شرکت سیمان شرق(سهامی عام)

اسنادمناقصه‌عمومی:

شناسایی تامین کننده و فروشنده معتبر و واجد شرایط جهت خرید ۳۱ ردیف اقلام مربوط به گیربکس سیاره ای مطابق خواسته های شرکت سیمان شرق و بشرح اسناد مناقصه.

شماره مناقصه :	۳۴۸۰۰۱
تاریخ :	

استان خراسان رضوی: مشهد- جاده کلات سه راهی سیمان-بعد از روستای فاز-مجتمع صنعتی سیمان شرق

تذکر: پرینت نقشه ها و مشخصات فنی پیوست(از صفحه ۲۹ به بعد) نیاز نمی باشد و صرفاً جهت اطلاع و استفاده پیشنهاد دهندگان می باشد.

اسناد مناقصه شماره ۳۴۸۰۰۱ مورخه۱۴۰۵/۰۶/۱۰درخصوص شناسایی تامین کننده و فروشنده معتبر و واجد شرایط جهت خرید ۳۱ ردیف اقلام مربوط به گیربکس سیاره ای تیپ فلندر(FLENDER TYPE: P2DA SIZE: 23)مطابق خواسته های شرکت سیمان شرق و بشرح اسناد مناقصه و نقشه و مشخصات فنی پیوست.

شرایط عمومی و اختصاصی شرکت در مناقصه

۱. موضوع مناقصه:

۱-۱) شناسایی تامین کننده معتبر و واجد شرایط جهت خرید ۳۱ ردیف اقلام مربوط به گیربکس سیاره ای مطابق خواسته های شرکت سیمان شرق و بشرح جدول ذیل و نقشه ها و مشخصات فنی پیوست.

Shargh Cement code	DESCRIPTION	QTY		Description	Material -Nr	Drawing Number	Flender code	
۱۱۴۳۰۴۰۵۶۹	قطعه پاپیونی ۱۰x۱۶۰x۶۵ C۲۵PTFE جهت گیربکس سیاره ای درایو کوره واحد ٤ ش نقشه P.N ۲۲۸ - ۸۸۹۸۱۱۶	PCS	۲	RING -ANLAUF۰۶۵*۱۶۰*۱۰ PTFE/۲۵C ۵۸۶۷۰۳۵/A TIE PIECE ۰۶۵*۱۶۰*۱۰ PTFE/۲۵C	۰۰۰.۰۰۰.۶۲۶.۱۵۷	۸۸۹۸۱۱۶	۲۲۸	۱
۱۱۴۳۰۴۰۵۷۰	چرخ دنده داخلی ۲۳PN جهت گیربکس سیاره ای درایو کوره واحد ٤ ش نقشه ۸۸۹۸۱۱۶ - P.N ۳۰۶	PCS	۲	STIRNARD,INVERZ PN۲۳ ۳٤CrNiMo۶ ۵۸۶۷۰۳۳/H INTERN.TOOTHED GEAR WHEEL PN۲۳	۰۰۰.۰۰۰.۸۰۷.۲۵٤	۸۸۹۸۱۱۶	۳۰۶	۲
۱۱۴۳۰۴۰۵۷۱	قطعه پاپیونی ۱۰x۳۱۵x۲۵۵ C۲۵PTFEجهت گیربکس سیاره ای درایو کوره واحد ٤ ش نقشه P.N ۳۲۸ - ۸۸۹۸۱۱۶	PCS	۲	RING-ANLAUF ۲۵۵X۳۱۵X۱۰ PTFE/۲۵C ۵۸۶۷۰٤۸/B TIE PIECE ۲۵۵X۳۱۵X۱۰ PTFE/۲۵C	۰۰۰.۰۰۰.۶۲۶.۱۶٤	۸۸۹۸۱۱۶	۳۲۸	۳
۱۱۴۳۰۴۰۵۷۲	پینیون سیاره ای ۲.۲۰/۲۳۱.۵GP ۱.۶۵۸ جهت گیربکس سیاره ای درایو کوره واحد ٤ ش نقشه ۸۸۹۸۱۱۶ - P.N ۳٤۱	PCS	٤	STIRD-PLA GP ۲۳۱,۵/۲,۲۰ ۱.۶۵۸۷ ۵۸۶۷۰۲٤/A PLANET PINION GP ۲۳۱,۵/۲,۲۰ ۱.۶۵۸	۰۰۰.۰۰۱.۲۶۰.۲۶۳	۸۸۹۸۱۱۶	۳٤۱	٤
۱۱۴۳۰۴۰۵۷۳	شافت میانی ۲۳۱GP جهت گیربکس سیاره ای درایو کوره واحد ٤ ش نقشه ۸۸۹۸۱۱۶ - P.N ۵۰۰	PCS	۲	STRDW-PLA GP ۲۳۱,۵/۲,۲۰ ۱.۶۵۸۷ ۵۸۶۷۹۶۳/B PLANETARY CYLINDRICAL WHEEL SHAFT GP ۲۳۱	۰۰۰.۰۰۱.۲۶۰.۲۶۵	۸۸۹۸۱۱۶	۵۰۰	۵
۱۱۴۳۰۴۰۵۷٤	دنده شافت میانی ۲۶۵.۰.۲.۲۷LP ۱.۶۵۸۷ جهت گیربکس سیاره ای درایو کوره واحد ٤ ش نقشه ۸۸۹۸۱۱۶ - P.N ۵۰۲	PCS	۲	STIRNRAD LP ۲۶۵,۰/۲,۲۷ ۱.۶۵۸۷ ۵۸۶۷۹۵۵/A GEAR WHEEL LP ۲۶۵,۰/۲,۲۷ ۱.۶۵۸۷	۰۰۰.۰۰۱.۲۵٤.۶۳٤	۸۸۹۸۱۱۶	۵۰۲	۶
۱۱۴۳۰۴۰۵۷۵	شافت پینیون ۲۶۵.۰.۲.۲۷RP ۱.۶۵۸۷ جهت گیربکس سیاره ای درایو کوره واحد ٤ ش نقشه P.N ۱۰۰ - ۸۸۹۸۱۱۶	PCS	٤	STRDWELLE RP ۲۶۵,۰/۲,۲۷ ۱.۶۵۸۷ ۵۸۶۷۹۵٤ PINION SHAFT RP ۲۶۵,۰/۲,۲۷ ۱.۶۵۸۷	۰۰۰.۰۰۱.۲۵٤.۵۸۳	۸۸۹۸۱۱۶	۱۰۰	۷
۱۱۴۳۰۴۰۵۷۶	هیدرو کوپلینگ ۳٤۲FAK جهت گیربکس کمکی درایو کوره واحد ٤ ش نقشه ۶۰۷۹۵۵٤	PC	۱	HYDRO COUPLING FAK۳٤۲		۶۰۷۹۵۵٤		۸

اسناد مناقصه شماره ۳۴۸۰۰۱ مورخه۱۴۰۵/۰۶/۱۰درخصوص شناسایی تامین کننده و فروشنده معتبر و واجد شرایط جهت خرید ۳۱ ردیف اقلام مربوط به گیربکس سیاره ای تیپ فلندر(FLENDER TYPE: P2DA SIZE: 23)مطابق خواسته های شرکت سیمان شرق و بشرح اسناد مناقصه و نقشه و مشخصات فنی پیوست.

۹	۱۳۵	۸۸۹۸۱۱۶	۰۰۰.۰۰۰.۷۸۱.۸۵۰	WDR ۱۳۰X۱۶۰X۱۵ BAUM W ۵۷۱۰ ۷۵FPM۵۸۵ SHAFT SEAL ۱۳۰X۱۶۰X۱۵ BAUM W ۵۷۱۰	۲	PCS	سیل شافت پینیون ۵۷۱۰BAUM W ۱۵x۱۶۰x۱۳۰ جهت گیربکس سیاره ای درایو کوره واحد ٤ ش نقشه ۸۸۹۸۱۱۶ - P.N ۱۳۵
۱۰	۱٤٦	۸۸۹۸۱۱۶	۰۰۰.۰۰۰.٦۳٦.۱۷۸	RING ۱۲۰,۰X۱۳۰,۰X۰٤۱,۵W ۳٤CrNiMo٦ ۵۸٦۷۰۵٤/E RING ۱۲۰,۰X۱۳۰,۰X۰٤۱,۵W ۳٤CrNiMo٦	۲	PCS	رینگ زیر سیل شافت پینیون ۰٦CRNIM۳٤ W٤۱.۵x۱۳۰x۱۲۰ جهت گیربکس سیاره ای درایو کوره واحد ٤ ش نقشه ۸۸۹۸۱۱۶ - P.N ۱٤٦
۱۱	۱٦۳	۸۸۹۸۱۱۶	۰۰۰.۰۰۰.۳٤۷.۲۱۲	RING,AS ۱٦۰/۰٦,۰X۱,۵ W ۵۷۳۰ FED-ST LAMELLAR RING, AS (FEY) ۱٦۰/۰٦,۰X۱,۵ W۵	٦	PCS	رینگ لاملار شافت پینیون AS ۱.۵x۰٦.۰/۱٦۰FEY ۵W جهت گیربکس سیاره ای درایو کوره واحد ٤ ش نقشه ۸۸۹۸۱۱۶ - P.N ۱٦۳
۱۲	۲۰٦	۸۸۹۸۱۱۶	۰۰۰.۰۰۱.۲۸۸.۵٤٦	STIRNRAD,INVERZ P۲ ۲۳ ۳٤CrNiMo٦ ۵۸٦۷۷۱۵/E INTERN.TOOTHED GEAR WHEEL P۲ ۲۳	۲	PCS	چرخ دنده داخلی ۲P ۲۳ جهت گیربکس سیاره ای درایو کوره واحد ٤ ش نقشه ۸۸۹۸۱۱۶ - P.N ۲۰٦
۱۳	۲۱۳	۸۸۹۸۱۱۶	۰۰۰.۰۰۰.۳٤۷.۰۰۵	RING,AS ۵۰۰/۱۲,۰X۲,۵ W ۵۷۳۰ FED-ST LAMELLAR RING, AS (FEY) ۵۰۰/۱۲,۰X۲,۵ W ۵	٦	PCS	رینگ لاملار خروجی شافت پینیون ۲.۵x۱۲.۰/۵۰۰AS FEY ۵W جهت گیربکس سیاره ای درایو کوره واحد ٤ ش نقشه ۸۸۹۸۱۱۶ - P.N ۲۱۳
۱٤	۲۲۰	۸۸۹۸۱۱۶	۰۰۰.۰۰۰.۷۷۰.٤۰۳	WDR ٤٦۰X۵۰۰X۲۰ C D ۳۷٦۰ ۷۲NBR۹۰۲ SHAFT SEAL ٤٦۰X۵۰۰X۲۰ C D ۳۷٦۰ ۷۲NBR۹۰۲	۲	PCS	سیل شافت خروجی C D ۲۰x۵۰۰x٤٦۰ ۹۰۲NBR۳۷٦۰۷۲ جهت گیربکس سیاره ای درایو کوره واحد ٤ ش نقشه ۸۸۹۸۱۱۶ - P.N ۲۲۰
۱۵	۲۲۷	۸۸۹۸۱۱۶	۰۰۰.۰۰۱.۲۵٤.۵۸۵	STIRD-PLA GP ۲۷۲,٤/۱,۷٦ ۱.٦۵۸۷ ۵۸٦۷۰۰٤/K PLANET PINION GP ۲۷۲,٤/۱,۷٦ ۱.٦۵۸۷	۲	PCS	پینیون سیاره ای ۱.۷٦/۲۷۲.٤GP ۱.٦۵۸۷ جهت گیربکس سیاره ای درایو کوره واحد ٤ ش نقشه ۸۸۹۸۱۱۶ - P.N ۲۲۷
۱٦	۳۰۰	٦۰۰۸٦۱٦	۰۰۰.۰۰۰.٦۷۵.۷۷۵	STRDELLE R ۱۸۵.۰/۳.۹٤ ۱.٦۵۸۷ ۵۸۷۵۷۷۵/A PINION SHAFT R ۱۸۵.۰/۳.۹٤ ۱.٦۵۸۷	۱	PC	شافت پینیون راست گرد ۱۸۵R ۳.۹٤/۰. ۱.٦۵۸۷ جهت گیربکس سیاره ای درایو کمکی کوره واحد ٤ ش نقشه ٦۰۰۸٦۱٦ - P.N ۳۰۰
۱۷	۳۰۲	٦۰۰۸٦۱٦	۰۰۰.۰۰۰.٦۷۵.۷۵۲	STIRNARD L ۲۲۰.۰/٤.۸۹ ۱.٦۵۸۷ ۵۸۷۵۷۵۲/B GEAR WHEEL L ۲۲۰.۰/٤.۸۹ ۱.٦۵۸۷	۱	PC	چرخ دنده چپ گرد ۲۲۰L ٤.۸۹/۰. ۱.٦۵۸۷ جهت گیربکس سیاره ای درایو کمکی کوره واحد ٤ ش نقشه ٦۰۰۸٦۱٦ - P.N ۳۰۲
۱۸	٤۰۰	٦۰۰۸٦۱٦	۰۰۰.۰۰۰.٦٦٦.۵۱۲	STRDELLE L ۱۵۷.۰/۲.۳۱ ۱.٦۵۸۷ ۵۸۸٦۵۱۲ PINION SHAFT L ۱۵۷.۰/۲.۳۱ ۱.٦۵۸۷	۱	PC	شافت پینیون چپ گرد ۱۵۷L ۲.۳۱/۰. ۱.٦۵۸۷ جهت گیربکس سیاره ای درایو کمکی کوره واحد ٤ ش نقشه ٦۰۰۸٦۱٦ - P.N ٤۰۰
۱۹	٤۰۲	٦۰۰۸٦۱٦	۰۰۰.۰۰۰.٦٦٦.۵۱۳	STIRNARD R ۱۵۷.۰/۲.۳۱ ۱.٦۵۸۷ ۵۸۸٦۵۱۳ GEAR WHEEL R ۱۵۷.۰/۲.۳۱ ۱.٦۵۸۷	۱	PC	چرخ دنده راست گرد ۱۵۷R ۲.۳۱/۰. ۱.٦۵۸۷ جهت گیربکس سیاره ای درایو کمکی کوره واحد ٤ ش نقشه ٦۰۰۸٦۱٦ - P.N ٤۰۲

اسناد مناقصه شماره ۳۴۸۰۰۱ مورخه۱۴۰۵/۰۶/۱۰درخصوص شناسایی تامین کننده و فروشنده معتبر و واجد شرایط جهت خرید ۳۱ ردیف اقلام مربوط به گیربکس سیاره ای تیپ فلندر(FLENDER TYPE: P2DA SIZE: 23)مطابق خواسته های شرکت سیمان شرق و بشرح اسناد مناقصه و نقشه و مشخصات فنی پیوست.

۲۰	۲۸۱	۶۰۰۸۶۱۶	۰۰۰.۰۰۰.۳۸۹.۰۱۶	RS FXM ۲۰۰-۶۳SX/H۱۰۰ W ۵۸۱۳ ST BACKSTOP FXM ۲۰۰-۶۳SX/H۱۰۰ W ۵۸۱۳ ST	۲	PCS	بک استاپ گیربکس FXM-۲۰۰ ST۵۸۱۳W ۱۰۰x/H۶۳ جهت گیربکس سیاره ای درایو کمکی کوره واحد ٤ ش نقشه ۶۰۰۸۶۱۶ - P.N ۲۸۱	۱۱٤۳۰٤۰۵۹۵
۲۱	۱۰۰	۶۰۰۸۶۱۶	۰۰۰.۰۰۱.۲۶۰.۰۹٤	STRDWELLE DV۹.۰۳X۵V۷ ۱.۶۵۸۷ ۶۰٤۶۳۵٤/A PINION SHAFT DV۹.۰۳X۵V۷ ۱.۶۵۸۷	۲	PCS	شافت پینیون V۹D ۵V۷x۰.۳ ۱.۶۵۸۷ جهت گیربکس درایو کمکی کوره واحد ٤ ش نقشه ۶۰۰۸۶۱۶ - P.N ۱۰۰	۱۱٤۳۰٤۰۵۹۶
۲۲	۱۰۲	۶۰۰۸۶۱۶	۰۰۰.۰۰۰.۵۶۰.۸٤۲	STIRNARD R ۱۳۰.۰/۲.۵٤ ۱.۶۵۸۷ ۵۸۸۰۸٤۲/B GEAR WHEEL R ۱۳۰.۰/۲.۵٤ ۱.۶۵۸۷	۲	PCS	چرخ دنده راست گرد R۱۳۰ ۲.۵٤/۰. ۱.۶۵۸۷ جهت گیربکس درایو کمکی کوره واحد ٤ ش نقشه ۶۰۰۸۶۱۶ - P.N ۱۰۲	۱۱٤۳۰٤۰۵۹۷
۲۳	۱۲۳	۶۰۰۸۶۱۶	۰۰۰.۰۰۰.۲٤۳.۳۲۳	O-RING OR۰۰۷٤ -۰۳ W۵V۱۳ V۲NBR۸V۲	٤	PCS	اورینگ OR۰۰۷٤-۰۳ ۵V۱۳W ۸V۲NBRV۲ جهت گیربکس درایو کمکی کوره واحد ٤ ش نقشه ۶۰۰۸۶۱۶ - P.N ۱۲۳	۱۱٤۳۰٤۰۵۹۸
۲٤	۱۳۳	۶۰۰۸۶۱۶	۰۰۰.۰۰۰.۳۰۶.۰۵۲	WDR ۰۵۵*۰۷۰*۰۸ BAUMSL W ۵V۱۰ V۵FPM۵۸۵ SHAFT SEAL ۰۵۵*۰۷۰*۰۸ BAUMSL W ۵V۱۰	٦	PCS	سیلینگ شافت ۰۸x۰۷۰x۰۵۵ ۵V۱۰BAUMSL W جهت گیربکس درایو کمکی کوره واحد ٤ ش نقشه ۶۰۰۸۶۱۶ - ۱۳۲ - P.N ۱۳۳- P.N ۲۳۳P.N	۱۱٤۳۰٤۰۵۹۹
۲۵	۱۳٤	۶۰۰۸۶۱۶	۰۰۲.۹۰۰.۰۷۶.۶۰۶	WDR ۵۵*V۰*۱۰ BAUM W ۵V۱۰ V۵FKM۵۸۵ SHAFT SEAL ۵۵*V۰*۱۰ BAUM W ۵V۱۰ V۵FKM۵۸۵	٤	PCS	رینگ لاملار ۱۰x۰۷۰x۰۵۵ ۵۸۵FKM V۵ ۵V۱۰BAUMSL W جهت گیربکس درایو کمکی کوره واحد ٤ ش نقشه ۶۰۰۸۶۱۶ - P.N ۱۳٤	۱۱٤۳۰٤۰۶۰۰
۲۶	۱۳۵	۶۰۰۸۶۱۶	۰۰۰.۰۰۰.۳٤۷.۱۹۹	RING.AS ۰۷۰/۰۳.۱X۰.۸۲ W۵V۳۰ FED-ST LAMELLAR RING .AS FEY ۰۷۰/۰۳.۱X۰.۸۲ W	٦	PCS	رینگ لاملار AS FEY ۰۳/۰۷۰ . W ۰.۸۲x۱ جهت گیربکس درایو کمکی کوره واحد ٤ ش نقشه ۶۰۰۸۶۱۶ - P.N ۱۳۵	۱۱٤۳۰٤۰۶۰۱
۲۷	۱۳۶	۶۰۰۸۶۱۶	۰۰۰.۰۵۰.۰۲۷.۶۵۲	WDR ٤۲*۶۲*۸ BAUM V۵FPM۵۸۵ SHAFT SEAL ٤۲*۶۲*۸ BAUM V۵FPM۵۸۵	٤	PCS	سیلینگ شافت BAUM ۸x۶۲x٤۲ V۵ ۵۸۵FPM جهت گیربکس درایو کمکی کوره واحد ٤ ش نقشه ۶۰۰۸۶۱۶ - P.N ۱۳۶	۱۱٤۳۰٤۰۶۰۲
۲۸	۲۰۰	۶۰۰۸۶۱۶	۰۰۰.۰۰۱.۲۵۵.۲٤۷	WELLE D۱۰۹X۸۰۳ ۳٤CRNIMO ۶ K۳/K٤ ۰۶ SHAFT D۱۰۹X۸۰۳ ۳٤CRNIMO ۶ K۳/K٤ ۰۶	۲	PCS	شافت D۱۰۹x۸۰۳ ۰۶ ٤/K۳K ۰۶CRNIM۳٤ جهت گیربکس درایو کمکی کوره واحد ٤ ش نقشه ۶۰۰۸۶۱۶ - ۲۰۰ P.N	۱۱٤۳۰٤۰۶۰۳
۲۹	۵	۵۲V۳V۷٤	۰۰۰.۰۰۰.۶۵۰.۵۹۱	REIBBELAG FB ۱۸۰ ۵۰۲۲ SH FRICTION LINING FB ۱۸۰ ۵۰۲۲ SH	۸	PCS	لاینر اصطکاکی ترمز FB ۱۸۰ ۵۰۲۲ SH جهت درایو کمکی کوره واحد ٤ ش نقشه ۵۲V۳V۷٤	۱۱٤۳۰٤۰۶۰٤
۳۰	۱۰	۵۲V۳V۷٤	۰۰۰.۰۰۱.۲۵۹.۰۰۸	FED-Z ۳,۶X۱٤,٤x۸,۵ ۱.٤۳۱۰ ۶۰٤۵۵۰۶/-TENSION SPRING ۳,۶X۱٤,٤x۸,۵ ۱.٤۳۱۰	۸	PCS	فنر فشاری ترمز ۸.۵X۱٤.٤x۳.۶ ۱.٤۳۱۰ جهت درایو کمکی کوره واحد ٤ ش نقشه ۵۲V۳V۷٤	۱۱٤۳۰٤۰۶۰۵

اسناد مناقصه شماره ۳۴۸۰۰۱ مورخه۱۴۰۵/۰۶/۱۰درخصوص شناسایی تامین کننده و فروشنده معتبر و واجد شرایط جهت خرید ۳۱ ردیف اقلام مربوط به گیربکس سیاره ای تیپ فلندر(FLENDER TYPE: P2DA SIZE: 23)مطابق خواسته های شرکت سیمان شرق و بشرح اسناد مناقصه و نقشه و مشخصات فنی پیوست.

۳۱	۸۰۱	۸۸۹۸۱۱۶	۰۰۰.۰۰۱.۲٥٤.۸۲۷	STRDWELLE RP ۲٦٥,۰/۲,۲۷ ۱.٦٥۸۷ ٦۰٤۱۹۸٥/A PINION SHAFT RP ۲٦٥,۰/۲,۲۷ ۱.٦٥۸۷	۲	PCS	دنده شافت میانی ۱.٦٥۸۷ ۲٦٥.۰.۲.۲۷RP جهت گیربکس سیاره ای درایو کوره واحد ٤ ش نقشه ۸۸۹۸۱۱٦ - P.N ۸۰۱	۱۱٤۳۰٤۰٦۳٥

۲. مناقصه گزار:

شرکت سیمان شرق واقع در استان خراسان رضوی، شهرستان مشهد- خیابان دانشگاه ۱۵-اسرار۱/۲-پلاک ۴۷–طبقه دوم – امور قراردادها کد پستی ۹۱۳۸۸۴۵۱۶۴ تلفن۳۸۴۸۰۳۶۵-۰۵۱ نمابر ۳۸۴۴۹۹۶۰-۰۵۱ آدرس اینترنتی **www.sharghcement.ir**

۳. محل برگزاری مناقصه:

استان خراسان رضوی: شهرستان مشهد- خیابان دانشگاه ۱۵- اسرار ۱/۲- پلاک ۴۷

۴. مدت انجام موضوع مناقصه:

مدت‌زمان تحویل اقلام‌موضوع‌مناقصه از مورخه.....لغایت.....به مدت ..... ماه تمام شمسی می‌باشد.

۵. شرایط داوطلبین شرکت در مناقصه:

۱-۵) داشتن شخصیت حقیقی یا حقوقی و در اختیار داشتن امکانات فنی و اجرائی، مدیریتی، توانایی مالی، تجربیات مفید و مکفی در زمینه موضوع مناقصه الزامی می باشد .

۲-۵) داشتن صلاحیت معتبر از مراجع ذیصلاح در رشته مرتبط با موضوع مناقصه بعنوان امتیاز مثبت در ارزیابی کیفی مناقصه گر محسوب می گردد و ارزیابی کیفی منوط به ارائه مدارک معتبر خواسته شده می باشد.

۶. مهلت دریافت اسناد از مناقصه گر:

اسناد مناقصه از روز سه شنبه مورخ ۱۴۰۵/۰۶/۱۰ تا روز شنبه مورخ۱۴۰۵/۰۶/۲۸به مدت ۱۹ روز تقویمی درسایت اینترنتی شرکت سیمان شرقwww.sharghcement.ir قسمت مزایده و مناقصه قابل برداشت می باشد.

توضیح ۱ : جهت امکان تماس بمنظور اعلام تغییرات احتمالی اسناد مناقصه، مناقصه گر باید همزمان‌با دریافت اسناد از سایت، کتباً دریافت اسناد مناقصه را به مناقصه‌گزار به شماره نمابر ۳۸۴۴۹۹۶۰-۰۵۱ اعلام نماید.درغیراینصورت ادعای عدم اطلاع از تغییرات احتمالی ، مسموع نخواهد بود.

۷. آخرین مهلت تسلیم پیشنهادها توسط مناقصه گر به مناقصه گزار:

آخرین مهلت تسلیم پیشنهادها پایان وقت اداری روز شنبه مورخ ۱۴۰۵/۰۶/۲۸ می باشد به پیشنهادهای واصله پس از مهلت مقرر ترتیب اثرداده نخواهد شد.

۸.نشانی محل تسلیم پیشنهادها:

شرکت سیمان شرق واقع در استان خراسان‌رضوی،شهرستان مشهد–خیابان دانشگاه۱۵-اسرار۱/۲- پلاک ۴۷ –کد پستی ۹۱۳۸۸۴۵۱۶۴- امور قراردادهای شرکت سیمان شرق می باشد. تمام اوراق اسناد مناقصه ، باید به امضاء مجاز تعهدآور و مهر شرکت مناقصه گر برسد و همراه با پیشنهاد قیمت به‌ترتیب ذکر شده در ماده ۱۲ تسلیم شود.

توضیح ۲: جهت اطلاع از تغییرات احتمالی در اسناد مناقصه، ضروریست داوطلبین قبل از ارسال اسناد و مدارک، به سایت شرکت سیمان شرق

اسناد مناقصه شماره ۳۴۸۰۰۱ مورخه۱۴۰۵/۰۶/۱۰درخصوص شناسایی تامین کننده و فروشنده معتبر و واجد شرایط جهت خرید ۳۱ ردیف اقلام مربوط به گیربکس سیاره ای تیپ فلندر(FLENDER TYPE: P2DA SIZE: 23)مطابق خواسته های شرکت سیمان شرق و بشرح اسناد مناقصه و نقشه و مشخصات فنی پیوست.	

مراجعه نموده و یا با شماره تلفن ۳۸۴۸۰۳۶۵-۰۵۱ تماس حاصل فرمایند. بدیهی استارسال و تحویل اسناد بمعنی اطلاع از آخرین تغییرات در اسناد مناقصه می باشد.

۹.تاریخ گشایش پاکتهای مناقصه:

حداکثر۱۰روزکاری پس از پایان تاریخ مهلت تحویل اسناد ، در اولین روز جلسه بازگشایی پاکات شرکت سیمان شرق ، ابتدا پاکت الف بازگشایی شده و در صورت تایید ، نسبت به بازگشایی پاکت ب اقدام خواهد شد و سپس اسناد مربوطه جهت ارزیابی ، تحویل کمیته ارزیابی خواهد شد.

۱۰.تسلیم اسناد مناقصه:

اسناد مناقصه که بر طبق شرایط مناقصه و ضوابط مربوط باید به ترتیب زیر در پاکت‌های الف و ب و ج بصورت در بسته و لاک و مهر شده تسلیم شود به شرح ذیل می‌باشد.

۱-۱۰) پاکت الف (سپرده ضمانت شرکت در مناقصه)شامل:

سپرده ضمانت شرکت درمناقصه به مبلغ۲۰.۰۰۰.۰۰۰.۰۰۰ (ریال)(بیست میلیارد ریال) می باشد که می تواند به روشهای ذیل ارائه شود : به صورت ضمانتنامه بانکی معتبر و بدون قیدو شرط با قید قابلیت ضبط، برداشت، مشروط نبودن و برگشت ناپذیر با مدت اعتبار سه ماه و قابل تمدید به دفعات بنا به درخواست مناقصه گزار(شناسه ملی ۱۰۱۰۰۲۳۳۷۲۵و شماره ثبت ۴۵۹۲۸ تاریخ ثبت ۱۳۹۱/۰۵/۲۸) و یا فیش واریزی نقدی به مبلغ مذکوربه حساب شماره۰۲۰۲۰۲۲۴۲۴۰۰۳ نزد بانک صادرات شعبه چهارراه گلستان مشهد با شماره شبا IR۰۹ ۰۱۹۰ ۰۰۰۰ ۰۰۲۰ ۲۰۲۲ ۴۲۴۰ ۰۳ و یا به صورت چک بانکی معتبر به نام مناقصه گر و ثبت شده در سامانه صیاد و در وجه شرکت سیمان شرق و به تاریخ روز و یا سفته بانکی به نام شرکت سیمان شرق که بایستی در داخل پاکت (الف) گذاشته شده و پاکت مذکور را بصورت مهرولاک شده ، تحویل نمایند.

توضیح۳: ضروری است کپی ضمانت نامه بانکی یا کپی فیش واریزی و یا چک ویا سفته با ذکر شماره مناقصه روی پاکت الف چسبانده شود تا درصورت کامل بودن پاکت الف نسبت به دریافت الباقی اسناد اقدام شود.

۲-۱۰) پاکت ب (ارزیابی) شامل:

۱-۲-۱۰) ارائه رونوشت اساسنامه و اظهارنامه و آخرین آگهی روزنامه رسمی کشور به همراه آگهی تأسیس شرکت مناقصه گر برای شخص حقوقی و ارائه رونوشت کپی شناسنامه و کارت ملی و مدارک هویتی بهمراه ارائه جواز کسب معتبر برای اشخاص حقیقی .

۲-۲-۱۰) آگهی آخرین تغییرات در مورد دارندگان امضاء مجاز پیشنهاد دهنده برای اسناد مالی و تعهد آور.

۳-۲-۱۰) ارائه مشخصات دارندگان امضاء تعهدآور بهمراه گواهی محضری نمونه امضاء. (مهم و الزامی می باشد).

۴-۲-۱۰) تأییدیه اداره ثبت شرکتها و موسسات غیرتجاری مبنی بر موجودیت و عدم انحلال شرکت پیشنهاد دهنده.

۵-۲-۱۰) مهر و امضاء تعهد نامه اشاره شده در پیوست شرایط این مناقصه توسط صاحبان امضاء مجاز.

۶-۲-۱۰) پیش نویس قرارداد بدون ذکر مبلغ و امضا و تایید شده توسط صاحبین امضای مجاز در قرارداد .

۷-۲-۱۰) کاتالوگهای مربوطه و همچنین کلیه اطلاعات فنی مورد نیاز و به کار گرفته شده در تامین مواد اولیه برای ساخت اقلام موضوع مناقصه.

۸-۲-۱۰) برنامه زمانبندی تحویل اقلام.

۹-۲-۱۰)کلیه اسناد و مدارک و گواهینامه های کیفیت و دستورالعملها و استانداردهای ملی (تأییدیه استاندارد ایران و سایر تأییدیه ها) و همچنین مدارک مربوط حسن سابقه ، امکانات ، دانش فنی (چه آنهایی که ضمیمه اسناد مناقصه بوده و چه آنهایی که پیشنهاد دهنده به عنوان بخشی از پیشنهاد خود تهیه و ضمیمه اسناد نموده است).

۱۰-۲-۱۰) تکمیل نمودن و ارائه فرم مشخصات اعضاء هیات مدیره مناقصه گر و تصویر شناسنامه و کارت ملی مدیر عامل شرکت و صاحبان امضاء مجاز جهت اشخصاص حقوقی.

۱۲-۲-۱۰) تصویر گواهی کد اقتصادی فعال و شناسه ملی مناقصه گر.

۱۳-۲-۱۰) ارائه صلاحیت معتبر از مراجع ذیصلاح مرتبط با موضوع مناقصه.

۱۴-۲-۱۰) ارائه سوابق کاری مرتبط با موضوع مناقصه در ۵ سال گذشته یا بیشتر. (ارائه تصویر صفحات مربوط به مشخصات طرفین قرارداد ، تاریخ قرارداد مدت و مبلغ انجام کار بصورت خوانا و واضح الزامی می باشد) .

۱۵-۲-۱۰) کلیه صفحات اسناد مناقصه و متن پیش نویس قرارداد، به مهر شرکت ممهور و به امضاء صاحبان امضاء تعهدآور شرکت رسیده باشد.

۱۶-۲-۱۰) هرنوع مکاتبه و اسناد ومدارکی که درصورت تغییر، اصلاح یا تجدید نظردر اسناد و مشخصات مناقصه از جانب دستگاه مناقصه گزار ابلاغ شود.

۱۸-۲-۱۰) درصورتیکه مناقصه گر نماینده شرکت فروشنده خارج از ایران می باشد باید نمونه مشارکت نامه یا قرارداد کنسرسیوم ضمیمه اسناد شود .

توضیح۴ : مناقصه گرضمن مطالعه دقیق شرایط مناقصه ، بایدمستندات ومدارک خواسته شده را به ترتیب توضیح داده شده فوق تنظیم و مرتب و ارائه نماید.

توضیح۵ :کلیه اسناد و مدارک مذکور در داخل پاکت ها باید به امضاهای اصلی مجاز و تعهدآور و مهر شرکت مناقصه گر رسیده باشد.تمام اسناد و مدارک باید به نام شرکت مناقصه گر بوده و استفاده از اسناد سایر شرکتها ممنوع است.

۳-۱۰) پاکت ج (پیشنهاد قیمت) شامل :

برگ پیشنهاد قیمت و جدول مندرج در فرم پیشنهاد قیمت مناقصه که در چارچوب اسناد مناقصه تکمیل شده و به مهر و اصل امضاء صاحبان مجاز امضاء مناقصه گر رسیده است .

توضیح ۶ :لازم به ذکر است جهت جلوگیری از فاش شدن قیمت از درج مبلغ پیشنهادی در متن پیش نویس قرارداد جداً خودداری گردد و فقط در برگ پیشنهاد قیمت ذکر شود .

توضیح ۷: در روی هر کدام از سه پاکت اسناد مناقصه که بصورت در بسته و لاک و مهر شده تحویل می شود ، باید موضوع مناقصه با ذکر شماره مناقصه و نام و نشانی مناقصه گر نوشته شده باشد و در مهلت مقرر این اسناد را به امور قراردادهای شرکت سیمان شرق در قبال أخذ رسید ، تحویل نماید. منظور از پیشنهاد مناقصه تمام اسناد و مدارک مشروح در بند های فوق‌الذکر است که حسب مورد درداخل یکی ازسه پاکت الف، ب و ج قرار داده می‌شود. ضمنا اسناد و مدارک و پیشنهادات تحویلی مسترد نخواهد شد.

۱۱.گشایش پاکات پیشنهادها:

حداکثر ۱۰روزکاری پس از پایان تاریخ مهلت تحویل اسناد ، در اولین روز بازگشایی پاکات شرکت سیمان شرق ، ابتدا پاکت **الف** بازگشایی شده و درصورت تایید ، نسبت به بازگشایی پاکت **ب** اقدام خواهد شد و جهت ارزیابی تحویل کمیته ارزیابی خواهد شد.پس از ارزیابی(حداکثر

۱۰روزکاری بعد از تحویل اسناد ارزیابی) در جلسه بعدی بازگشایی پاکات شرکت سیمان شرق نسبت به بازگشایی پاکت ج (برای شرکتهایی که بلحاظ ارزیابی فنی تایید شده اند) اقدام خواهد شد و نتیجه حاصله بعد از تصویب در کمیسیون معاملات و هیات مدیره شرکت سیمان شرق و ظرف مدت ۲۰روز کاری بعد از بازگشایی پاکات ج به پیشنهاد دهندگان اعلام خواهد شد . ضمنا امکان حضور پیشنهاد دهندگان در روز بازگشایی پاکات میسر نمی باشد .

۱۲. نحوه تکمیل و ارائه پیشنهادها:

۱-۱۲- مبلغ پیشنهاد قیمت برای موضوع مناقصه باید به عدد و به حروف ، فقط در برگ پیشنهاد قیمت برای مناقصه نوشته شده و بعد از امضاء صاحبان امضاء مجاز (اصل امضاء) ، مهمور به مهر شرکت مناقصه گر شده باشد و برای تعیین برنده مناقصه صرفاً مبلغ کل بصورت ناخالص و بدون احتساب مالیات بر ارزش افزوده که به حروف نوشته شده ملاک عمل خواهد بود.

۲-۱۲- پیشنهاد دهنده باید نسبت به ارائه جزئیات پیشنهاد قیمت همراه با فرم پیشنهاد قیمت در داخل پاکت"ج"اقدام نموده و ارائه نماید.

۳-۱۲- در صورت مشاهده اختلاف بین مبلغ ارائه شده به حروف و به عدد ، مبلغ درج شده به حروف جهت تعیین برنده و سپس عقد قرارداد بر اساس آن مورد عمل خواهد بود.

۴-۱۲ –پیشنهادهای قیمت برای مناقصه باید از هر حیث کامل و بدون قید و شرط بوده و هیچ نوع ابهام، خدشه، عیب، نقص و قلم خوردگی نداشته باشد. در صورت وجود خدشه یا نقص، یا ارائـه پیشنهاد مشروط، مبهم و بر خلاف شرایط مناقصه، آن پیشنهاد مردود و غیر قابل قبول اعلام شده و مطابق با ماده ۱۴ شرایط اسناد مناقصه عمل می گردد .

۵-۱۲-هر یک از مناقصه گران که نسبت به مفهوم اسناد و مدارک مناقصه ابهامی داشته یا اختلافی در اسناد ملاحظه کنند یا متوجه از قلم افتادگی مشخصات یا اسناد دیگری گردد یا در مورد معانی آنها دچار تردید شود باید حداکثر تا سه روز قبل از پایان مهلت تحویل اسناد مراتب را کتباً به دستگاه مناقصه گزار اطلاع داده و تقاضای توضیح کتبی نمایند. به درخواستها و سؤالات مطرح شده از طرف مناقصه گر بعد از مهلت مقرر به هیچ عنوان پاسخ داده نخواهد شد و در هر حال پس از تحویل اسناد هیچ عذری پذیرفته نخواهد بود.

۶-۱۲ -چنانچه پس از دریافت اسناد مناقصه از مناقصه گزار، مایل به مشارکت در مناقصه نبودید، اعلام انصراف خود را کتباً تا سه روز قبل از آخرین مهلت تحویل اسناد به مناقصه گزار اعلام نمایید.

۷-۱۲-پس از تحویل اسناد مناقصه به مناقصه گزار، داوطلب شرکت در مناقصه حق انصراف از مناقصه را ندارد .بدیهی است اعلام انصراف بعد از مهلت تعیین شده مورد قبول نمی باشد.

۸-۱۲-هرگونه پاسخ به سئوالات مطرح شده از طرف هر مناقصه گر و توضیح یا تجدید نظر یا حذف و اضافه نمودن اسناد و مدارک مناقصه و نحوه تغییر و تسلیم آنها، کتباً از سوی دستگاه مناقصه گزار به همه مناقصه گران (که کتباً دریافت اسناد مناقصه را به مناقصه گزار اعلام نمودند) اعلام خواهد شد و جزو اسناد و مدارک مناقصه منظور خواهد شد و در صورتیکه هیچ نوع تغییری از سوی مناقصه گزار اعلام نشود، مناقصه گران باید بر اساس اسناد دریافتی پیشنهاد خود را تسلیم نمایند.

۹-۱۲– مناقصه گزار این حق را برای خود محفوظ میدارد که قبل از انتخاب برنده مناقصه و یا ابلاغ و واگذاری قرارداد، صحت و سقم اطلاعات ارائه شده از سوی مناقصه گر را بررسی کند و مناقصه گر با تسلیم پیشنهاد، این حق بررسی را از سوی مناقصه گزار می پذیرد و برنده مناقصه بر اساس بررسیهای مناقصه گزار بر روی آنالیز قیمت پیشنهادی و مستندات ارسالی توسط مناقصه گر و همچنین نتیجه بررسی و صحت و سقم اطلاعات ارائه شده تعیین می گردد.

۱۰-۱۲–مناقصه گزار حق دارد هر یک از پیشنهادها را قبول یا رد کرده و یا مناقصه را در هر مرحله ای لغو نماید و تمام پیشنهادها را در هر

زمان رد کند و از این بابت، هیچگونه مسئولیت و تعهدی را در برابر مناقصه گران نخواهد داشت. در صورت لغو مناقصه، مناقصه گزار، مناقصه گران را از تصمیم خود مطلع می سازد و مناقصه گران حق هیچگونه اعتراضی در این خصوص نداشته و ادعای هر گونه ضرر و زیان را از خود سلب می نمایند.

۱۱-۱۲- چنانچه به هر دلیلی اخذ تصمیم در جلسه گشایش پاکت میسر نگردد، ادامه بررسی ها به جلسه بعدی کمیسیون معاملات موکول شده و پیشنهاد دهندگان حق اعتراض نخواهند داشت.

۱۲-۱۲-پیشنهادها باید طبق فرم پیشنهاد قیمت و سایر اسناد مناقصه، بدون هیچگونه تغییری توسط مناقصه گر تکمیل و تسلیم مناقصه گزار گردد.

۱۳-۱۲– مناقصه گزار حق تغییر، یا اصلاح یا تجدید نظر یا حذف در اسناد مناقصه را قبل از تاریخ بازگشایی پیشنهادها (پاکت الف، ب و ج) برای خود محفوظ می دارد و اگر چنین موردی پیش آید مراتب به مناقصه گرانی که دریافت اسناد مناقصه را کتباً به مناقصه گزار اعلام نموده اند. کتباً اعلام میشود و در صورتیکه پیشنهادی قبل از ابلاغ مراتب مزبور تسلیم شده باشد، پیشنهاد دهنده حق دارد تقاضای استرداد آنرا بنماید. از آنجا که ممکن است اصلاح و تجدید نظر در اسناد و مشخصات مستلزم تغییر مقادیر یا قیمتها باشد، در این صورت مناقصه گزار آخرین مهلت دریافت پیشنهادها را با اعلام کتبی به پیشنهاد دهندگان اعلام خواهد نمود.

۱۴-۱۲- امضاء کلیه اوراق مناقصه همراه با پیش نویس قرارداد و برگه پیشنهاد قیمت به منزله قبول کلیه شرایط توسط مناقصه گر و همچنین شرکت در مناقصه و دادن پیشنهاد به منزله قبول اختیارات و تکالیف دستگاه مناقصه گزار می باشد.

۱۵-۱۲-در صورتیکه تمام صفحات اسناد و مدارک مناقصه به امضای مجاز مناقصه گر نرسیده باشد تسلیم پیشنهاد به منزله قبول تمام شرایط و مشخصات اسناد و مدارک مناقصه از طرف مناقصه گر تلقی خواهد شد و هرگونه اعتراضی نسبت به عدم قبولی هر بند از شرایط عمومی یا اختصاصی مناقصه و یا پیش نویس قرارداد مورد تایید نمی باشد . ضمنا کمیسیون معاملات مناقصه گزار می تواند مناقصه گر را از ادامه فرآیند مناقصه حذف نماید.

۱۳. اعتبار پیشنهاد:

پیشنهاد قیمتها باید از هر حیث برای مدت ۳ ماه از تاریخ پیشنهاد معتبر باشد .

۱۴.صراحت پیشنهاد :

پیشنهادها باید صریح و بدون اعلام قید و شرط تهیه و تسلیم گردد. به پیشنهادهای ارائه شده که مبهم و مشروط و مخدوش باشند،ترتیب اثر داده نخواهد شد و دراینصورت سپرده شرکت درمناقصه ایشان به نفع مناقصه گزار(شرکت سیمان شرق)ضبط می گردد و حق هرگونه ادعا و اعتراضی را از خودسلب می نمایند.

۱۵. هزینه های پیشنهاد:

مناقصه گزار تعهدی در رابطه با جبران هزینه هایی که مناقصه گر برای تهیه و ارائه پیشنهاد متحمل شده است ، ندارد . ضمنا هزینه های چاپ آگهی در روزنامه های رسمی و هزینه های کارشناس رسمی نیز برعهده برنده مناقصه می باشد .

۱۶ . مالیاتها ، عوارض و بیمه های اجتماعی :

هزینه هرگونه عوارض، مالیات (به استثناء مالیات بر ارزش افزوده) وحق بیمه تأمین اجتماعی و غیره ازهرنوع که به این قراردادتعلق گیرد، به عهده مناقصه گر میباشد و درمورد مقررات مربوط به کارگران طبق قانون کار و بیمه های اجتماعی(آخرین مصوبات و قوانین مربوط دراین مورد) ملاک عمل خواهد بود.

۱۷ . انتخاب برنده مناقصه

۱-۱۷- طبق شرایط مناقصه و بر اساس بررسی مدارک و مستندات ارائه شده توسط مناقصه گر و قیمت کل پیشنهادی و بررسی آنالیز قیمت پیشنهادی برای اقلام موضوع مناقصه و رعایت صرفه و صلاح شرکت سیمان شرق تعیین می گردد. در ضمن هیچ پیشنهاد دهنده ای بعنوان برنده محسوب

نمی گردد مگر اینکه شرکت سیمان شرق بر مبنای ضوابط خود، کتباً مراتب را به وی ابلاغ نماید، از سوی دیگر تا قبل از انعقاد قرارداد و دریافت ضمانت نامه های لازم برای عقد قرارداد ، برای برنده مناقصه هیچ حقی متصور نیست و صرف اعلام برنده قبل از انعقاد قرارداد هیچ گونه حقی برای پیشنهاد دهنده و برنده مناقصه و تکلیفی برای مناقصه گزار ایجاد نمی کند . ضمنا شرکت سیمان شرق تا یکماه بعد از ابلاغ به برنده مناقصه حق فسخ مناقصه را برای خود به هر دلیلی ، بدون انجام تشریفات قانونی و اخذ احکام قضایی قائل می دارد و برنده مناقصه باعلم به این موضوع و پذیرش حق فسخ و تایید و تنفیذ آن با امضای اسناد مناقصه ، حق اعتراض خویش را سلب و ساقط می نماید .

۲-۱۷- چنانچه حداقل ۲ مناقصه گر تواما حائز شرایط برنده مناقصه باشند ، تصمیم کمیسیون معاملات تعیین کننده برنده مناقصه می باشد.

۳-۱۷- برنده مناقصه موظف است ظرف مدت هفت روز کاری از تاریخ ابلاغ با مراجعه به مناقصه گزار و تحویل تضامین مربوطه، نسبت به عقد قرارداد اقدام نماید. در صورت عدم مراجعه در زمان مقرر ، مناقصه نسبت به نامبرده منفسخ و به ترتیب به نفرات دوم و سوم مراجعه خواهد شد.

۴-۱۷-سپرده نفرات اول تا سوم تا تعیین برنده نهایی مناقصه و عقد قرارداد حداکثر تا سه ماه پس از بازگشایی پاکات مناقصه نزد مناقصه گزار باقی خواهد ماند. مابقی مناقصه گران از نفر چهارم به بعد و مناقصه گرانی که براساس ارزیابی کیفی رد شده باشند، سپرده شرکت در مناقصه آنها در فاصله زمانی ده روز کاری پس از بازگشایی پاکت قیمت پیشنهادی (پاکت ج) عودت خواهد شد.

۵-۱۷- در صورت انصراف هریک از نفرات اول تا سوم از عقد قرارداد، به ترتیب سپرده شرکت در مناقصه ایشان به نفع مناقصه گزار(شرکت سیمان شرق) ضبط می گردد و حق هرگونه ادعا و اعتراضی را از خود سلب نمودند. همچنین سپرده شرکت در مناقصه آن تعداد از مناقصه گران که در حین برگزاری مناقصه از ادامه مناقصه، اعلام انصراف نمایند به نفع مناقصه گزار(شرکت سیمان شرق) ضبط می گردد. و مناقصه گر در این خصوص حق هر گونه ادعایی را از خود سلب می نماید.

توضیح ۸: سپرده تضمین شرکت در مناقصه ، پس از ارائه تضمین انجام تعهدات و انعقاد قرارداد به برنده مناقصه مسترد خواهد شد.

توضیح ۹: نفردوم درصورتی بعنوان برنده مناقصه بعد از نفراول اعلام خواهدشد که تفاوت مبلغ اعلام شده توسط نفر اول با مبلغ اعلام شده توسط نفر دوم ، کمتر از مبلغ ضمانت نامه و یا وجه الضمان شرکت در مناقصه باشد . نفرسوم نیز درصورتی بعنوان برنده مناقصه بعد از نفراول و نفر دوم اعلام خواهد شد که مجموع تفاوت مبلغ اعلام شده نفر اول و دوم با مبلغ اعلام شده توسط نفر سوم کمتر از مجموع مبالغ ضمانت نامه و یا وجه الضمان شرکت در مناقصه نفر اول و دوم باشد .

۱۹. موارد تجدید مناقصه عبارتنداز:

۱-۱۹) امتناع برندگان اول تا سوم مناقصه از انعقاد قرارداد .

۲-۱۹) پایان مدت اعتبار پیشنهادات / عدم وصول پیشنهاد .

۳-۱۹) با نظر کمیسیون معاملات، درصورت بروز دلایلی که امکان تصمیم گیری درخصوص مناقصه میسر نباشد .

۴-۱۹) درصورتیکه هیچ گونه پیشنهادی دریافت نشده و یا در مرحله اول انتشار آگهی ، کمتر از سه پیشنهاد دریافت شده باشد.

۲۰ .موارد لغو مناقصه عبارتند از :

۱-۲۰) نیاز به تامین اقلام موضوع این مناقصه مرتفع شده باشد که تشخیص این امر با کمیسیون معاملات شرکت سیمان شرق می باشد و در این مورد سپرده تضمین شرکت در مناقصه به مناقصه گران عودت می گردد .

۲-۲۰) تغییرات زیادی در اسناد مناقصه لازم باشد و موجب تغییر درماهیت مناقصه گردد و در این مورد سپرده تضمین شرکت در مناقصه به مناقصه گران عودت می گردد.

۳-۲۰) پیشامدهای غیر متعارف نظیر جنگ ، زلزله ، سیل و مانند آنها و در این مورد سپرده تضمین شرکت در مناقصه به مناقصه گران عودت می گردد.

۴-۲۰) بالا بودن قیمتها به نحوی که توجیه اقتصادی طرح منتفی گردد و در این مورد سپرده تضمین شرکت در مناقصه به مناقصه گران عودت می گردد.

۵-۲۰) تشخیص کمیسیون معاملات شرکت سیمان شرق مبنی بر تبانی بین مناقصه گران و سایر موارد که در این مورد سپرده تضمین شرکت در مناقصه ، ضبط می گردد.

۶-۲۰) سایر شرایط ضروری به تشخیص کمیسیون معاملات شرکت سیمان شرق و در این مورد سپرده تضمین شرکت در مناقصه به مناقصه گران عودت

می گردد.

۷-۲۰) عدم انجام تعهدات از سوی برندگان مناقصه که در این مورد سپرده تضمین شرکت در مناقصه برندگان ، ضبط می گردد.

توضیح ۱۰) مناقصه گزار باید به نحوی مقتضی ، تجدید و یا لغو مناقصه را به آگاهی همه مناقصه گران برساند .

توضیح ۱۱) بنابه هردلیلی که مناقصه گزار به تشخیص کمیسیون معاملات ، مناقصه برگزار شده را ولو بعد از تعیین برنده مناقصه وقبل از انعقاد قرارداد با برنده مناقصه، قابل فسخ،انفساخ یا ابطال بداند ، مراتب را به مناقصه گران اطلاع داده و نامبردگان،حق هرگونه اعتراضی را از خود سلب و ساقط می نمایند.

اسناد مناقصه شماره ۳۴۸۰۰۱ مورخه۱۴۰۵/۰۶/۱۰درخصوص شناسایی تامین کننده و فروشنده معتبر و واجد شرایط جهت خرید ۳۱ ردیف اقلام مربوط به گیربکس سیاره ای تیپ فلندر(FLENDER TYPE: P2DA SIZE: 23)مطابق خواسته های شرکت سیمان شرق و بشرح اسناد مناقصه و نقشه و مشخصات فنی پیوست.	

(تعهدنامه)

الف- بدینوسیله تأیید مینماید که مهر و امضاء مجاز پیشنهاد دهنده در پائین این صفحه مبنی بر اطلاع کامل پیشنهاددهنده از متن قوانین، مصوبات، آئین نامه ها، دستورالعملها، بخشنامه ها و به طورکلی اسناد و مدارک نامبرده شده در بند ج ذیل می باشد.

ب- همچنین بدینوسیله تأیید مینماید که اسناد و مدارک موضوع بند ج ذیل نیز جزو اسناد و مدارک این مناقصه است و متن و مفاد و ترتیبات مقرر شده در آنها در ارتباط با این مناقصه و قرارداد ، مورد قبول این پیشنهاد دهنده بوده و تمامی مسئولیتهای لازم و نیز اجرای کامل آنها نیز توسط این پیشنهاددهنده تعهد میشود.

ج – حداقل قوانین و مقررات و بخشنامه هایی که مناقصه گر متعهد به رعایت آن میباشد.

۱) تعهدنامه اجرا و پذیرش مسئولیتهای ناشی از مقررات عمومی کشور و اسناد و مدارک عمومی این مناقصه و پیش نویس قرارداد مربوطه و شرایط، اسناد و مدارک، مقررات و ضوابط عمومی و جاری حاکم بر قراردادها را پذیرفته و خود را ملزم به رعایت آنها می داند .

۲) قانون کار، قانون تأمین اجتماعی و قانون مالیاتهای مستقیم و سایر مقررات مربوط به عوارض و کسورات قانونی قرارداد .

اسناد مناقصه شماره ۳۴۸۰۰۱ مورخه۱۴۰۵/۰۶/۱۰درخصوص شناسایی تامین کننده و فروشنده معتبر و واجد شرایط جهت خرید ۳۱ ردیف اقلام مربوط به گیربکس سیاره ای تیپ فلندر(FLENDER TYPE: P2DA SIZE: 23)مطابق خواسته های شرکت سیمان شرق و بشرح اسناد مناقصه و نقشه و مشخصات فنی پیوست.

پیشنهاد قیمت

به موجب مناقصه عمومی شماره ۳۴۸۰۰۱ مورخه ۱۴۰۵/۰۶/۱۰اینجانب امضاء کننده زیر پس از بررسی و آگاهی کامل و پذیرش تعهد اجرا و قبول مسئولیت در مورد مطالب و مندرجات کلیه اسناد مناقصه (شرایط عمومی و اختصاصی مناقصه ، پیش نویس قرارداد و اسناد ارزیابی) و قبول کلیه مقررات اسناد و مدارک مناقصه با مطالعه و امضـــاء و قبول تمام شرایط ، قیمت پیشنهادی برای جهت خرید ۳۱ردیف اقلام مربوط به گیربکس سیاره ای تیپ فلندر(FLENDER TYPE: P۲DA SIZE: ۲۳) مطابق دستور العمل و خواسته های شرکت سیمان شرق و بشرح اسناد مناقصه ونقشه ها و مشخصات فنی پیوست را مجموعا ..... ریال (به حروف).....در مدت زمان اجرای ..... روز اعلام می دارم.

تذکر۱) مبالغ پیشنهادی بصورت ناخالص با توجه به جمیع شرایط درج شده در اسناد مناقصه و پیش نویس قرارداد و کلیه کسورات و بدون احتساب مالیات بر ارزش افزوده می باشد وتا پایان موضوع قرارداد هیچگونه تعدیلی به مبالغ پیشنهادی تعلق نمی گیرد .

تذکر ۲) ملاک محاسبه برای اجرای موضوع مناقصه ، مقادیر اعلام شده طبق نیاز شرکت سیمان شرق می باشد .

تذکر ۳) پیشنهاد قیمت موضوع مناقصه به عدد و به حروف در جدول فوق ، بصورت کامل ذکر شده باشد .

ردیف	Flender code	Drawing Number	Material -Nr	Description	QTY		DESCRIPTION	Shargh Cement code	قیمت واحد(ریال)	قیمت کل(ریال)
۱	۲۲۸	۸۸۹۸۱۱۶	۰۰۰.۰۰۰.۶۲۶.۱۵۷	RING - ANLAUF۰۶۵*۱۶۰*۱۰ PTFE/۲۵C ۵۸۶۷۰۳۵/A TIE PIECE ۰۶۵*۱۶۰*۱۰ PTFE/۲۵C	۲	PCS	قطعه پاپیونی C۲۵PTFE ۱۰x۱۶۰x۶۵ جهت گیربکس سیاره ای درایو کوره واحد ٤ ش نقشه ۸۸۹۸۱۱۶ - ۲۲۸ P.N	۱۱٤۳۰٤۰۵٦۹		
۲	۳۰٦	۸۸۹۸۱۱۶	۰۰۰.۰۰۰.۸۰۷.۲۵٤	STIRNARD,INVERZ PN۲۳ ۳٤CrNiMo٦ ۵۸٦۷۰۳۳/H INTERN.TOOTHED GEAR WHEEL PN۲۳	۲	PCS	چرخ دنده داخلی ۲۳PN جهت گیربکس سیاره ای درایو کوره واحد ٤ ش نقشه ۸۸۹۸۱۱۶ - ۳۰٦ P.N	۱۱٤۳۰٤۰۵۷۰		
۳	۳۲۸	۸۸۹۸۱۱۶	۰۰۰.۰۰۰.٦۲٦.۱٦٤	RING-ANLAUF ۲۵۵X۳۱۵X۱۰ PTFE/۲۵C ۵۸٦۷۰٤۸/B TIE PIECE ۲۵۵X۳۱۵X۱۰ PTFE/۲۵C	۲	PCS	قطعه پاپیونی ۱۰x۳۱۵x۲۵۵ C۲۵PTFEجهت گیربکس سیاره ای درایو کوره واحد ٤ ش نقشه ۸۸۹۸۱۱۶ - P.N ۳۲۸	۱۱٤۳۰٤۰۵۷۱		
٤	۳٤۱	۸۸۹۸۱۱۶	۰۰۰.۰۰۱.۲٦۰.۲٦۳	STIRD-PLA GP ۲۳۱,۵/۲,۲۰ ۱.٦۵۸۷ ۵۸٦۷۰۲٤/A PLANET PINION GP ۲۳۱,۵/۲,۲۰ ۱.٦۵۸	٤	PCS	پینیون سیاره ای ۱.٦۵۸ ۲.۲۰/۲۳۱.۵GP جهت گیربکس سیاره ای درایو کوره واحد ٤ ش نقشه ۸۸۹۸۱۱۶ - ۳٤۱ P.N	۱۱٤۳۰٤۰۵۷۲		
۵	۵۰۰	۸۸۹۸۱۱۶	۰۰۰.۰۰۱.۲٦۰.۲٦۵	STRDW-PLA GP ۲۳۱,۵/۲,۲۰ ۱.٦۵۸۷ ۵۸٦۷۹٦۳/B PLANETARY CYLINDRICAL WHEEL SHAFT GP ۲۳۱	۲	PCS	شافت میانی ۲۳۱GP جهت گیربکس سیاره ای درایو کوره واحد ٤ ش نقشه ۸۸۹۸۱۱۶ - ۵۰۰ P.N	۱۱٤۳۰٤۰۵۷۳		
٦	۵۰۲	۸۸۹۸۱۱۶	۰۰۰.۰۰۱.۲۵٤.٦۳٤	STIRNRAD LP ۲٦۵,۰/۲,۲۷ ۱.٦۵۸۷ ۵۸٦۷۹۵۵/A GEAR WHEEL LP ۲٦۵,۰/۲,۲۷ ۱.٦۵۸۷	۲	PCS	دنده شافت میانی ۱.٦۵۸۷ ۲٦۵.۰.۲.۲۷LP جهت گیربکس سیاره ای درایو کوره واحد ٤ ش نقشه ۸۸۹۸۱۱۶ - ۵۰۲	۱۱٤۳۰٤۰۵۷٤		

اسناد مناقصه شماره ۳۴۸۰۰۱ مورخه۱۴۰۵/۰۶/۱۰درخصوص شناسایی تامین کننده و فروشنده معتبر و واجد شرایط جهت خرید ۳۱ ردیف اقلام مربوط به گیربکس سیاره ای تیپ فلندر(FLENDER TYPE: P2DA SIZE: 23)مطابق خواسته های شرکت سیمان شرق و بشرح اسناد مناقصه و نقشه و مشخصات فنی پیوست.

							P.N		
۷	۱۰۰	۸۸۹۸۱۱۶	۰۰۰.۰۰۱.۲۵٤.۵۸۳	STRDWELLE RP ۲٦۵,۰/۲,۲۷ ۱.٦۵۸۷ ۵۸٦۷۹۵٤ PINION SHAFT RP ۲٦۵,۰/۲,۲۷ ۱.٦۵۸۷	٤	PCS	شافت پینیون RP ۱.٦۵۸۷ ۲٦۵.۰.۲.۲۷ جهت گیربکس سیاره ای درایو کوره واحد ٤ ش نقشه ۸۸۹۸۱۱٦ - ۱۰۰ P.N	۱۱٤۳۰٤۰۵۷۵	
۸		٦۰۷۹۵۵٤		HYDRO COUPLING FAK۳٤۲	۱	PC	هیدرو کوپلینگ ۳٤۲FAK جهت گیربکس کمکی درایو کوره واحد ٤ ش نقشه ٦۰۷۹۵۵٤	۱۱٤۳۰٤۰۵۷٦	
۹	۱۳۵	۸۸۹۸۱۱٦	۰۰۰.۰۰۰.۷۸۱.۸۵۰	WDR ۱۳۰X۱٦۰X۱۵ BAUM W ۵۷۱۰ ۷۵FPM۵۸۵ SHAFT SEAL ۱۳۰X۱٦۰X۱۵ BAUM W ۵۷۱۰	۲	PCS	سیل شافت پینیون BAUM ۱۵x۱٦۰x۱۳۰ ۵۷۱۰W جهت گیربکس سیاره ای درایو کوره واحد ٤ ش نقشه ۸۸۹۸۱۱٦ - ۱۳۵ P.N	۱۱٤۳۰٤۰۵۷۷	
۱۰	۱٤٦	۸۸۹۸۱۱٦	۰۰۰.۰۰۰.٦۲٦.۱۷۸	RING ۱۲۰,۰X۱۳۰,۰X۰٤۱,۵W ۳٤CrNiMo٦ ۵۸٦۷۰۵٤/E RING ۱۲۰,۰X۱۳۰,۰X۰٤۱,۵W ۳٤CrNiMo٦	۲	PCS	رینگ زیر سیل شافت پینیون W٤۱.۵x۱۳۰x۱۲۰ ۰٦CRNIM۳٤ جهت گیربکس سیاره ای درایو کوره واحد ٤ ش نقشه ۸۸۹۸۱۱٦ - ۱٤٦ P.N	۱۱٤۳۰٤۰۵۷۸	
۱۱	۱٦۳	۸۸۹۸۱۱٦	۰۰۰.۰۰۰.۳٤۷.۲۱۲	RING,AS ۱٦۰/۰٦,۰X۱,۵ W ۵۷۳۰ FED-ST LAMELLAR RING, AS (FEY) ۱٦۰/۰٦,۰X۱,۵ W۵	٦	PCS	رینگ لاملار شافت پینیون ۱.۵x۰٦.۰/۱٦۰AS FEY ۵W جهت گیربکس سیاره ای درایو کوره واحد ٤ ش نقشه ۸۸۹۸۱۱٦ - ۱٦۳ P.N	۱۱٤۳۰٤۰۵۷۹	
۱۲	۲۰٦	۸۸۹۸۱۱٦	۰۰۰.۰۰۱.۲۸۸.۵٤٦	STIRNRAD,INVERZ P۲ ۲۳ ۳٤CrNiMo٦ ۵۸٦۷۷۱۵/E INTERN.TOOTHED GEAR WHEEL P۲ ۲۳	۲	PCS	چرخ دنده داخلی ۲P ۲۳ جهت گیربکس سیاره ای درایو کوره واحد ٤ ش نقشه ۸۸۹۸۱۱٦ - ۲۰٦ P.N	۱۱٤۳۰٤۰۵۸۰	
۱۳	۲۱۳	۸۸۹۸۱۱٦	۰۰۰.۰۰۰.۳٤۷.۰۰۵	RING,AS ۵۰۰/۱۲,۰X۲,۵ W ۵۷۳۰ FED-ST LAMELLAR RING, AS (FEY) ۵۰۰/۱۲,۰X۲,۵ W ۵	٦	PCS	رینگ لاملار خروجی شافت پینیون AS FEY ۲.۵x۱۲.۰/۵۰۰ ۵W جهت گیربکس سیاره ای درایو کوره واحد ٤ ش نقشه ۸۸۹۸۱۱٦ - ۲۱۳ P.N	۱۱٤۳۰٤۰۵۸۱	
۱٤	۲۲۰	۸۸۹۸۱۱٦	۰۰۰.۰۰۰.۷۷۰.٤۰۳	WDR ٤٦۰X۵۰۰X۲۰ C D ۳۷٦۰ ۷۲NBR۹۰۲ SHAFT SEAL ٤٦۰X۵۰۰X۲۰ C D ۳۷٦۰ ۷۲NBR۹۰۲	۲	PCS	سیل شافت خروجی C D ۲۰x۵۰۰x٤٦۰ ۹۰۲NBR۳۷٦۰۷۲ جهت گیربکس سیاره ای درایو کوره واحد ٤ ش نقشه ۸۸۹۸۱۱٦ - ۲۲۰ P.N	۱۱٤۳۰٤۰۵۸۲	

اسناد مناقصه شماره ۳۴۸۰۰۱ مورخه۱۴۰۵/۰۶/۱۰درخصوص شناسایی تامین کننده و فروشنده معتبر و واجد شرایط جهت خرید ۳۱ ردیف اقلام مربوط به گیربکس سیاره ای تیپ فلندر(FLENDER TYPE: P2DA SIZE: 23)مطابق خواسته های شرکت سیمان شرق و بشرح اسناد مناقصه و نقشه و مشخصات فنی پیوست.

۱۵	۲۲۷	۸۸۹۸۱ ۱۶	۰۰۰.۰۰۱. ۲۵٤.۵۸۵	STIRD-PLA GP ۲۷۲,٤/۱,۷٦ ۱.٦۵۸۷ ۵۸٦۷۰۰٤/K PLANET PINION GP ۲۷۲,٤/۱,۷٦ ۱.٦۵۸۷	۲	PCS	پینیون سیاره ای ۱.٦۵۸۷ ۱.۷٦/۲۷۲.٤GP جهت گیربکس سیاره ای درایو کوره واحد ٤ ش نقشه ۸۸۹۸۱۱٦ - ۲۲۷ P.N	۱۱٤۳۰٤۰۵۸ ۳		
۱٦	۳۰۰	٦۰۰۸٦ ۱٦	۰۰۰.۰۰۰. ٦۷۵.۷۷۵	STRDELLE R ۱۸۵.۰/۳.۹٤ ۱.٦۵۸۷ ۵۸۷۵۷۷۵/A PINION SHAFT R ۱۸۵.۰/۳.۹٤ ۱.٦۵۸۷	۱	PC	شافت پینیون راست گرد ۱.٦۵۸۷ ۳.۹٤/۰. ۱۸۵R جهت گیربکس سیاره ای درایو کمکی کوره واحد ٤ ش نقشه ٦۰۰۸٦۱٦ - ۳۰۰ P.N	۱۱٤۳۰٤۰۵۹ ۱		
۱۷	۳۰۲	٦۰۰۸٦ ۱٦	۰۰۰.۰۰۰. ٦۷۵.۷۵۲	STIRNARD L ۲۲۰.۰/٤.۸۹ ۱.٦۵۸۷ ۵۸۷۵۷۵۲/B GEAR WHEEL L ۲۲۰.۰/٤.۸۹ ۱.٦۵۸۷	۱	PC	چرخ دنده چپ گرد ۱.٦۵۸۷ ٤.۸۹/۰. ۲۲۰L جهت گیربکس سیاره ای درایو کمکی کوره واحد ٤ ش نقشه ٦۰۰۸٦۱٦ - ۳۰۲ P.N	۱۱٤۳۰٤۰۵۹ ۲		
۱۸	٤۰۰	٦۰۰۸٦ ۱٦	۰۰۰.۰۰۰. ٦٦٦.۵۱۲	STRDELLE L ۱۵۷.۰/۲.۳۱ ۱.٦۵۸۷ ۵۸۸٦۵۱۲ PINION SHAFT L ۱۵۷.۰/۲.۳۱ ۱.٦۵۸۷	۱	PC	شافت پینیون چپ گرد ۱.٦۵۸۷ ۲.۳۱/۰. ۱۵۷L جهت گیربکس سیاره ای درایو کمکی کوره واحد ٤ ش نقشه ٦۰۰۸٦۱٦ - ٤۰۰ P.N	۱۱٤۳۰٤۰۵۹ ۳		
۱۹	٤۰۲	٦۰۰۸٦ ۱٦	۰۰۰.۰۰۰. ٦٦٦.۵۱۳	STIRNARD R ۱۵۷.۰/۲.۳۱ ۱.٦۵۸۷ ۵۸۸٦۵۱۳ GEAR WHEEL R ۱۵۷.۰/۲.۳۱ ۱.٦۵۸۷	۱	PC	چرخ دنده راست گرد ۱.٦۵۸۷ ۲.۳۱/۰. ۱۵۷R جهت گیربکس سیاره ای درایو کمکی کوره واحد ٤ ش نقشه ٦۰۰۸٦۱٦ - ٤۰۲ P.N	۱۱٤۳۰٤۰۵۹ ٤		
۲۰	۲۸۱	٦۰۰۸٦ ۱٦	۰۰۰.۰۰۰. ۳۸۹.۰۱٦	RS FXM ۲۰۰-٦۳SX/H۱۰۰ W ۵۸۱۳ ST BACKSTOP FXM ۲۰۰-٦۳SX/H۱۰۰ W ۵۸۱۳ ST	۲	PCS	بک استاپ گیربکس W ۱۰۰x/H٦۳-۲۰۰FXM ST۵۸۱۳ جهت گیربکس سیاره ای درایو کمکی کوره واحد ٤ ش نقشه ٦۰۰۸٦۱٦ - ۲۸۱ P.N	۱۱٤۳۰٤۰۵۹ ۵		
۲۱	۱۰۰	٦۰۰۸٦ ۱٦	۰۰۰.۰۰۱. ۲٦۰.۰۹٤	STRDWELLE DV۹.۰۳X۵۷۷ ۱.٦۵۸۷ ٦۰٤٦۳۵٤/A PINION SHAFT DV۹.۰۳X۵۷۷ ۱.٦۵۸۷	۲	PCS	شافت پینیون V۹D ۱.٦۵۸۷ ۵۷۷x۰.۳ جهت گیربکس درایو کمکی کوره واحد ٤ ش نقشه ٦۰۰۸٦۱٦ - ۱۰۰ P.N	۱۱٤۳۰٤۰۵۹ ٦		
۲۲	۱۰۲	٦۰۰۸٦ ۱٦	۰۰۰.۰۰۰. ۵٦۰.۸٤۲	STIRNARD R ۱۳۰.۰/۲.۵٤ ۱.٦۵۸۷ ۵۸۸۰۸٤۲/B GEAR WHEEL R ۱۳۰.۰/۲.۵٤ ۱.٦۵۸۷	۲	PCS	چرخ دنده راست گرد ۱.٦۵۸۷ ۲.۵٤/۰. ۱۳۰R جهت گیربکس درایو کمکی کوره واحد ٤ ش نقشه ٦۰۰۸٦۱٦ - ۱۰۲ P.N	۱۱٤۳۰٤۰۵۹ ۷		
۲۳	۱۲۳	٦۰۰۸٦ ۱٦	۰۰۰.۰۰۰. ۲٤۳.۳۲۳	O-RING OR۰۰۷٤ -۰۳ W۵۷۱۳ ۷۲NBR۸۷۲	٤	PCS	اورینگ W ۰۳-۰۰۷٤OR ۵۷۱۳ ۸۷۲NBR۷۲ جهت گیربکس درایو کمکی کوره واحد ٤ ش نقشه ٦۰۰۸٦۱٦ - ۱۲۳ P.N	۱۱٤۳۰٤۰۵۹ ۸		

اسناد مناقصه شماره ۳۴۸۰۰۱ مورخه۱۴۰۵/۰۶/۱۰درخصوص شناسایی تامین کننده و فروشنده معتبر و واجد شرایط جهت خرید ۳۱ ردیف اقلام مربوط به گیربکس سیاره ای تیپ فلندر(FLENDER TYPE: P2DA SIZE: 23)مطابق خواسته های شرکت سیمان شرق و بشرح اسناد مناقصه و نقشه و مشخصات فنی پیوست.

۲۴	۱۳۳	۶۰۰۸۶ ۱۶	۰۰۰.۰۰۰. ۳۰۶.۰۵۲	WDR ۰۵۵*۰۷۰*۰۸ BAUMSL W ۵۷۱۰ V۵FPM۵۸۵ SHAFT SEAL ۰۵۵*۰۷۰*۰۸ BAUMSL W ۵۷۱۰	۶	PCS	سیلینگ شافت BAUMSL ۰۸x۰۷۰x۰۵۵ ۵۷۱۰W جهت گیربکس درایو کمکی کوره واحد ٤ ش نقشه ۶۰۰۸۶۱۶ - ۱۳۳- P.N ۲۳۳P.N ۱۳۲ - P.N	۱۱٤۳۰٤۰۵۹ ۹		
۲۵	۱۳٤	۶۰۰۸۶ ۱۶	۰۰۲.۹۰۰. ۰۷۶.۶۰۶	WDR ۵۵*۷۰*۱۰ BAUM W ۵۷۱۰ V۵FKM۵۸۵ SHAFT SEAL ۵۵*۷۰*۱۰ BAUM W ۵۷۱۰ V۵FKM۵۸۵	٤	PCS	رینگ لاملار ۱۰x۰۷۰x۰۵۵ V۵ ۵۷۱۰BAUMSL W ۵۸۵FKM جهت گیربکس درایو کمکی کوره واحد ٤ ش نقشه ۶۰۰۸۶۱۶ - P.N ۱۳٤	۱۱٤۳۰٤۰۶۰ ۰		
۲۶	۱۳۵	۶۰۰۸۶ ۱۶	۰۰۰.۰۰۰. ۳٤۷.۱۹۹	RING.AS ۰۷۰/۰۳.۱X۰.۸۲ W۵۷۳۰ FED-ST LAMELLAR RING .AS FEY ۰۷۰/۰۳.۱X۰.۸۲ W	۶	PCS	رینگ لاملار AS FEY W ۰.۸۲x۱. ۰۳/۰۷۰ جهت گیربکس درایو کمکی کوره واحد ٤ ش نقشه ۶۰۰۸۶۱۶ - ۱۳۵ P.N	۱۱٤۳۰٤۰۶۰ ۱		
۲۷	۱۳۶	۶۰۰۸۶ ۱۶	۰۰۰.۰۵۰. ۰۲۷.۶۵۲	WDR ٤۲*۶۲*۸ BAUM V۵FPM۵۸۵ SHAFT SEAL ٤۲*۶۲*۸ BAUM V۵FPM۵۸۵	٤	PCS	سیلینگ شافت ۸x۶۲x٤۲ ۵۸۵FPM V۵BAUM جهت گیربکس درایو کمکی کوره واحد ٤ ش نقشه ۶۰۰۸۶۱۶ - ۱۳۶ P.N	۱۱٤۳۰٤۰۶۰ ۲		
۲۸	۲۰۰	۶۰۰۸۶ ۱۶	۰۰۰.۰۰۱. ۲۵۵.۲٤۷	WELLE D۱۰۹X۸۰۳ ۳٤CRNIMO ۶ K۳/K٤ ۰۶ SHAFT D۱۰۹X۸۰۳ ۳٤CRNIMO ۶ K۳/K٤ ۰۶	۲	PCS	شافت ۸۰۳x۱۰۹D ۰۶ ٤/K۳K ۰۶CRNIM۳٤ جهت گیربکس درایو کمکی کوره واحد ٤ ش نقشه ۶۰۰۸۶۱۶ - ۲۰۰ P.N	۱۱٤۳۰٤۰۶۰ ۳		
۲۹	۵	۵۲۷۳۷ ۷٤	۰۰۰.۰۰۰. ۶۵۰.۵۹۱	REIBBELAG FB ۱۸۰ ۵۰۲۲ SH FRICTION LINING FB ۱۸۰ ۵۰۲۲ SH	۸	PCS	لاینر اصطکاکی ترمز FB ۱۸۰ ۵۰۲۲ SH جهت درایو کمکی کوره واحد ٤ ش نقشه ۵۲۷۳۷۷٤	۱۱٤۳۰٤۰۶۰ ٤		
۳۰	۱۰	۵۲۷۳۷ ۷٤	۰۰۰.۰۰۱. ۲۵۹.۰۰۸	FED-Z ۳,۶X۱٤,٤x۸,۵ ۱.٤۳۱۰ ۶۰٤۵۵۰۶/- TENSION SPRING ۳,۶X۱٤,٤x۸,۵ ۱.٤۳۱۰	۸	PCS	فنر فشاری ترمز ۱.٤۳۱۰ ۸.۵X۱٤.٤x۳.۶ جهت درایو کمکی کوره واحد ٤ ش نقشه ۵۲۷۳۷۷٤	۱۱٤۳۰٤۰۶۰ ۵		
۳۱	۸۰۱	۸۸۹۸۱ ۱۶	۰۰۰.۰۰۱. ۲۵٤.۸۲۷	STRDWELLE RP ۲۶۵,۰/۲,۲۷ ۱.۶۵۸۷ ۶۰٤۱۹۸۵/A PINION SHAFT RP ۲۶۵,۰/۲,۲۷ ۱.۶۵۸۷	۲	PCS	دنده شافت میانی ۱.۶۵۸۷ ۲۶۵.۰.۲.۲۷RP جهت گیربکس سیاره ای درایو کوره واحد ٤ ش نقشه ۸۸۹۸۱۱۶ - ۸۰۱ P.N	۱۱٤۳۰٤۰۶۳ ۵		
			قیمت کل(ریال)							

اسناد مناقصه شماره ۳۴۸۰۰۱ مورخه۱۴۰۵/۰۶/۱۰درخصوص شناسایی تامین کننده و فروشنده معتبر و واجد شرایط جهت خرید ۳۱ ردیف اقلام مربوط به گیربکس سیاره ای تیپ فلندر(FLENDER TYPE: P2DA SIZE: 23)مطابق خواسته های شرکت سیمان شرق و بشرح اسناد مناقصه و نقشه و مشخصات فنی پیوست.	

« پیش نویس قرارداد خرید کالا »

این پیش نویس قرارداد بین شرکت سیمان شرق (سهامی عام) به شماره ثبت ۴۵۹۲۸ به شناسه ملی ۱۰۱۰۰۲۳۳۷۲۵ و کد اقتصادی ۵۳۳۷-۴۵۱۵-۴۱۱۱ به نمایندگی آقای .....(مدیر عامل و عضو هیات مدیره) و آقای ..... (عضو هیات مدیره) طبق آخرین آگهی روزنامه رسمی جمهوری اسلامی ایران به شماره روزنامه مورخه به نشانی: مشهد،خیابان دانشگاه۱۵،خیابان اسرار۱/۲،پلاک۴۷-کد پستی ۹۱۳۸۸۴۵۱۶۴-تلفن۳۸۴۲۴۲۱۲-۰۵۱ که از این پس به اختصار در متن قرارداد خریدار نامیده می‌شود از یک طرف و شرکت..... به شماره ثبت ..... و شناسه ملی .....و کد اقتصادی .....به نمایندگی .....طبق آخرین آگهی روزنامه رسمی به شماره .....مورخه .....به نشانی .....کد پستی ..... تلفن ثابت .....همراه .....که از این پس در متن قرارداد به اختصار فروشنده نامیده می شود از طرف دیگر منعقد گردید و از تاریخ انعقاد لازم الاجراست:

ماده ۱) موضوع قرارداد:

عبارت است از خرید قطعات متعلق به گیربکس سیاره ای با مشخصات و قیمتهای به شرح جدول شماره یک قرارداد.

تبصره ۱) تشخیص تخلف مندرج در تبصره یک به عهده خریدار بوده که پس از تائید آن توسط ناظر، خریدار می تواند ضمن ضبط تضمین قرارداد، کلیه خسارت وارده را از فروشنده مطالبه و در صورت صلاحدید، راساً قرارداد را فسخ نماید.

ماده ۲)مدت قرارداد :

شروع قرارداد ازتاریخ لغایت به مدت ۳ ماه تمام شمسی می باشد .

تبصره ۲) مدت و مقدار قرارداد برحسب ضرورت خریدار تا ۲۵٪ قابل کاهش و یا افزایش خواهد بود بدیهی است مبلغ پایه قرارداد ثابت می باشد و هیچگونه تعدیلی به قیمت آن تعلق نمی گیرد.

ماده۳)مبلغ قرارداد:

۱-۳)کل مبلغ اقلام موضوع قرارداد با هر گونه حقوق و عوارض و سایر هزینه ها و بدون احتساب مالیات بر ارزش افزوده و به شرح جدول ذیل ..... ریال (به حروف .....) می باشد .

اسناد مناقصه شماره ۳۴۸۰۰۱ مورخه۱۴۰۵/۰۶/۱۰درخصوص شناسایی تامین کننده و فروشنده معتبر و واجد شرایط جهت خرید ۳۱ ردیف اقلام مربوط به گیربکس سیاره ای تیپ فلندر(FLENDER TYPE: P2DA SIZE: 23)مطابق خواسته های شرکت سیمان شرق و بشرح اسناد مناقصه و نقشه و مشخصات فنی پیوست.

ردیف	Flender code	Drawing Number	Material - Nr	Description	QTY		DESCRIPTION	Shargh Cement code	قیمت واحد(ریال)	قیمت کل(ریال)
۱	۲۲۸	۸۸۹۸۱۱۶	۰۰۰.۰۰۰.۶۲۶.۱۵۷	RING -ANLAUF۰۶۵*۱۶۰*۱۰ PTFE/۲۵C ۵۸۶۷۰۳۵/A TIE PIECE ۰۶۵*۱۶۰*۱۰ PTFE/۲۵C	۲	PCS	قطعه پاپیونی C۲۵PTFE ۱۰x۱۶۰x۶۵ جهت گیربکس سیاره ای درایو کوره واحد ٤ ش نقشه ۸۸۹۸۱۱۶ - ۲۲۸ P.N	۱۱٤۳۰٤۰ ٥٦۹		
۲	۳۰۶	۸۸۹۸۱۱۶	۰۰۰.۰۰۰.۸۰۷.۲۵٤	STIRNARD,INVERZ PN۲۳ ۳٤CrNiMo٦ ۵۸٦۷۰۳۳/H INTERN.TOOTHED GEAR WHEEL PN۲۳	۲	PCS	چرخ دنده داخلی PN۲۳ جهت گیربکس سیاره ای درایو کوره واحد ٤ ش نقشه ۸۸۹۸۱۱۶ - ۳۰۶ P.N	۱۱٤۳۰٤۰ ٥۷۰		
۳	۳۲۸	۸۸۹۸۱۱۶	۰۰۰.۰۰۰.۶۲۶.۱۶٤	RING-ANLAUF ۲۵۵X۳۱۵X۱۰ PTFE/۲۵C ۵۸٦۷۰٤۸/B TIE PIECE ۲۵۵X۳۱۵X۱۰ PTFE/۲۵C	۲	PCS	قطعه پاپیونی ۱۰x۳۱۵x۲۵۵ C۲۵PTFEجهت گیربکس سیاره ای درایو کوره واحد ٤ ش نقشه ۸۸۹۸۱۱۶ - ۳۲۸ P.N	۱۱٤۳۰٤۰ ٥۷۱		
٤	۳٤۱	۸۸۹۸۱۱۶	۰۰۰.۰۰۱.۲٦۰.۲٦۳	STIRD-PLA GP ۲۳۱,٥/۲,۲۰ ۱.٦٥۸۷ ٥۸٦۷۰۲٤/A PLANET PINION GP ۲۳۱,٥/۲,۲۰ ۱.٦٥۸	٤	PCS	پینیون سیاره ای ۱.٦٥۸ ۲.۲۰/۲۳۱.٥GP جهت گیربکس سیاره ای درایو کوره واحد ٤ ش نقشه ۸۸۹۸۱۱۶ - ۳٤۱ P.N	۱۱٤۳۰٤۰ ٥۷۲		
٥	۵۰۰	۸۸۹۸۱۱۶	۰۰۰.۰۰۱.۲٦۰.۲٦٥	STRDW-PLA GP ۲۳۱,٥/۲,۲۰ ۱.٦٥۸۷ ٥۸٦۷۹٦۳/B PLANETARY CYLINDRICAL WHEEL SHAFT GP ۲۳۱	۲	PCS	شافت میانی ۲۳۱GP جهت گیربکس سیاره ای درایو کوره واحد ٤ ش نقشه ۸۸۹۸۱۱۶ - ۵۰۰ P.N	۱۱٤۳۰٤۰ ٥۷۳		
٦	۵۰۲	۸۸۹۸۱۱۶	۰۰۰.۰۰۱.۲٥٤.٦۳٤	STIRNRAD LP ۲٦٥,۰/۲,۲۷ ۱.٦٥۸۷ ٥۸٦۷۹٥٥/A GEAR WHEEL LP ۲٦٥,۰/۲,۲۷ ۱.٦٥۸۷	۲	PCS	دنده شافت میانی ۱.٦٥۸۷ ۲٦٥.۰.۲.۲۷LP جهت گیربکس سیاره ای درایو کوره واحد ٤ ش نقشه ۸۸۹۸۱۱۶ - ۵۰۲ P.N	۱۱٤۳۰٤۰ ٥۷٤		
۷	۱۰۰	۸۸۹۸۱۱۶	۰۰۰.۰۰۱.۲٥٤.٥۸۳	STRDWELLE RP ۲٦٥,۰/۲,۲۷ ۱.٦٥۸۷ ٥۸٦۷۹٥٤ PINION SHAFT RP ۲٦٥,۰/۲,۲۷ ۱.٦٥۸۷	٤	PCS	شافت پینیون RP ۱.٦٥۸۷ ۲٦٥.۰.۲.۲۷ جهت گیربکس سیاره ای درایو کوره واحد ٤ ش نقشه ۸۸۹۸۱۱۶ - ۱۰۰ P.N	۱۱٤۳۰٤۰ ٥۷٥		
۸		٦۰۰۸٦۱٦		HYDRO COUPLING FAK۳٤۲	۱	PC	هیدرو کوپلینگ ۳٤۲FAK جهت گیربکس کمکی درایو کوره واحد ٤ ش نقشه ٦۰۰۸٦۱٦	۱۱٤۳۰٤۰ ٥۷٦		
۹	۱۳٥	۸۸۹۸۱۱۶	۰۰۰.۰۰۰.۷۸۱.۸٥۰	WDR ۱۳۰X۱٦۰X۱٥ BAUM W ٥۷۱۰ V٥FPM٥۸٥ SHAFT SEAL ۱۳۰X۱٦۰X۱٥ BAUM W ٥۷۱۰	۲	PCS	سیل شافت پینیون BAUM ۱٥x۱٦۰x۱۳۰ ٥۷۱۰W جهت گیربکس سیاره ای درایو کوره واحد ٤ ش نقشه ۸۸۹۸۱۱۶ - ۱۳٥ P.N	۱۱٤۳۰٤۰ ٥۷۷		

اسناد مناقصه شماره ۳۴۸۰۰۱ مورخه۱۴۰۵/۰۶/۱۰درخصوص شناسایی تامین کننده و فروشنده معتبر و واجد شرایط جهت خرید ۳۱ ردیف اقلام مربوط به گیربکس سیاره ای تیپ فلندر(FLENDER TYPE: P2DA SIZE: 23)مطابق خواسته های شرکت سیمان شرق و بشرح اسناد مناقصه و نقشه و مشخصات فنی پیوست.

۱۰	۱٤٦	۸۸۹۸۱۱٦	۰۰۰.۰۰۰.٦۳٦.۱۷۸	RING ۱۲۰,۰X۱۳۰,۰X۰٤۱,٥W ۳٤CrNiMo٦ ٥۸٦۷۰٥٤/E RING ۱۲۰,۰X۱۳۰,۰X۰٤۱,٥W ۳٤CrNiMo٦	۲	PCS	رینگ زیر سیل شافت پینیون W٤۱.٥x۱۳۰x۱۲۰ ۰٦CRNIM۳٤ جهت گیربکس سیاره ای درایو کوره واحد ٤ ش نقشه P.N ۱٤٦ - ۸۸۹۸۱۱٦	۱۱٤۳۰٤۰ ٥۷۸		
۱۱	۱٦۳	۸۸۹۸۱۱٦	۰۰۰.۰۰۰.۳٤۷.۳۱۲	RING,AS ۱٦۰/۰٦,۰X۱,٥ W ٥۷۳۰ FED-ST LAMELLAR RING, AS (FEY) ۱٦۰/۰٦,۰X۱,٥ W٥	٦	PCS	رینگ لاملار شافت پینیون ۱.٥x۰٦.۰/۱٦۰AS FEY ٥W جهت گیربکس سیاره ای درایو کوره واحد ٤ ش نقشه ۸۸۹۸۱۱٦ - P.N ۱٦۳	۱۱٤۳۰٤۰ ٥۷۹		
۱۲	۲۰٦	۸۸۹۸۱۱٦	۰۰۰.۰۰۱.۲۸۸.٥٤٦	STIRNRAD,INVERZ P۲ ۲۳ ۳٤CrNiMo٦ ٥۸٦۷۷۱٥/E INTERN.TOOTHED GEAR WHEEL P۲ ۲۳	۲	PCS	چرخ دنده داخلی P۲ ۲۳ جهت گیربکس سیاره ای درایو کوره واحد ٤ ش نقشه ۸۸۹۸۱۱٦ - ۲۰٦ P.N	۱۱٤۳۰٤۰ ٥۸۰		
۱۳	۲۱۳	۸۸۹۸۱۱٦	۰۰۰.۰۰۰.۳٤۷.۰۰٥	RING,AS ٥۰۰/۱۲,۰X۲,٥ W ٥۷۳۰ FED-ST LAMELLAR RING, AS (FEY) ٥۰۰/۱۲,۰X۲,٥ W ٥	٦	PCS	رینگ لاملار خروجی شافت پینیون AS FEY ٥W ۲.٥x۱۲.۰/٥۰۰ جهت گیربکس سیاره ای درایو کوره واحد ٤ ش نقشه ۸۸۹۸۱۱٦ - ۲۱۳ P.N	۱۱٤۳۰٤۰ ٥۸۱		
۱٤	۲۲۰	۸۸۹۸۱۱٦	۰۰۰.۰۰۰.۷۷۰.٤۰۳	WDR ٤٦۰X٥۰۰X۲۰ C D ۳۷٦۰ V۲NBR۹۰۲ SHAFT SEAL ٤٦۰X٥۰۰X۲۰ C D ۳۷٦۰ V۲NBR۹۰۲	۲	PCS	سیل شافت خروجی C D ۲۰x٥۰۰x٤٦۰ ۹۰۲NBR۳۷٦۰۷۲ جهت گیربکس سیاره ای درایو کوره واحد ٤ ش نقشه ۸۸۹۸۱۱٦ - P.N ۲۲۰	۱۱٤۳۰٤۰ ٥۸۲		
۱٥	۲۲۷	۸۸۹۸۱۱٦	۰۰۰.۰۰۱.۲٥٤.٥۸٥	STIRD-PLA GP ۲۷۲,٤/۱,۷٦ ۱.٦٥۸۷ ٥۸٦۷۰۰٤/K PLANET PINION GP ۲۷۲,٤/۱,۷٦ ۱.٦٥۸۷	۲	PCS	پینیون سیاره ای ۱.۷٦/۲۷۲.٤GP ۱.٦٥۸۷ جهت گیربکس سیاره ای درایو کوره واحد ٤ ش نقشه ۸۸۹۸۱۱٦ - ۲۲۷ P.N	۱۱٤۳۰٤۰ ٥۸۳		
۱٦	۳۰۰	٦۰۰۸٦۱٦	۰۰۰.۰۰۰.٦۷٥.۷۷٥	STRDELLE R ۱۸٥.۰/۳.۹٤ ۱.٦٥۸۷ ٥۸۷٥۷۷٥/A PINION SHAFT R ۱۸٥.۰/۳.۹٤ ۱.٦٥۸۷	۱	PC	شافت پینیون راست گرد ۱.٦٥۸۷ ۳.۹٤/۰. ۱۸٥R جهت گیربکس سیاره ای درایو کمکی کوره واحد ٤ ش نقشه ٦۰۰۸٦۱٦ - P.N ۳۰۰	۱۱٤۳۰٤۰ ٥۹۱		
۱۷	۳۰۲	٦۰۰۸٦۱٦	۰۰۰.۰۰۰.٦۷٥.۷٥۲	STIRNARD L ۲۲۰.۰/٤.۸۹ ۱.٦٥۸۷ ٥۸۷٥۷٥۲/B GEAR WHEEL L ۲۲۰.۰/٤.۸۹ ۱.٦٥۸۷	۱	PC	چرخ دنده چپ گرد ۲۲۰L ۱.٦٥۸۷ ٤.۸۹/۰. جهت گیربکس سیاره ای درایو کمکی کوره واحد ٤ ش نقشه ٦۰۰۸٦۱٦ - ۳۰۲ P.N	۱۱٤۳۰٤۰ ٥۹۲		
۱۸	٤۰۰	٦۰۰۸٦۱٦	۰۰۰.۰۰۰.٦٦٦.٥۱۲	STRDELLE L ۱٥۷.۰/۳.۳۱ ۱.٦٥۸۷ ٥۸۸٦٥۱۲ PINION SHAFT L ۱٥۷.۰/۳.۳۱ ۱.٦٥۸۷	۱	PC	شافت پینیون چپ گرد ۱.٦٥۸۷ ۳.۳۱/۰. ۱٥۷L جهت گیربکس سیاره ای درایو کمکی کوره واحد ٤ ش نقشه ٦۰۰۸٦۱٦ - P.N ٤۰۰	۱۱٤۳۰٤۰ ٥۹۳		

اسناد مناقصه شماره ۳۴۸۰۰۱ مورخه۱۴۰۵/۰۶/۱۰درخصوص شناسایی تامین کننده و فروشنده معتبر و واجد شرایط جهت خرید ۳۱ ردیف اقلام مربوط به گیربکس سیاره ای تیپ فلندر(FLENDER TYPE: P2DA SIZE: 23)مطابق خواسته های شرکت سیمان شرق و بشرح اسناد مناقصه و نقشه و مشخصات فنی پیوست.

۱۹	٤۰۲	٦۰۰۸٦۱٦	۰۰۰.۰۰۰.٦٦٦.٥۱۳	STIRNARD R ۱٥۷.۰/۲.۳۱ ۱.٦٥۸۷ ٥۸۸٦٥۱۳ GEAR WHEEL R ۱٥۷.۰/۲.۳۱ ۱.٦٥۸۷	۱	PC	چرخ دنده راست گرد ۱.٦٥۸۷ ۲.۳۱/۰. ۱٥۷R جهت گیربکس سیاره ای درایو کمکی کوره واحد ٤ ش نقشه ٦۰۰۸٦۱٦ - P.N ٤۰۲	۱۱٤۳۰٤۰ ٥۹٤		
۲۰	۲۸۱	٦۰۰۸٦۱٦	۰۰۰.۰۰۰.۳۸۹.۰۱٦	RS FXM ۲۰۰-٦۳SX/H۱۰۰ W ٥۸۱۳ ST BACKSTOP FXM ۲۰۰-٦۳SX/H۱۰۰ W ٥۸۱۳ ST	۲	PCS	بک استاپ گیربکس W ۱۰۰x/H٦۳-۲۰۰FXM ST٥۸۱۳ جهت گیربکس سیاره ای درایو کمکی کوره واحد ٤ ش نقشه P.N ۲۸۱ - ٦۰۰۸٦۱٦	۱۱٤۳۰٤۰ ٥۹٥		
۲۱	۱۰۰	٦۰۰۸٦۱٦	۰۰۰.۰۰۱.۲٦۰.۰۹٤	STRDWELLE DV۹.۰۳X٥V۷ ۱.٦٥۸۷ ٦۰٤٦۳٥٤/A PINION SHAFT DV۹.۰۳X٥V۷ ۱.٦٥۸۷	۲	PCS	شافت پینیون V۹D ۱.٦٥۸۷ ٥V۷x۰.۳ جهت گیربکس درایو کمکی کوره واحد ٤ ش نقشه P.N ۱۰۰ - ٦۰۰۸٦۱٦	۱۱٤۳۰٤۰ ٥۹٦		
۲۲	۱۰۲	٦۰۰۸٦۱٦	۰۰۰.۰۰۰.٥٦۰.۸٤۲	STIRNARD R ۱۳۰.۰/۲.٥٤ ۱.٦٥۸۷ ٥۸۸۰۸٤۲/B GEAR WHEEL R ۱۳۰.۰/۲.٥٤ ۱.٦٥۸۷	۲	PCS	چرخ دنده راست گرد ۱.٦٥۸۷ ۲.٥٤/۰. ۱۳۰R جهت گیربکس درایو کمکی کوره واحد ٤ ش نقشه ٦۰۰۸٦۱٦ - ۱۰۲ P.N	۱۱٤۳۰٤۰ ٥۹۷		
۲۳	۱۲۳	٦۰۰۸٦۱٦	۰۰۰.۰۰۰.۲٤۳.۳۲۲	O-RING OR۰۰۷٤ -۰۳ W٥۷۱۳ ۷۲NBR۸۷۲	٤	PCS	اورینگ W ۰۳-۰۰۷٤OR ۸۷۲NBR۷۲ ٥۷۱۳ جهت گیربکس درایو کمکی کوره واحد ٤ ش نقشه P.N ۱۲۳ - ٦۰۰۸٦۱٦	۱۱٤۳۰٤۰ ٥۹۸		
۲٤	۱۳۳	٦۰۰۸٦۱٦	۰۰۰.۰۰۰.۳۰٦.۰٥۲	WDR ۰٥٥*۰۷۰*۰۸ BAUMSL W ٥۷۱۰ V٥FPM٥۸٥ SHAFT SEAL ۰٥٥*۰۷۰*۰۸ BAUMSL W ٥۷۱۰	٦	PCS	سیلینگ شافت BAUMSL ۰۸x۰۷۰x۰٥٥ ٥۷۱۰W جهت گیربکس درایو کمکی کوره واحد ٤ ش نقشه ٦۰۰۸٦۱٦ - ۱۳۳- P.N ۲۳۳P.N ۱۳۲ - P.N	۱۱٤۳۰٤۰ ٥۹۹		
۲٥	۱۳٤	٦۰۰۸٦۱٦	۰۰۲.۹۰۰.۰۷٦.٦۰٦	WDR ٥٥*۷۰*۱۰ BAUM W ٥۷۱۰ V٥FKM٥۸٥ SHAFT SEAL ٥٥*۷۰*۱۰ BAUM W ٥۷۱۰ V٥FKM٥۸٥	٤	PCS	رینگ لاملار ۱۰x۰۷۰x۰٥٥ V٥ ٥۷۱۰BAUMSL W ٥۸٥FKM جهت گیربکس درایو کمکی کوره واحد ٤ ش نقشه ٦۰۰۸٦۱٦ - P.N ۱۳٤	۱۱٤۳۰٤۰ ٦۰۰		
۲٦	۱۳٥	٦۰۰۸٦۱٦	۰۰۰.۰۰۰.۳٤۷.۱۹۹	RING.AS ۰۷۰/۰۳.۱X۰.۸۲ W٥۷۳۰ FED-ST LAMELLAR RING .AS FEY ۰۷۰/۰۳.۱X۰.۸۲ W	٦	PCS	رینگ لاملار AS FEY W ۰.۸۲x۱. ۰۳/۰۷۰ جهت گیربکس درایو کمکی کوره واحد ٤ ش نقشه ٦۰۰۸٦۱٦ - ۱۳٥ P.N	۱۱٤۳۰٤۰ ٦۰۱		
۲۷	۱۳٦	٦۰۰۸٦۱٦	۰۰۰.۰٥۰.۰۲۷.٦٥۲	WDR ٤۳*٦۳*۸ BAUM V٥FPM٥۸٥ SHAFT SEAL ٤۳*٦۳*۸ BAUM V٥FPM٥۸٥	٤	PCS	سیلینگ شافت ۸x٦۲x٤۳ ٥۸٥FPM V٥BAUM جهت گیربکس درایو کمکی کوره واحد ٤ ش نقشه ٦۰۰۸٦۱٦ - ۱۳٦ P.N	۱۱٤۳۰٤۰ ٦۰۲		

اسناد مناقصه شماره ۳۴۸۰۰۱ مورخه۱۴۰۵/۰۶/۱۰درخصوص شناسایی تامین کننده و فروشنده معتبر و واجد شرایط جهت خرید ۳۱ ردیف اقلام مربوط به گیربکس سیاره ای تیپ فلندر(FLENDER TYPE: P2DA SIZE: 23)مطابق خواسته های شرکت سیمان شرق و بشرح اسناد مناقصه و نقشه و مشخصات فنی پیوست.

۲۸	۲۰۰	۶۰۰۸۶۱۶	۰۰۰.۰۰۱.۲۵۵.۲۴۷	WELLE D۱۰۹X۸۰۳ ۳٤CRNIMO ٦ K۳/K٤ ۰٦ SHAFT D۱۰۹X۸۰۳ ۳٤CRNIMO ٦ K۳/K٤ ۰٦	۲	PCS	شافت ۸۰۳x۱۰۹D ۰٦ ٤/K۳K ۰٦CRNIM۳٤ جهت گیربکس درایو کمکی کوره واحد ٤ ش نقشه ۶۰۰۸۶۱۶ - ۲۰۰ P.N	۱۱٤۳۰٤۰ ٦۰۳		
۲۹	۵	۵۲۷۳۷۷٤	۰۰۰.۰۰۰.٦۵۰.۵۹۱	REIBBELAG FB ۱۸۰ ۵۰۲۲ SH FRICTION LINING FB ۱۸۰ ۵۰۲۲ SH	۸	PCS	لاینر اصطکاکی ترمز FB ۱۸۰ ۵۰۲۲ SH جهت درایو کمکی کوره واحد ٤ ش نقشه ۵۲۷۳۷۷٤	۱۱٤۳۰٤۰ ٦۰٤		
۳۰	۱۰	۵۲۷۳۷۷٤	۰۰۰.۰۰۱.۲۵۹.۰۰۸	FED-Z ۳,٦X۱٤,٤x۸,۵ ۱.٤۳۱۰ ٦۰٤۵۵۰٦/-TENSION SPRING ۳,٦X۱٤,٤x۸,۵ ۱.٤۳۱۰	۸	PCS	فنر فشاری ترمز ۱.٤۳۱۰ ۸.۵X۱٤.٤x۳.٦ جهت درایو کمکی کوره واحد ٤ ش نقشه ۵۲۷۳۷۷٤	۱۱٤۳۰٤۰ ٦۰۵		
۳۱	۸۰۱	۸۸۹۸۱۱۶	۰۰۰.۰۰۱.۲۵٤.۸۲۷	STRDWELLE RP ۲٦۵,۰/۲,۲۷ ۱.٦۵۸۷ ٦۰٤۱۹۸۵/A PINION SHAFT RP ۲٦۵,۰/۲,۲۷ ۱.٦۵۸۷	۲	PCS	دنده شافت میانی ۱.٦۵۸۷ ۲٦۵.۰.۲.۲۷RP جهت گیربکس سیاره ای درایو کوره واحد ٤ ش نقشه ۸۸۹۸۱۱۶ - ۸۰۱ P.N	۱۱٤۳۰٤۰ ٦۳۵		
قیمت کل(ریال)										

۲-۳) فروشنده مکلف است بعد از اجرای کامل موضوع قرارداد فاکتور رسمی ارائه دهد.

تبصره۳) بهای اقلام مورد معامله قطعی بوده و تحت هیچ عنوان اعم از نوسانات نرخ ارز یا افزایش هزینه های گمرگی یا تحریم یا هر عنوان دیگر قابل افزایش نمی باشد.

ماده۴)نحوه پرداخت:

۲۰درصد مبلغ پیشنهادی به عنوان پیش پرداخت پس از دریافت ضمانتنامه بانکی معتبر و بدون قیدو شرط با قید قابلیت ضبط، برداشت، مشروط نبودن و برگشت ناپذیر با مدت اعتبار سه ماه و قابل تمدید به دفعات بنا به درخواست مناقصه گزار(شناسه ملی ۱۰۱۰۰۲۳۳۷۲۵و شماره ثبت ۴۵۹۲۸ تاریخ ثبت ۱۳۹۱/۰۵/۲۸) و مابقی پس از ارسال اقلام فوق با تایید دستگاه نظارت قرارداد و کسر کسورات قرارداد و رسید انبار فروشنده در مدت زمان ۱۵ روز بعد از تایید دستگاه نظارت قرارداد به حساب معرفی شده توسط فروشنده صورت خواهد گرفت.

ماده ۵) تضامین قرارداد و نحوه آزادسازی:

۱-۵)فروشنده موظف است جهت تضمین انجام تعهدات موضوع قرارداد ، همزمان با امضای قرارداد تضمین مورد قبول خریدار که شامل یک فقره چک بانکی بنفش ثبت و تایید شده در سامانه صیاد در وجه خریدار ، بدون هیچ گونه توضیحات اضافی و به تاریخ انتهای قرارداد و معادل ۱/۵ برابر مبلغ ریالی کل قرارداد را به خریدار تحویل نماید که چک مذکور تا شش ماه بعد از اجرای کامل موضوع قرارداد نزد خریدار باقی مانده و سپس در صورت عدم بروز هرگونه ایرادی و یا عدم نیاز به کسر کسورات قرارداد با تایید دستگاه نظارت قرارداد به فروشنده مسترد می گردد.

۲-۵) قرارداد حاضر پس از اخذ تضامین مربوطه از فروشنده و سپس ابلاغ و مبادله و امضاء نسخ ، قابل اجرا است.

ماده۶) دستگاه نظارت قرارداد:

نظارت بر اجرای مفاد و روند تعهدات طرفین در قرارداد برعهده مدیر مکانیک و با تایید معاونت فنی و تولید (مدیر مجتمع) و تصویب مدیر عامل خریدار می باشدکه باید بصورت گزارش کتبی ارائه گردد بدیهی است نظارت مذکور رافع مسئولیتهای فروشنده نمی باشد.

ماده ۷)کسورات قرارداد:

۱-۷) فروشنده مبلغ قرارداد را با درنظر گرفتن کلیه کسورات قرارداد و مطابق با اجرای موضوع قرارداد اعلام نموده است و هرگونه کسورات قانونی قرارداد برعهده و هزینه فروشنده می باشد و خریدار هیچ گونه مسئولیتی درخصوص کسورات قرارداد ندارد.

تبصره ۴) کلیه کسورات قانونی این قرارداد برعهده فروشنده می‌باشد بجز مالیات بر ارزش افزوده که بر عهده خریدار است و پرداخت آن منوط به ارائه گواهی معتبر و رسمی ثبت نام مالیات بر ارزش افزوده توسط فروشنده و ارائه فاکتور الکترونیکی ثبت و تاییدشده در سامانه مودیان مالیاتی مطابق با قوانین مالیاتی جمهوری اسلامی ایران می‌باشد.

ماده ۸) تعهدات خریدار:

۱-۸) پرداخت به موقع طبق زمانبندی مقرر در ماده ۴ قرارداد .

۲-۸) اظهارنظر فنی و تایید در خصوص گزارش های ارسال شده توسط فروشنده حداکثر ظرف مدت ۱۰ روز کاری

۳-۸) پرداخت مالیات بر ارزش افزوده مطابق مفاد تبصره ۴ ماده ۷ قرارداد .

ماده۹) تعهدات فروشنده:

۱-۹) فروشنده متعهد می گردد کالای موضوع قرارداد را طبق اسناد و مدارک قرارداد تهیه و به خریدار تحویل نماید.

۲-۹) فروشنده موظف به ارائه مدارک معتبر و ارائه گواهی از اتحادیه و صنف مربوطه همزمان با انعقاد قرارداد می باشد.

۳-۹) هزینه رفع معایب و نواقص و خسارات ناشی از نقص اقلام موضوع قرارداد برعهده و مسئولیت و هزینه فروشنده می باشد.

۴-۹) درصورت ضبط و وصول تضامین به هر یک از دلایل معنونه در قرارداد ، مسئولیت فروشنده و مدیران آن حسب ماده ۴۰۳ قانون تجارت ، تضامنی بوده و خریدار دررجوع به هر یک از آنان بصورت منفردا و یا مجتمعا مخیر خواهد بود . فروشنده و مدیران آن با امضای این قرارداد ، مراتب مسئولیت تضامنی خود با شخص حقوقی را در جبران کلیه خسارات اعلامی از سوی خریدار، قبول و اعلام داشته و حق هرگونه اعتراضی را از خود سلب و ساقط می نمایند .

ماده۱۰)واگذاری و انتقال به غیــر:

فروشنده مجاز نیست که بدون اخذ موافقت کتبی خریدار تمام یا قسمتی از موضوع قرارداد را به اشخاص حقیقی و یا حقوقی دیگر واگذار نماید.

ماده ۱۱)فورس مــاژور:

۱-۱۱) در موارد فورس ماژور که ادامه قرارداد حاضر، بدلیل اتفاقاتی که خارج از کنترل معقول برای یکی از طرفین غیر ممکن گردد طرف ذیربط مراتب را ظرف مدت ۱۵ روز کتباً بطرف مقابل اعلام خواهد نمود . در صورت بروز موارد پیش بینی نشده از قبیل عوامل قهریه طبیعی، عوامل غیرقابل اجتناب که عرفاً فورس ماژور تلقی و منجر به تعطیلی محل کار هریک از طرفین گردد پس از اثبات، طرفین می توانند بنحو مرضی الطرفین توافقاتی معمول دارند ضمنا نوسانات اقتصادی و تحریمها و بیماری های واگیردار مانند کووید ۱۹ مشمول ماده فورس ماژور نمی باشد .توضیح اینکه چنانچه زمان فورس ماژور بیش از یک ماه بطول بیانجامد حق فسخ قرارداد برای خریدار بوجود می آید و خریدار می تواند از حق

فسخ خود استفاده نماید .

۲-۱۱)چگونگی تسویه حساب و برآورد هزینه ها و کارهای انجام شده طبق توافق نمایندگان طرفین قرارداد صورت می‌گیرد.

۳-۱۱) مقدارزمان تعلیق موضوع قرارداد بعلت بروزحوادث قهری و چگونگی ادامه قرارداد و یا خاتمه دادن به آن براساس توافق نمایندگان طرفین قرارداد است

ماده ۱۲) فسخ قرارداد:

خریدار با توجه به موارد مصرحه ذیل در هر مرحله‌ای از کار می تواند ضمن اخذ خسارت و ضرر و زیان خود از محل مطالبات یا تضامین و یا سپرده های فروشنده، قرارداد را بصورت یکطرفه بدون نیاز به دستور و یا حکمی از مراجع قضایی فسخ نماید و فروشنده حق هرگونه اعتراضی را از خود سلب و ساقط می‌نماید.

۱-۱۲) تأخیـــر در عدم اجرای تعهدات موضوع قرارداد توسط فروشنده، به نحوی که امکان موجبات زیان خریدار بوجود آیـد. ملاک تشخیص تاخیر در اجرای تعهدات یا عدم توانائی فروشنده برای اجرای قرارداد، اظهار نظر دستگاه نظارت قرارداد و تصویب مدیرعامل خریدار بوده و فروشنده حق هر گونه اعتراض یا طرح دعوی را در این مورد از خود ساقط نموده و می نماید . ضمناً در این رابطه چنانچه خسارتی به خریدار وارد شود، فروشنده ضامن جبران خسارت و پرداخت معادل آن بعنوان وجه التزام تخلف از شرط قرارداد خواهد بود و دفاتر خریدار مبنای میزان محاسبه خسارت و وجه التزام تخلف از شرط قرارداد می باشد.

۲-۱۲) هرگاه خریدار تشخیص دهد که فروشنده بعلت عدم توانایی مالی و فنی ، قصور یا عدم انجام تعهدات ، بروز فساد مالی فروشنده در ارتباط با اشخاص ثالث دررابطه با قرارداد، ضعف آشکار در انجام تعهدات موضوع قرارداد بنا به تشخیص دستگاه نظارت قرارداد ، اخذ رشوه و پورسانت، محکومیت قضایی فروشنده به نحوی که باعث ایجاد اختلال دراجرای تعهدات قرارداد گردد و فروشنده قادر به اجرای موضوع قرارداد نباشد و ادامه همکاری با وی موجب ضرر و زیان خریدار شود.

۳-۱۲) انتقال موضوع قرارداد بصورت کلی یا جزئی به شخص ثالث بدون مجوز کتبی خریدار .

۴-۱۲)عدم اجرای دستورات دستگاه نظارت قرارداد .

۵-۱۲)عدم ایفای تعهدات مندرج در قرارداد مطابق با گزارش دستگاه نظارت قرارداد.

۶-۱۲)تأیید اعسار یا اعلام ورشکستگی و انحلال شرکت فروشنده توسط مقامات مربوطه با تقبل ضرر و زیان خریدار از سوی فروشنده.

۷-۱۲)عدم شروع بکار فروشنده پس از رفع وضعیت قهری موضوع ماده ۱۱ و ابلاغ شروع کار از سوی خریدار.

۸-۱۲) درصورتی که فروشنده مرتکب یکی از اعمال بند ه ماده ۲ و ماده ۱ آیین نامه پیشگیری و مبارزه با رشوه و پورسانت مورخ ۱۳۸۳/۰۹/۰۱ شود .

۹-۱۲) اقرار فروشنده به عدم شمول ممنوعیت موضوع قانون راجع به منع مداخله وزراء و نمایندگان مجلس و کارمندان دولت در معاملات دولتی و کشوری مصوب دی ماه ۱۳۳۷ و درصورت کشف خلاف واقع ، مشمول فسخ قرارداد و پرداخت خسارت مربوطه مطابق گزارش دستگاه نظارت قرارداد خواهد بود .

تبصره ۵) احراز عدم توانایی فروشنده، با تشخیص خریداربوده و فروشنده درخصوص آن حق هیچگونه اعتراضی نخواهد داشت. در این رابطه چنانچه خسارتی به خریدار وارد شود، فروشنده ضامن جبران خسارت و پرداخت معادل آن بعنوان وجه التزام تخلف از شروط قرارداد خواهد بود. دفاتر خریدار مبنای میزان محاسبه خسارت و میزان وجه التزام تخلف از شرط قرارداد می‌باشد.

تبصره ۶) درصورت فسخ قرارداد به دلیل هر یک از موارد مطروحه در قرارداد ، کلیه خسارات وارده به خریدار از محل تضامین یا سپرده ها یا

مطالبات فروشنده در پرداخت های متوالی یا متناوب (به صلاحدید خریدار) با تعیین میزان و مقدار آن از سوی دستگاه نظارت قرارداد با تصویب مدیریت عامل خریدار ، ضبط و وصول خواهد شد و فروشنده حق هرگونه اعتراضی را از خود سلب و ساقط می نماید .

ماده۱۳)حل اختلاف:

در صورت بروز اختلاف ناشی از انعقاد ، اعتبار، فسخ ، نقص، تفسیر و اجرا و همچنین اختلافات احتمالی ابتدا طرفین قرارداد سعی خواهند کرد موضوع را طریق مذاکره حل و فصل نمایند ، درصورت عدم رفع اختلاف ، هر یک از طرفین می توانند موضوع را از طریق مراجع قضایی پیگیری نمایند. قانون حاکم برکلیه قراردادها تابع قوانین جمهوری اسلامی ایران می باشد. .به منظور جلوگیری از بروز وقفه در امور ، فروشنده و خریدار متعهد می باشند تا زمان اتمام حل اختلاف و نتیجه نهایی درصورت تایید داور یا مقام ناصب داور، تعهدات خود را مطابق با مفاد قرارداد اجرا نمایند .

ماده۱۴)مقررات قانونی:

۱-۱۴) فروشنده با علم واطلاع از هرنوع منع قانونی نسبت به امضا این قرارداد اقدام می نماید وکلیه مسولیتهای ناشی از عدم رعایت قوانین موضوعه کشور از جمله استاندارد ایران و همچنین رعایت مقررات قانون کار و تامین اجتماعی در ارتباط با حوادث ناشی از کار کارگران به عهده فروشنده است.

۲-۱۴)هر گونه مکاتبات و یا دستور کارهایی که متعاقباً با توافق طرفین از سوی خریدار به فروشنده ابلاغ خواهد شد.

۳-۱۴) ارائه تصویر روزنامه رسمی مربوط به آخرین تغییرات و دارندگان صاحبان امضاهای مجاز فروشنده در زمان انعقاد قرارداد ضروری است.

ماده۱۵)مالکیت اسناد ومدارک وپیوست‌ها:

این قرارداد شامل اسناد و مدارک زیر است:

۱-۱۵)قرارداد حاضر.

۲-۱۵)اسناد تکمیلی که حین انجام خدمات، در چارچوب قرارداد و به منظور انجام آن بین نمایندگان رسمی دو طرف قرارداد، مبادله می‌شود، اعم از صورت مجالس و قراردادهای الحاقی و هر سند و مدرک دیگری نیز که در راستای انجام قرارداد حاضر ضروری بوده یا تنظیم گردد در حکم اسناد و مدارک منضم به این قرارداد می‌باشد.

۳-۱۵)کلیه مکاتبات و گزارش های مصوب و همچنین گزارش اقدامات انجام شده در جهت انجام موضوع این قرارداد.

تبصره۷)در راستای انجام عملیات موضوع قرارداد کلیه مدارک و اسناد، وسایل و تجهیزات خریدار که در اختیارفروشنده قرار گرفته است ، انحصارا"درمالکیت خریدار می‌باشد و فروشنده حق واگذاری آن به غیر ندارد و در صورت تخلف، خریدار می‌تواند قرارداد را راسا" فسخ نماید و خسارات وارده را ازمحل سپرده حسن انجام کار که در اختیار خریدار می‌باشد قابل برداشت می‌باشد. ضمناً نوع خسارت و میزان آن طبق نظر دستگاه نظارت خریدار ملاک خواهد بود و فروشنده حق هر گونه ادعا در این رابطه را از خود ساقط نموده و می‌نماید.

ماده۱۶)اصلاحیه ها:

هر گونه اصلاحیه و تجدید نظر در این قرارداد از طریق تنظیم صورتجلسه که با امضای طرفین قرارداد بوده قابل اجرا و معتبر خواهد بود.

ماده۱۷) نشانی و مکاتبات طرفین قرارداد:

کلیه مکاتبات و هرگونه مطالبی که به تعهدات طرفین قرارداد مربوط می‌شود و لازم است به طرف دیگر ابلاغ گردد، هنگامی ابلاغ شده تلقی می-

گردد که بصورت کتبی به نماینده معرفی شده آن تسلیم و رسید دریافت گردد یا با پست سفارشی به نشانی مندرج در قرارداد ارسال گردد. نشانی دو طرف قرارداد همان است که در مقدمه قرارداد ذکر شده است و طرفین متعهدمی‌باشند که هرگونه تغییر آدرس را سریعاً و کتباً به طرف مقابل اعلام نمایند . تا وقتی که نشانی جدید به طرف دیگر اعلام نشده است مکاتبات به نشانی قبلی ارسال می شود و دریافت شده تلقی می گردد .

ماده ۱۸) نسخ قرارداد:

قرارداد حاضر در ۱۸ ماده و ۷تبصره و در۳ نسخه که دارای اعتبار یکسان می باشند در شهر مشهد در مورخه .....تنظیم و کلیه صفحات آن توسط دارندگان امضا مجاز امضاء و مهر گردیده است و بین طرفین و قائم مقام قانونی آنها قطعی و معتبر و لازم الاجرا و لازم الاتباع می باشد.

اسناد مناقصه شماره ۳۴۸۰۰۱ مورخه۱۴۰۵/۰۶/۱۰درخصوص شناسایی تامین کننده و فروشنده معتبر و واجد شرایط جهت خرید ۳۱ ردیف اقلام مربوط به گیربکس سیاره ای تیپ فلندر(FLENDER TYPE: P2DA SIZE: 23)مطابق خواسته های شرکت سیمان شرق و بشرح اسناد مناقصه و نقشه و مشخصات فنی پیوست.	

فرم برچسب پاکت های مناقصه /مزایده/ فراخوان

لطفا به صورت جداگانه بریده و پس از تکمیل اطلاعات، بر روی پاکت مربوطه بچسبانید.

پاکت (الف): پاکت ضمانت‌نامه بانکی و سایر اسناد

موضوع مناقصه /**مزایده/ فراخوان** : **شماره مناقصه/مزایده/ فراخوان :**

نام شرکت: .....

آدرس: .....

تلفن: ..... فکس: ..... همراه: .....

پاکت (ب): پاکت ارزیابی

موضوع مناقصه/**مزایده/ فراخوان** :

نام شرکت: .....

آدرس: .....

تلفن: ..... فکس: ..... همراه: .....

پاکت (ج): پاکت پیشنهاد قیمت

موضوع مناقصه/**مزایده/ فراخوان** :

نام شرکت: .....

آدرس: .....

تلفن: ..... فکس: ..... همراه: .....

پیوست ها:

نقشه ها و مشخصات فنی گیربکس سیاره ای:

تذکر: پرینت نقشه ها و مشخصات فنی پیوست نیاز نمی باشد و صرفاً جهت اطلاع، راهنمایی و استفاده پیشنهاد دهندگان می باشد.

اسناد مناقصه شماره ۳۴۸۰۰۱ مورخه۱۴۰۵/۰۶/۱۰درخصوص شناسایی تامین کننده و فروشنده معتبر و واجد شرایط جهت خرید ۳۱ ردیف اقلام مربوط به گیربکس سیاره ای تیپ فلندر(FLENDER TYPE: P2DA SIZE: 23)مطابق خواسته های شرکت سیمان شرق و بشرح اسناد مناقصه و نقشه و مشخصات فنی پیوست.	

عکس پلاک روی گیربکس سیاره ای:

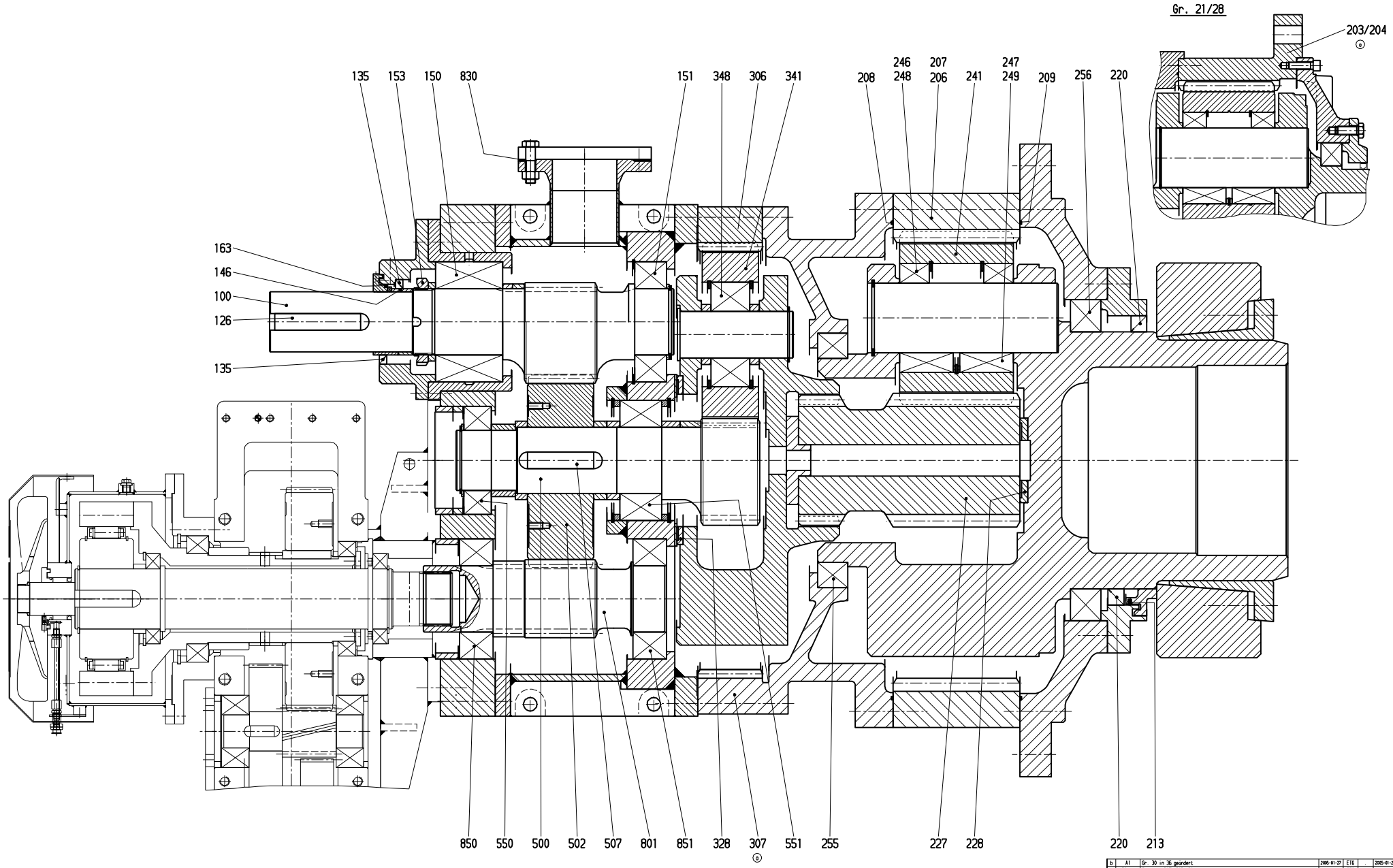

Teile nach Ersatzteilliste je nach Ausführung

Parts acc. to spare parts list depending on design

b	A1	Gr. 30 in 36 geändert	2005-01-27	ET6	2005-01-27
a	BB/MI	Teil-Nr. 307, 203, 204 hinzu	2002-09-10	ST6	2002-09-12
f	Feld	Änderungsbeschreibung	Datum	Name	Norm 2000-08-30

Zul. Abweichungen für Maße ohne Tol.-Angaben: mittel DIN 7168 — Auftr.-Nr. — geschärft

FLENDER

Nicht gekennzeichnete Oberflächen: Rauhwerte Ra in µm

Gez	EKD	2000-08-25	Linde
Gepr.	EKD	2000-08-28	Vahlbrock
Norm	NDR	2000-08-28	Lueer
Abt.	Datum		Name

Maßstab - Gewicht (kg)

Trägheitsmoment J (kgm²)

Basis-Nr. / Modell-Nr. — Ä1 / Anz. — Teil

Maße in mm

Werkstoff / -Nr.

Benennung: ERSATZTEIL-ZCHNG

Schl.-Nr.: 0110

P25A Gr. 21 - 36 / K UF Gr. 5 - 8

Rohteil nach Zeichnung — sonst nach Zeichnung

Format Art Zeichnungs-Nr. A1: 5 | 8 898 116 | b

Ersatz für — Aus Zchng. 5 867 733

Schutzvermerk ISO 16016 beachten

PLOTT-DATUM: 05-MAY-2006 16:36:15 H. Raschig/MDZ

/AB/EL/KS/AN/UX

119/428

FLENDER	**Ersatzteilliste (EL)** Spare parts list	**Bauart** Type **P2DA** **Größe** Size **23,0** **Übersetzung** ratio **82,781**	**Seite** Page 1/2

Bei Korrespondenz bitte angeben
Please quote in correspondence **EL 4190294-080 DE/EN**

Hierzu gehört Zeichnungs-Nr.
Please refer to DWG No. **8898116**

	Teil-Nr. Part No.	Menge No. off		Benennung Description		Zeichnungs-Nr. Drawings No.	Material-Nr. Ident no.	Gw(kg) Weight
E	0100	1	ST	STRDWELLE RP 265,0/2,27	1.6587	5867954/-	000.001.254.583	80,0
				PINION SHAFT RP 265,0/2,27 1.6587				
E	0135	1	ST	WDR 130X160X15 BAUM W 5710 75FPM585			000.000.781.850	0,2
				SHAFT SEAL 130X160X15 BAUM W 5710				
E	0146	1	ST	RING 120,0X130,0X041,5W	34CrNiMo6	5867054/E	000.000.626.178	0,6
				RING 120,0X130,0X041,5W 34CrNiMo6				
E	0150	1	ST	EINBAUS 32226/DF	ST-KAEF		000.000.379.980	24,4
				PAIRED TAPER ROLLER BEARINGS 32226/DF				
E	0151	1	ST	WAELZL 2222 NU EC D 5412 SKF/FAG			000.000.379.912	6,7
				ROLLING CONTACT BEARING 2222 NU EC D 541				
E	0163	3	ST	RING,AS 160/06,0X1,5 W 5730 FED-ST			000.000.347.212	0,0
				LAMELLAR RING, AS (FEY) 160/06,0X1,5 W 5				
E	0206	1	ST	STIRNRAD,INVERZ P2 23	34CrNiMo6	5867715/E	000.001.288.546	353,0
				INTERN.TOOTHED GEAR WHEEL P2 23				
E	0208	3,00	M	SCHNUR-RD 04,0 72NBR872			000.000.307.199	0,1
				ROUND CORD 04,0	72NBR872			
E	0209	3,00	M	SCHNUR-RD 04,0 72NBR872			000.000.307.199	0,1
				ROUND CORD 04,0	72NBR872			
E	0213	3	ST	RING,AS 500/12,0X2,5 W 5730 FED-ST			000.000.347.005	0,4
				LAMELLAR RING, AS (FEY) 500/12,0X2,5 W 5				
E	0220	1	ST	WDR 460X500X20 C D 3760 72NBR902			000.000.770.403	1,2
				SHAFT SEAL 460X500X20 C D 3760 72NBR902				
E	0227	1	ST	STIRD-PLA GP 272,4/1,76	1.6587	5867004/K	000.001.254.585	88,5
				PLANET PINION GP 272,4/1,76 1.6587				
E	0228	1	ST	RING-ANLAUF 065X160X10	PTFE/25C	5867035/A	000.000.626.157	0,3
				TIE PIECE 065X160X10 PTFE/25C				
E	0241	3	ST	STIRD-PLA GP 272,4/1,76	1.6587	5867005/I	000.001.254.588	91,0
E	0249	6	ST	WAELZL185030 SL C3 2S			000.000.379.902	13,3
				ROLLING CONTACT BEARING185030 SL C3 2S				
E	0255	1	ST	WAELZL181872 SL			000.000.379.268	11,7
				ROLLING CONTACT BEARING181872 SL				
E	0256	1	ST	WAELZL181896 SL			000.000.380.873	35,2
				ROLLING CONTACT BEARING181896 SL				
E	0306	1	ST	STIRNRAD,INVERZ PN 23	34CrNiMo6	5867033/H	000.000.807.254	131,0
				INTERN.TOOTHED GEAR WHEEL PN 23				
E	0328	1	ST	RING-ANLAUF 255X315X10	PTFE/25C	5867048/B	000.000.626.164	0,4
				TIE PIECE 255X315X10 PTFE/25C				
E	0341	3	ST	STIRD-PLA GP 231,5/2,20	1.6587	5867024/A	000.001.260.263	32,8
				PLANET PINION GP 231,5/2,20 1.658				
E	0348	3	ST	WAELZL 22320 E/C3 D 635 SKF			000.000.380.341	13,0
				ROLLING CONTACT BEARING 22320 E/C3 D 635				
E	0500	1	ST	STRDW-PLA GP 231,5/2,20	1.6587	5867963/B	000.001.260.265	53,0
				PLANETARY CYLINDRICAL WHEEL SHAFT GP 231				
E	0502	1	ST	STIRNRAD LP 265,0/2,27	1.6587	5867955/A	000.001.254.634	88,8
				GEAR WHEEL LP 265,0/2,27 1.6587				

Die mit * gekennzeichneten Teile gehören zu einer Baugruppe (G). Die Baugruppe ist nur komplett auszutauschen.
The parts marked with * belong to a subassembly (G). The subassemblymust be replaced complete.

FLENDER	**Ersatzteilliste (EL)** Spare parts list	**Bauart** Type **P2DA** **Größe** Size **23,0** **Übersetzung** ratio **82,781**	**Seite** Page 2/2

Bei Korrespondenz bitte angeben
Please quote in correspondence **EL 4190294-080 DE/EN**

Hierzu gehört Zeichnungs-Nr.
Please refer to DWG No. **8898116**

	Teil-Nr. Part No.	Menge No. off		Benennung Description	Zeichnungs-Nr. Drawings No.	Material-Nr. Ident no.	Gw(kg) Weight
E	0550	1	ST	WAELZL 2222 NU EC D 5412 SKF/FAG ROLLING CONTACT BEARING 2222 NU EC D 541		000.000.379.912	6,7
E	0551	1	ST	WAELZL 23224 CC/W33 D 635 MET-KAEF ROLLING CONTACT BEARING 23224 CC/W33 D 6		000.000.380.135	12,3
E	0801	1	ST	STRDWELLE RP 265,0/2,27 1.6587 PINION SHAFT RP 265,0/2,27 1.6587	6041985/A	000.001.254.827	48,2
E	0850	1	ST	WAELZL 32224 D 720 ST-KAEF ROLLING CONTACT BEARING 32224 D 720		000.000.380.754	9,0
E	0851	1	ST	WAELZL 32224 D 720 ST-KAEF ROLLING CONTACT BEARING 32224 D 720		000.000.380.754	9,0

A. Friedr.Flender AG, D 46393 Bocholt,
Tel.+ 49(0)2871/92-0, Fax+ 49(0)2871/922596, http://www.flender.com

Datum Date	HOBBOLD, HEINRICH	2681
05.05.2006	Rev.:	

FLENDER	**Ersatzteilliste (EL)** Spare parts list	**Bauart** Type **Größe** Size **Übersetzung** ratio	**Seite** Page 1/1

Bei Korrespondenz bitte angeben
Please quote in correspondence

EL 4190294-100 DE/EN

Hierzu gehört Zeichnungs-Nr.
Please refer to DWG No.

	Teil-Nr. Part No.	Menge No. off		Benennung Description	Zeichnungs-Nr. Drawings No.	Material-Nr. Ident no.	Gw(kg) Weight
E	0610	2	ST	LAGER-GEL GE120 UK-2RS BALL AND SOCKET JOINT GE120 UK-2RS		000.000.389.180	8,0
E	0611	4	ST	LAGER-GEL GE 90 UK-2RS BALL AND SOCKET JOINT GE 90 UK-2RS		000.000.389.178	2,7
E	0612	2	ST	DICHTUNG CD120 CELLASTO SEAL CD120 CELLASTO		000.000.625.296	0,1
E	0613	8	ST	DICHTUNG CD090 CELLASTO SEAL CD090 CELLASTO		000.000.625.269	0,1

Die mit * gekennzeichneten Teile gehören zu einer Baugruppe (G). Die Baugruppe ist nur komplett auszutauschen.
The parts marked with * belong to a subassembly (G). The subassemblymust be replaced complete.

A. Friedr.Flender AG, D 46393 Bocholt,
Tel.+ 49(0)2871/92-0, Fax+ 49(0)2871/922596, http://www.flender.com

Datum Date	HOBBOLD, HEINRICH	2681
05.05.2006	Rev.:	

FLENDER	**Ersatzteilliste (EL)** Spare parts list	**Bauart** Type **P2DA** **Größe** Size **23,0** **Übersetzung** ratio **82,781**	**Seite** Page 1/2

Bei Korrespondenz bitte angeben
Please quote in correspondence **EL 4190294-120 DE/EN**

Hierzu gehört Zeichnungs-Nr.
Please refer to DWG No. **8898116**

	Teil-Nr. Part No.	Menge No. off		Benennung Description		Zeichnungs-Nr. Drawings No.	Material-Nr. Ident no.	Gw(kg) Weight
E	0100	1	ST	STRDWELLE RP 265,0/2,27	1.6587	5867954/-	000.001.254.583	80,0
				PINION SHAFT RP 265,0/2,27 1.6587				
E	0135	1	ST	WDR 130X160X15 BAUM W 5710 75FPM585			000.000.781.850	0,2
				SHAFT SEAL 130X160X15 BAUM W 5710				
E	0146	1	ST	RING 120,0X130,0X041,5W	34CrNiMo6	5867054/E	000.000.626.178	0,6
				RING 120,0X130,0X041,5W 34CrNiMo6				
E	0150	1	ST	EINBAUS 32226/DF	ST-KAEF		000.000.379.980	24,4
				PAIRED TAPER ROLLER BEARINGS 32226/DF				
E	0151	1	ST	WAELZL 2222 NU EC D 5412 SKF/FAG			000.000.379.912	6,7
				ROLLING CONTACT BEARING 2222 NU EC D 541				
E	0163	3	ST	RING,AS 160/06,0X1,5 W 5730 FED-ST			000.000.347.212	0,0
				LAMELLAR RING, AS (FEY) 160/06,0X1,5 W 5				
E	0206	1	ST	STIRNRAD,INVERZ P2 23	34CrNiMo6	5867715/E	000.001.288.546	353,0
				INTERN.TOOTHED GEAR WHEEL P2 23				
E	0208	3,00	M	SCHNUR-RD 04,0 72NBR872			000.000.307.199	0,1
				ROUND CORD 04,0	72NBR872			
E	0209	3,00	M	SCHNUR-RD 04,0 72NBR872			000.000.307.199	0,1
				ROUND CORD 04,0	72NBR872			
E	0213	3	ST	RING,AS 500/12,0X2,5 W 5730 FED-ST			000.000.347.005	0,4
				LAMELLAR RING, AS (FEY) 500/12,0X2,5 W 5				
E	0220	1	ST	WDR 460X500X20 C D 3760 72NBR902			000.000.770.403	1,2
				SHAFT SEAL 460X500X20 C D 3760 72NBR902				
E	0227	1	ST	STIRD-PLA GP 272,4/1,76	1.6587	5867004/K	000.001.254.585	88,5
				PLANET PINION GP 272,4/1,76 1.6587				
E	0228	1	ST	RING-ANLAUF 065X160X10	PTFE/25C	5867035/A	000.000.626.157	0,3
				TIE PIECE 065X160X10 PTFE/25C				
E	0241	3	ST	STIRD-PLA GP 272,4/1,76	1.6587	5867005/I	000.001.254.588	91,0
E	0249	6	ST	WAELZL185030 SL C3 2S			000.000.379.902	13,3
				ROLLING CONTACT BEARING185030 SL C3 2S				
E	0255	1	ST	WAELZL181872 SL			000.000.379.268	11,7
				ROLLING CONTACT BEARING181872 SL				
E	0256	1	ST	WAELZL181896 SL			000.000.380.873	35,2
				ROLLING CONTACT BEARING181896 SL				
E	0306	1	ST	STIRNRAD,INVERZ PN 23	34CrNiMo6	5867033/H	000.000.807.254	131,0
				INTERN.TOOTHED GEAR WHEEL PN 23				
E	0328	1	ST	RING-ANLAUF 255X315X10	PTFE/25C	5867048/B	000.000.626.164	0,4
				TIE PIECE 255X315X10 PTFE/25C				
E	0341	3	ST	STIRD-PLA GP 231,5/2,20	1.6587	5867024/A	000.001.260.263	32,8
				PLANET PINION GP 231,5/2,20 1.658				
E	0348	3	ST	WAELZL 22320 E/C3 D 635 SKF			000.000.380.341	13,0
				ROLLING CONTACT BEARING 22320 E/C3 D 635				
E	0500	1	ST	STRDW-PLA GP 231,5/2,20	1.6587	5867963/B	000.001.260.265	53,0
				PLANETARY CYLINDRICAL WHEEL SHAFT GP 231				
E	0502	1	ST	STIRNRAD LP 265,0/2,27	1.6587	5867955/A	000.001.254.634	88,8
				GEAR WHEEL LP 265,0/2,27 1.6587				

Die mit * gekennzeichneten Teile gehören zu einer Baugruppe (G). Die Baugruppe ist nur komplett auszutauschen.
The parts marked with * belong to a subassembly (G). The subassemblymust be replaced complete.

FLENDER	**Ersatzteilliste (EL)** Spare parts list	**Bauart** Type **P2DA** **Größe** Size **23,0** **Übersetzung** ratio **82,781**	**Seite** Page 2/2

Bei Korrespondenz bitte angeben
Please quote in correspondence **EL 4190294-120 DE/EN**

Hierzu gehört Zeichnungs-Nr.
Please refer to DWG No. **8898116**

	Teil-Nr. Part No.	Menge No. off		Benennung Description	Zeichnungs-Nr. Drawings No.	Material-Nr. Ident no.	Gw(kg) Weight
E	0550	1	ST	WAELZL 2222 NU EC D 5412 SKF/FAG ROLLING CONTACT BEARING 2222 NU EC D 541		000.000.379.912	6,7
E	0551	1	ST	WAELZL 23224 CC/W33 D 635 MET-KAEF ROLLING CONTACT BEARING 23224 CC/W33 D 6		000.000.380.135	12,3
E	0801	1	ST	STRDWELLE RP 265,0/2,27 1.6587 PINION SHAFT RP 265,0/2,27 1.6587	6041985/A	000.001.254.827	48,2
E	0850	1	ST	WAELZL 32224 D 720 ST-KAEF ROLLING CONTACT BEARING 32224 D 720		000.000.380.754	9,0
E	0851	1	ST	WAELZL 32224 D 720 ST-KAEF ROLLING CONTACT BEARING 32224 D 720		000.000.380.754	9,0

A. Friedr.Flender AG, D 46393 Bocholt,
Tel.+ 49(0)2871/92-0, Fax+ 49(0)2871/922596, http://www.flender.com

Datum Date	HOBBOLD, HEINRICH	2681
05.05.2006	Rev.:	

FLENDER	**Ersatzteilliste (EL)** Spare parts list	**Bauart** Type **Größe** Size **Übersetzung** ratio	**Seite** Page 1/1

Bei Korrespondenz bitte angeben
Please quote in correspondence

EL 4190294-140 DE/EN

Hierzu gehört Zeichnungs-Nr.
Please refer to DWG No.

	Teil-Nr. Part No.	Menge No. off		Benennung Description	Zeichnungs-Nr. Drawings No.	Material-Nr. Ident no.	Gw(kg) Weight
E	0610	2	ST	LAGER-GEL GE120 UK-2RS BALL AND SOCKET JOINT GE120 UK-2RS		000.000.389.180	8,0
E	0611	4	ST	LAGER-GEL GE 90 UK-2RS BALL AND SOCKET JOINT GE 90 UK-2RS		000.000.389.178	2,7
E	0612	2	ST	DICHTUNG CD120 CELLASTO SEAL CD120 CELLASTO		000.000.625.296	0,1
E	0613	8	ST	DICHTUNG CD090 CELLASTO SEAL CD090 CELLASTO		000.000.625.269	0,1

Die mit * gekennzeichneten Teile gehören zu einer Baugruppe (G). Die Baugruppe ist nur komplett auszutauschen.
The parts marked with * belong to a subassembly (G). The subassemblymust be replaced complete.

A. Friedr.Flender AG, D 46393 Bocholt,
Tel.+ 49(0)2871/92-0, Fax+ 49(0)2871/922596, http://www.flender.com

Datum Date	HOBBOLD, HEINRICH	2681
05.05.2006	Rev.:	

c	1	TROMMEL-BREMS BRAKE DRUM	180	19	7 N 5211295	650598
d	8	FED-Z TENSION SPRING	3.6X14.4X8.5	10	9 . 6045506	1259008
e	16	MUTTER-SKT HEXAGON NUT	M08X1	9	D 936	340381
	8	HEBEL LEVER	180	7	9 N 5211291	650590
	32	NIET-ROHR TUBULAR RIVET	C 5X15	6	D 7338 M5	351097
	4	REIBBELAG FRICTION LINING	180	5	ITB 2919	650591
	1	RING-AUSGL SPACER	4/4 180	4	7 N 5211568	1226385
	8	BLZN-ELASTAL ELASTAL - BOLT	180 RD 20	2	9 N 5211289	1226327
	1	NOCKENTEIL FB 180 CAM PART	180	1	7 N 5220399	.
	Menge No. off	Benennung Description	Kenndaten Data	Teil-Nr. Part No.	Zeichnungs-Nr. Drawing No.	Waren-Nr. Ident No.

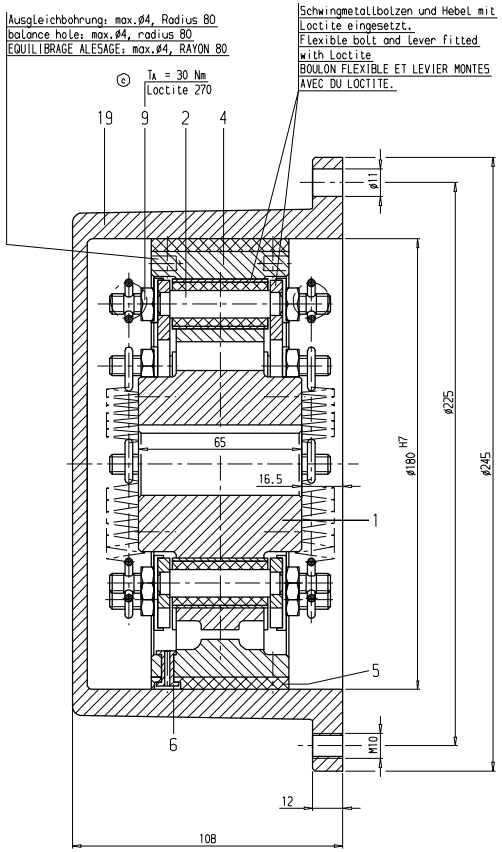

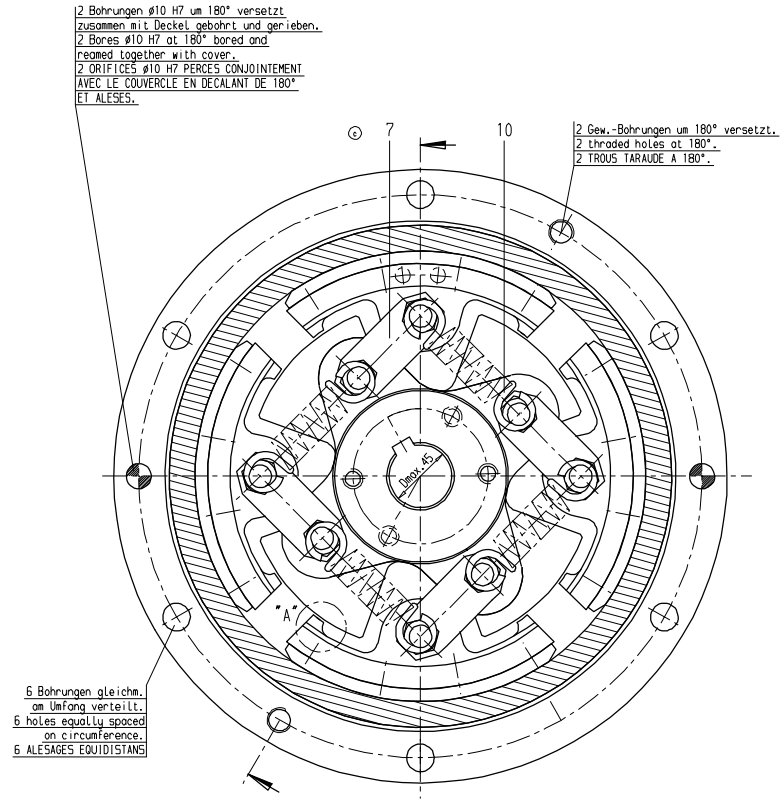

Achtung Montage !!!

Anwärmen der Nockenteile (1) (max.+50°C) erleichtert ggf.das Aufziehen
Bitte beachten Sie die Betriebsanleitung BA 3000 DE

b **Attention !!!**

Warming up the cam parts (1) (max.+50°C) might make the fitting easier.
Please read first the operating instructions BA 3000 EN

Bohrung D nach Auftrag
Diameter D to order
ALESAGE D SELON COMANDE
AGUJERO DE FIJACION SEGUN PEDIDE

Nut nach DIN 6885-1
Chavetero segun DIN 6885-1
Keyway acc. to DIN 6885-1
RAINURE SELON DIN 6885-1

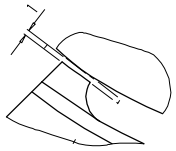

EINZELHEIT "A"
DETAIL

Bei Montage, vor dem Festziehen der Muttern Teil-Nr.9 Zwischen den Auflageflächen der Teile Nr.1 und 4 1 mm dicke Blechstreifen Legen und diese nach dem Festziehen wieder entfernen. Federn Teil-Nr.10 beim Einhängen nicht Überdehnen.

Place plate strip of 1 mm thickness between the faces of parts 1 and 4 tighten nuts parts 9 and remove plate strips afterwords. Take care not to strech springs part 10 unduly when fitting them.

ATTENTION FONCTIONNEMENT!
PLACER UN MORCEAU DE TOLE DE 1MM D'EPAISSEUR ENTRE LES PORTEES DES PIECES NO. 1 ET NO 4 LORS DU MONTAGE ET AVANT DESSERRER LES ECROUS NO 9 ET LA RETIRER APRES LE SERRAGE. NE PAS EXCESSIVEMENT ALLONGER LES RESSORTS NO 10 LORS DE L'ACCROCHAGE!

Bremsrichtung entgegen der Betriebsrichtung
Direction of braking opposite direction of rotation
LE SENS DE ROTATION AU FREINAGE EST A L'INVERS DU SENS DE ROTATION EN FONCTIONNEMENT

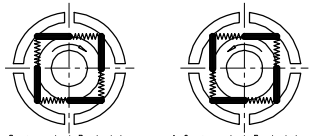

Aufsetzen bei Drehrichung rechts 1)
brake mounting for clockwise rotation 1)
MONTAGE EN CAS DE SENS DE ROTATION HORAIRE 1)

Aufsetzen bei Drehrichung links 1)
brake mounting for counter clockwiese ratation 1)
MONTAGE EN CAS DE SENS DE ROTATION ANTI-HORAIRE 1)

1) Auf den Wellenspiegel der Welle gesehen auf der die Bremse aufgesetzt wird
1) Viewed in direction of end face of soft on which brake is to be mounted
1) EN VUE SUR LA FACE DE L'ARBRE SUR LEQUEL LE FREIN EST MONTE.

Leerlaufdrehzahl n = 1500 1/min
Idling speed
VITESSE DE ROTATION A VIDE

f	.	Wuchtstempel korrigiert	2004-06-04	DFJ	.	2004-06-04
e	H4, B12	E-Liste korrigiert, Wuchtstempel geändert	2004-02-12	VIN	VIN	2004-02-12
d	H4	Ersatzteilliste richtiggestellt	2003-01-10	KHM	HEG	2003-01-10
c	3xc	Teil 8 entfernt, Text TA = 30Nm, Loctite 270 und E-Liste hinzu	2001-08-17	KHM	HEG	2001-09-11
b	E3	Stempel hinzu	2001-04-24	TBG	HEG	2001-04-24
a	.	Zeichnung Überarbeitet	2001-04-17	TBG	HEG	2001-04-17
Äl	Feld	Änderungsbeschreibung	Datum	Name		23. 3.93

Zul. Abweichungen für Maße ohne Tol.-Angaben: mittel DIN 7168 | Auftr.-Nr. . | gesichert

FLENDER

Werkstoff /-Nr. .

Benennung Schl.-Nr.: 0674
BREMS-FLIEHKRAFT
FB 180-1 ohne WDR / n = 1500 1/min

Gez.	KSA	16.03.93	ROSS
Gepr.	KSA	16.03.93	VOECKING
Norm	KSA	16.03.93	VOECKING
	Abt.	Datum	Name

Nicht gekennzeichnete Oberflächen: .
Rauhwerte Ra in µm
Rohteil nach Zeichnung . | sonst nach Zeichnung .

Maßstab 1:1
Trägheitsmoment J (kgm²) .
Gewicht (kg) 17

Format Art Zeichnungs-Nr Äl
6 . 5 273 774 f
Ersatz für | Aus Zchng. 5 240 171

Basis-Nr. Äl Modell-Nr. Ä Anz. Teil

Die Auswuchtdrehzahl darf 1100 1/min nicht überschreiten. Innenteile (Teile 1-10) zusammengebaut. Auswuchtüte Q6.3 ; zul. Restunwucht je Ebene 1.4 g. Vor dem Nuten gewuchtet.

El numero de revoluciones equilibrado, no debe sobrepasar los 1100 1/min. Piezas interiores (1-10) montados. Nivel de La calidad equilibrado Q6.3 ; desequilibrado residual admisible en cada plano 1.4 g. Equilibrado antes de realizar el chavetero.

Balancing speed may not exceed 1100 1/min. Internal parts (part-no. 1-10) balancing after assembly. Balancing quality Q6.3 ; allowable out of balance weight 1.4 g. Keyway is to be cut after balancing.

Toleranzen nach Werk ISO 16016 beachten
PLOTT-DATUM: 05-MAY-2006 13:07:27 Fr.Tiebing/PZ6

FLENDER	**Stückliste (SL)** Parts list	**Bauart** **FB** Type **Größe** **180,0** Size **Übersetzung** ratio	**Seite** Page 1/1

Bei Korrespondenz bitte angeben
Please quote in correspondence **SL 4190294-280 DE/EN**

Hierzu gehört Zeichnungs-Nr.
Please refer to DWG No. **5273774**

	Teil-Nr. Part No.	Menge No. off		Benennung Description	Zeichnungs-Nr. Drawings No.	Material-Nr. Ident no.	Gw(kg) Weight
E	0001	1	ST	FB NOCKENTEIL VARI FB CAM PART VARI		000.009.900.192	
E*	0001	1	ST	NOCKENTEIL FB180 UNGEBOHRT EN-JS1030 CAM PART FB180 UNGEBOHRT EN-JS1030	5220399/I	000.001.226.326	2,8
E	0002	8	ST	BLZN-ELASTAL FB180 RD20 115CrV3 ELASTAL-BOLT FB180 RD20 115CrV3	*****	000.001.226.327	0,1
G	0004	1	ST	RING-AUSGL 4/4 FB180 EN-JL1040 SPACER 4/4 FB180 EN-JL1040	5211568/H	000.001.226.385	2,1
E	0005	4	ST	REIBBELAG FB 180 5022 SH FRICTION LINING FB 180 5022 SH		000.000.650.591	0,0
E	0006	32	ST	NIET-ROHR C 5X15 D 7338 MS TUBULAR RIVET C 5X15 D 7338 MS		000.000.351.097	0,1
E	0007	8	ST	HEBEL FB 180 S235JRG2C LEVER FB 180 S235JRG2C	5211291/F	000.000.650.590	0,1
E	0009	16	ST	MUTTER-SKT M08X1 D 936 22H HEXAGON NUT M08X1 D 936 22H		000.000.340.381	0,1
E	0010	8	ST	FED-Z 3,6X14,4x8,5 1.4310 TENSION SPRING 3,6X14,4x8,5 1.4310	6045506/-	000.001.259.008	37,0

Die mit * gekennzeichneten Teile gehören zu einer Baugruppe (G). Die Baugruppe ist nur komplett auszutauschen.
The parts marked with * belong to a subassembly (G). The subassemblymust be replaced complete.

A. Friedr.Flender AG, D 46393 Bocholt,
Tel.+ 49(0)2871/92-0, Fax+ 49(0)2871/922596, http://www.flender.com

Datum Date	TIEBING, STEFANIE	2691
09.05.2006	Rev.:	

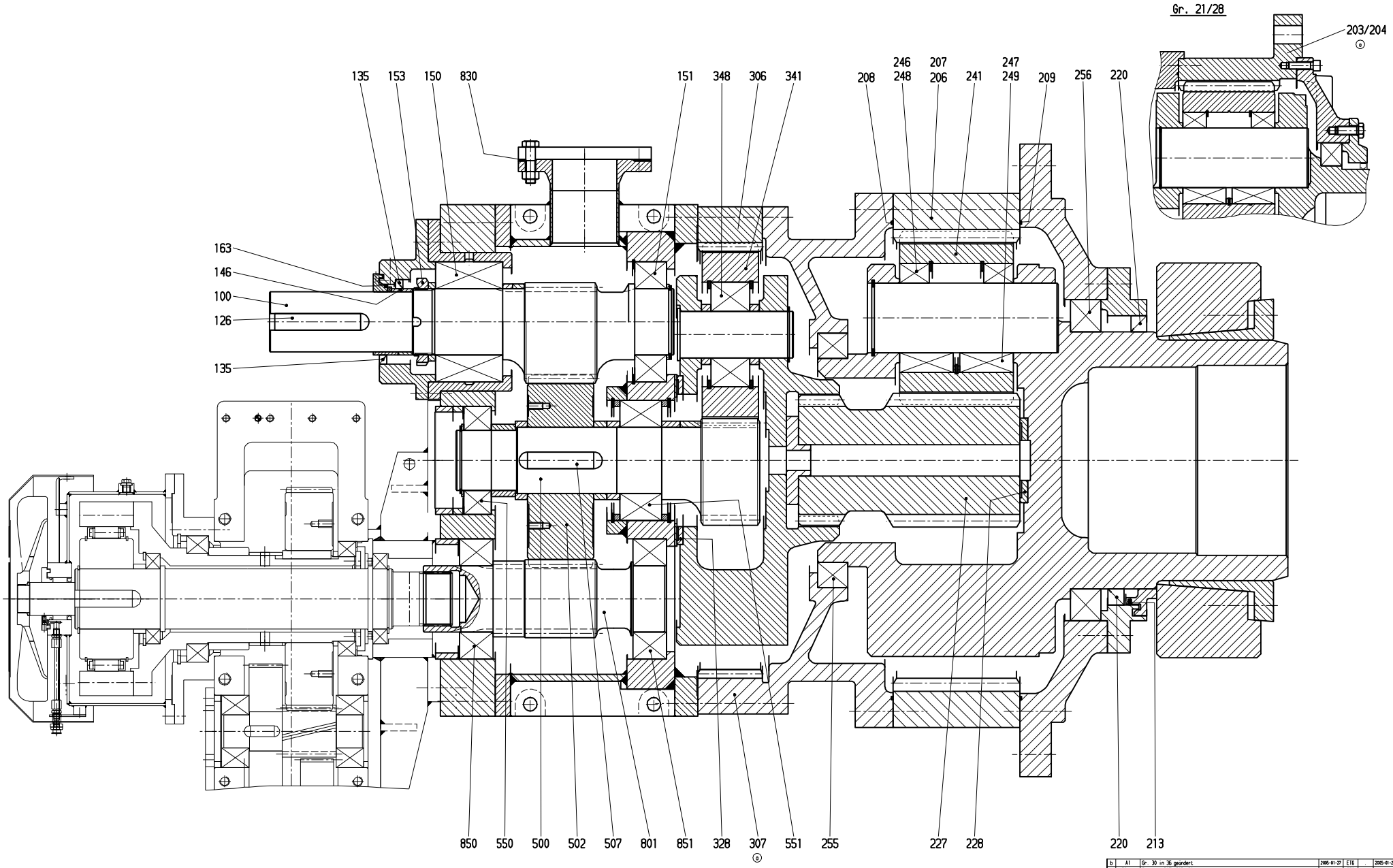

Teile nach Ersatzteilliste je nach Ausführung

Parts acc. to spare parts list depending on design

b	A1	Gr. 30 in 36 geändert	2005-01-27	ET6	2005-01-27
a	BB/MI	Teil-Nr. 307, 203, 204 hinzu	2002-09-10	ST6	2002-09-12
f	Feld	Änderungsbeschreibung	Datum	Name	Norm 2000-08-30

Zul. Abweichungen für Maße ohne Tol.-Angaben: mittel DIN 7168 — Auftr.-Nr. — geschärft

FLENDER

Nicht gekennzeichnete Oberflächen: Rauhwerte Ra in µm

Gez	EKD	2000-08-25	Linde
Gepr.	EKD	2000-08-28	Vahlbrock
Norm	NDR	2000-08-28	Lueer
Abt.	Datum		Name

Maßstab - Gewicht (kg)

Trägheitsmoment J (kgm²)

Basis-Nr. / Modell-Nr. — Ä1 / Anz. — Teil

Maße in mm

Werkstoff / -Nr.

Benennung: ERSATZTEIL-ZCHNG

Schl.-Nr.: 0110

P25A Gr. 21 - 36 / K UF Gr. 5 - 8

Rohteil nach Zeichnung — sonst nach Zeichnung

Format Art Zeichnungs-Nr. A1: 5 | 8 898 116 | b

Ersatz für — Aus Zchng. 5 867 733

Schutzvermerk ISO 16016 beachten

PLOTT-DATUM: 05-MAY-2006 16:36:15 H. Raschig/MDZ

/AB/EL/KS/AN/UX

119/428

FLENDER	**Ersatzteilliste (EL)** Spare parts list	**Bauart** Type **P2DA** **Größe** Size **23,0** **Übersetzung** ratio **82,781**	**Seite** Page 1/2

Bei Korrespondenz bitte angeben
Please quote in correspondence **EL 4190294-080 DE/EN**

Hierzu gehört Zeichnungs-Nr.
Please refer to DWG No. **8898116**

	Teil-Nr. Part No.	Menge No. off		Benennung Description		Zeichnungs-Nr. Drawings No.	Material-Nr. Ident no.	Gw(kg) Weight
E	0100	1	ST	STRDWELLE RP 265,0/2,27	1.6587	5867954/-	000.001.254.583	80,0
				PINION SHAFT RP 265,0/2,27 1.6587				
E	0135	1	ST	WDR 130X160X15 BAUM W 5710 75FPM585			000.000.781.850	0,2
				SHAFT SEAL 130X160X15 BAUM W 5710				
E	0146	1	ST	RING 120,0X130,0X041,5W	34CrNiMo6	5867054/E	000.000.626.178	0,6
				RING 120,0X130,0X041,5W 34CrNiMo6				
E	0150	1	ST	EINBAUS 32226/DF	ST-KAEF		000.000.379.980	24,4
				PAIRED TAPER ROLLER BEARINGS 32226/DF				
E	0151	1	ST	WAELZL 2222 NU EC D 5412 SKF/FAG			000.000.379.912	6,7
				ROLLING CONTACT BEARING 2222 NU EC D 541				
E	0163	3	ST	RING,AS 160/06,0X1,5 W 5730 FED-ST			000.000.347.212	0,0
				LAMELLAR RING, AS (FEY) 160/06,0X1,5 W 5				
E	0206	1	ST	STIRNRAD,INVERZ P2 23	34CrNiMo6	5867715/E	000.001.288.546	353,0
				INTERN.TOOTHED GEAR WHEEL P2 23				
E	0208	3,00	M	SCHNUR-RD 04,0 72NBR872			000.000.307.199	0,1
				ROUND CORD 04,0	72NBR872			
E	0209	3,00	M	SCHNUR-RD 04,0 72NBR872			000.000.307.199	0,1
				ROUND CORD 04,0	72NBR872			
E	0213	3	ST	RING,AS 500/12,0X2,5 W 5730 FED-ST			000.000.347.005	0,4
				LAMELLAR RING, AS (FEY) 500/12,0X2,5 W 5				
E	0220	1	ST	WDR 460X500X20 C D 3760 72NBR902			000.000.770.403	1,2
				SHAFT SEAL 460X500X20 C D 3760 72NBR902				
E	0227	1	ST	STIRD-PLA GP 272,4/1,76	1.6587	5867004/K	000.001.254.585	88,5
				PLANET PINION GP 272,4/1,76 1.6587				
E	0228	1	ST	RING-ANLAUF 065X160X10	PTFE/25C	5867035/A	000.000.626.157	0,3
				TIE PIECE 065X160X10 PTFE/25C				
E	0241	3	ST	STIRD-PLA GP 272,4/1,76	1.6587	5867005/I	000.001.254.588	91,0
E	0249	6	ST	WAELZL185030 SL C3 2S			000.000.379.902	13,3
				ROLLING CONTACT BEARING185030 SL C3 2S				
E	0255	1	ST	WAELZL181872 SL			000.000.379.268	11,7
				ROLLING CONTACT BEARING181872 SL				
E	0256	1	ST	WAELZL181896 SL			000.000.380.873	35,2
				ROLLING CONTACT BEARING181896 SL				
E	0306	1	ST	STIRNRAD,INVERZ PN 23	34CrNiMo6	5867033/H	000.000.807.254	131,0
				INTERN.TOOTHED GEAR WHEEL PN 23				
E	0328	1	ST	RING-ANLAUF 255X315X10	PTFE/25C	5867048/B	000.000.626.164	0,4
				TIE PIECE 255X315X10 PTFE/25C				
E	0341	3	ST	STIRD-PLA GP 231,5/2,20	1.6587	5867024/A	000.001.260.263	32,8
				PLANET PINION GP 231,5/2,20 1.658				
E	0348	3	ST	WAELZL 22320 E/C3 D 635 SKF			000.000.380.341	13,0
				ROLLING CONTACT BEARING 22320 E/C3 D 635				
E	0500	1	ST	STRDW-PLA GP 231,5/2,20	1.6587	5867963/B	000.001.260.265	53,0
				PLANETARY CYLINDRICAL WHEEL SHAFT GP 231				
E	0502	1	ST	STIRNRAD LP 265,0/2,27	1.6587	5867955/A	000.001.254.634	88,8
				GEAR WHEEL LP 265,0/2,27 1.6587				

Die mit * gekennzeichneten Teile gehören zu einer Baugruppe (G). Die Baugruppe ist nur komplett auszutauschen.
The parts marked with * belong to a subassembly (G). The subassemblymust be replaced complete.

FLENDER	**Ersatzteilliste (EL)** Spare parts list	**Bauart** Type **P2DA** **Größe** Size **23,0** **Übersetzung** ratio **82,781**	**Seite** Page 2/2

Bei Korrespondenz bitte angeben
Please quote in correspondence **EL 4190294-080 DE/EN**

Hierzu gehört Zeichnungs-Nr.
Please refer to DWG No. **8898116**

	Teil-Nr. Part No.	Menge No. off		Benennung Description	Zeichnungs-Nr. Drawings No.	Material-Nr. Ident no.	Gw(kg) Weight
E	0550	1	ST	WAELZL 2222 NU EC D 5412 SKF/FAG ROLLING CONTACT BEARING 2222 NU EC D 541		000.000.379.912	6,7
E	0551	1	ST	WAELZL 23224 CC/W33 D 635 MET-KAEF ROLLING CONTACT BEARING 23224 CC/W33 D 6		000.000.380.135	12,3
E	0801	1	ST	STRDWELLE RP 265,0/2,27 1.6587 PINION SHAFT RP 265,0/2,27 1.6587	6041985/A	000.001.254.827	48,2
E	0850	1	ST	WAELZL 32224 D 720 ST-KAEF ROLLING CONTACT BEARING 32224 D 720		000.000.380.754	9,0
E	0851	1	ST	WAELZL 32224 D 720 ST-KAEF ROLLING CONTACT BEARING 32224 D 720		000.000.380.754	9,0

A. Friedr.Flender AG, D 46393 Bocholt,
Tel.+ 49(0)2871/92-0, Fax+ 49(0)2871/922596, http://www.flender.com

Datum Date	HOBBOLD, HEINRICH	2681
05.05.2006	Rev.:	

FLENDER	**Ersatzteilliste (EL)** Spare parts list	**Bauart** Type **Größe** Size **Übersetzung** ratio	**Seite** Page 1/1

Bei Korrespondenz bitte angeben
Please quote in correspondence

EL 4190294-100 DE/EN

Hierzu gehört Zeichnungs-Nr.
Please refer to DWG No.

	Teil-Nr. Part No.	Menge No. off		Benennung Description	Zeichnungs-Nr. Drawings No.	Material-Nr. Ident no.	Gw(kg) Weight
E	0610	2	ST	LAGER-GEL GE120 UK-2RS BALL AND SOCKET JOINT GE120 UK-2RS		000.000.389.180	8,0
E	0611	4	ST	LAGER-GEL GE 90 UK-2RS BALL AND SOCKET JOINT GE 90 UK-2RS		000.000.389.178	2,7
E	0612	2	ST	DICHTUNG CD120 CELLASTO SEAL CD120 CELLASTO		000.000.625.296	0,1
E	0613	8	ST	DICHTUNG CD090 CELLASTO SEAL CD090 CELLASTO		000.000.625.269	0,1

Die mit * gekennzeichneten Teile gehören zu einer Baugruppe (G). Die Baugruppe ist nur komplett auszutauschen.
The parts marked with * belong to a subassembly (G). The subassemblymust be replaced complete.

A. Friedr.Flender AG, D 46393 Bocholt,
Tel.+ 49(0)2871/92-0, Fax+ 49(0)2871/922596, http://www.flender.com

Datum Date	HOBBOLD, HEINRICH	2681
05.05.2006	Rev.:	

FLENDER	**Ersatzteilliste (EL)** Spare parts list	**Bauart** Type **P2DA** **Größe** Size **23,0** **Übersetzung** ratio **82,781**	**Seite** Page 1/2

Bei Korrespondenz bitte angeben
Please quote in correspondence **EL 4190294-120 DE/EN**

Hierzu gehört Zeichnungs-Nr.
Please refer to DWG No. **8898116**

	Teil-Nr. Part No.	Menge No. off		Benennung Description		Zeichnungs-Nr. Drawings No.	Material-Nr. Ident no.	Gw(kg) Weight
E	0100	1	ST	STRDWELLE RP 265,0/2,27	1.6587	5867954/-	000.001.254.583	80,0
				PINION SHAFT RP 265,0/2,27 1.6587				
E	0135	1	ST	WDR 130X160X15 BAUM W 5710 75FPM585			000.000.781.850	0,2
				SHAFT SEAL 130X160X15 BAUM W 5710				
E	0146	1	ST	RING 120,0X130,0X041,5W	34CrNiMo6	5867054/E	000.000.626.178	0,6
				RING 120,0X130,0X041,5W 34CrNiMo6				
E	0150	1	ST	EINBAUS 32226/DF	ST-KAEF		000.000.379.980	24,4
				PAIRED TAPER ROLLER BEARINGS 32226/DF				
E	0151	1	ST	WAELZL 2222 NU EC D 5412 SKF/FAG			000.000.379.912	6,7
				ROLLING CONTACT BEARING 2222 NU EC D 541				
E	0163	3	ST	RING,AS 160/06,0X1,5 W 5730 FED-ST			000.000.347.212	0,0
				LAMELLAR RING, AS (FEY) 160/06,0X1,5 W 5				
E	0206	1	ST	STIRNRAD,INVERZ P2 23	34CrNiMo6	5867715/E	000.001.288.546	353,0
				INTERN.TOOTHED GEAR WHEEL P2 23				
E	0208	3,00	M	SCHNUR-RD 04,0 72NBR872			000.000.307.199	0,1
				ROUND CORD 04,0	72NBR872			
E	0209	3,00	M	SCHNUR-RD 04,0 72NBR872			000.000.307.199	0,1
				ROUND CORD 04,0	72NBR872			
E	0213	3	ST	RING,AS 500/12,0X2,5 W 5730 FED-ST			000.000.347.005	0,4
				LAMELLAR RING, AS (FEY) 500/12,0X2,5 W 5				
E	0220	1	ST	WDR 460X500X20 C D 3760 72NBR902			000.000.770.403	1,2
				SHAFT SEAL 460X500X20 C D 3760 72NBR902				
E	0227	1	ST	STIRD-PLA GP 272,4/1,76	1.6587	5867004/K	000.001.254.585	88,5
				PLANET PINION GP 272,4/1,76 1.6587				
E	0228	1	ST	RING-ANLAUF 065X160X10	PTFE/25C	5867035/A	000.000.626.157	0,3
				TIE PIECE 065X160X10 PTFE/25C				
E	0241	3	ST	STIRD-PLA GP 272,4/1,76	1.6587	5867005/I	000.001.254.588	91,0
E	0249	6	ST	WAELZL185030 SL C3 2S			000.000.379.902	13,3
				ROLLING CONTACT BEARING185030 SL C3 2S				
E	0255	1	ST	WAELZL181872 SL			000.000.379.268	11,7
				ROLLING CONTACT BEARING181872 SL				
E	0256	1	ST	WAELZL181896 SL			000.000.380.873	35,2
				ROLLING CONTACT BEARING181896 SL				
E	0306	1	ST	STIRNRAD,INVERZ PN 23	34CrNiMo6	5867033/H	000.000.807.254	131,0
				INTERN.TOOTHED GEAR WHEEL PN 23				
E	0328	1	ST	RING-ANLAUF 255X315X10	PTFE/25C	5867048/B	000.000.626.164	0,4
				TIE PIECE 255X315X10 PTFE/25C				
E	0341	3	ST	STIRD-PLA GP 231,5/2,20	1.6587	5867024/A	000.001.260.263	32,8
				PLANET PINION GP 231,5/2,20 1.658				
E	0348	3	ST	WAELZL 22320 E/C3 D 635 SKF			000.000.380.341	13,0
				ROLLING CONTACT BEARING 22320 E/C3 D 635				
E	0500	1	ST	STRDW-PLA GP 231,5/2,20	1.6587	5867963/B	000.001.260.265	53,0
				PLANETARY CYLINDRICAL WHEEL SHAFT GP 231				
E	0502	1	ST	STIRNRAD LP 265,0/2,27	1.6587	5867955/A	000.001.254.634	88,8
				GEAR WHEEL LP 265,0/2,27 1.6587				

Die mit * gekennzeichneten Teile gehören zu einer Baugruppe (G). Die Baugruppe ist nur komplett auszutauschen.
The parts marked with * belong to a subassembly (G). The subassemblymust be replaced complete.

FLENDER	**Ersatzteilliste (EL)** Spare parts list	**Bauart** Type **P2DA** **Größe** Size **23,0** **Übersetzung** ratio **82,781**	**Seite** Page 2/2

Bei Korrespondenz bitte angeben
Please quote in correspondence **EL 4190294-120 DE/EN**

Hierzu gehört Zeichnungs-Nr.
Please refer to DWG No. **8898116**

	Teil-Nr. Part No.	Menge No. off		Benennung Description	Zeichnungs-Nr. Drawings No.	Material-Nr. Ident no.	Gw(kg) Weight
E	0550	1	ST	WAELZL 2222 NU EC D 5412 SKF/FAG ROLLING CONTACT BEARING 2222 NU EC D 541		000.000.379.912	6,7
E	0551	1	ST	WAELZL 23224 CC/W33 D 635 MET-KAEF ROLLING CONTACT BEARING 23224 CC/W33 D 6		000.000.380.135	12,3
E	0801	1	ST	STRDWELLE RP 265,0/2,27 1.6587 PINION SHAFT RP 265,0/2,27 1.6587	6041985/A	000.001.254.827	48,2
E	0850	1	ST	WAELZL 32224 D 720 ST-KAEF ROLLING CONTACT BEARING 32224 D 720		000.000.380.754	9,0
E	0851	1	ST	WAELZL 32224 D 720 ST-KAEF ROLLING CONTACT BEARING 32224 D 720		000.000.380.754	9,0

A. Friedr.Flender AG, D 46393 Bocholt,
Tel.+ 49(0)2871/92-0, Fax+ 49(0)2871/922596, http://www.flender.com

Datum Date	HOBBOLD, HEINRICH	2681
05.05.2006	Rev.:	

FLENDER	**Ersatzteilliste (EL)** Spare parts list	**Bauart** Type **Größe** Size **Übersetzung** ratio	**Seite** Page 1/1

Bei Korrespondenz bitte angeben
Please quote in correspondence

EL 4190294-140 DE/EN

Hierzu gehört Zeichnungs-Nr.
Please refer to DWG No.

	Teil-Nr. Part No.	Menge No. off		Benennung Description	Zeichnungs-Nr. Drawings No.	Material-Nr. Ident no.	Gw(kg) Weight
E	0610	2	ST	LAGER-GEL GE120 UK-2RS BALL AND SOCKET JOINT GE120 UK-2RS		000.000.389.180	8,0
E	0611	4	ST	LAGER-GEL GE 90 UK-2RS BALL AND SOCKET JOINT GE 90 UK-2RS		000.000.389.178	2,7
E	0612	2	ST	DICHTUNG CD120 CELLASTO SEAL CD120 CELLASTO		000.000.625.296	0,1
E	0613	8	ST	DICHTUNG CD090 CELLASTO SEAL CD090 CELLASTO		000.000.625.269	0,1

Die mit * gekennzeichneten Teile gehören zu einer Baugruppe (G). Die Baugruppe ist nur komplett auszutauschen.
The parts marked with * belong to a subassembly (G). The subassemblymust be replaced complete.

A. Friedr.Flender AG, D 46393 Bocholt,
Tel.+ 49(0)2871/92-0, Fax+ 49(0)2871/922596, http://www.flender.com

Datum Date	HOBBOLD, HEINRICH	2681
05.05.2006	Rev.:	

c	1	TROMMEL-BREMS BRAKE DRUM	180	19	7 N 5211295	650598
d	8	FED-Z TENSION SPRING	3.6X14.4X8.5	10	9 . 6045506	1259008
e	16	MUTTER-SKT HEXAGON NUT	M08X1	9	D 936	340381
	8	HEBEL LEVER	180	7	9 N 5211291	650590
	32	NIET-ROHR TUBULAR RIVET	C 5X15	6	D 7338 M5	351097
	4	REIBBELAG FRICTION LINING	180	5	ITB 2919	650591
	1	RING-AUSGL SPACER	4/4 180	4	7 N 5211568	1226385
	8	BLZN-ELASTAL ELASTAL - BOLT	180 RD 20	2	9 N 5211289	1226327
	1	NOCKENTEIL FB 180 CAM PART	180	1	7 N 5220399	.
	Menge No. off	Benennung Description	Kenndaten Data	Teil-Nr. Part No.	Zeichnungs-Nr. Drawing No.	Waren-Nr. Ident No.

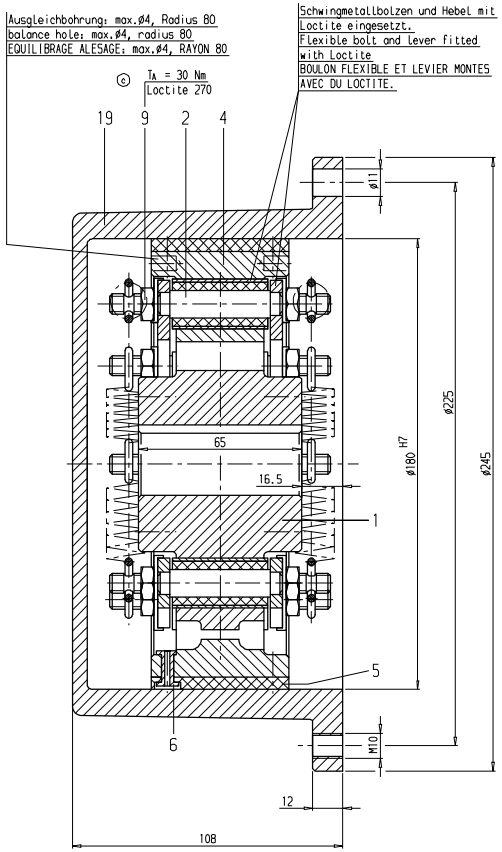

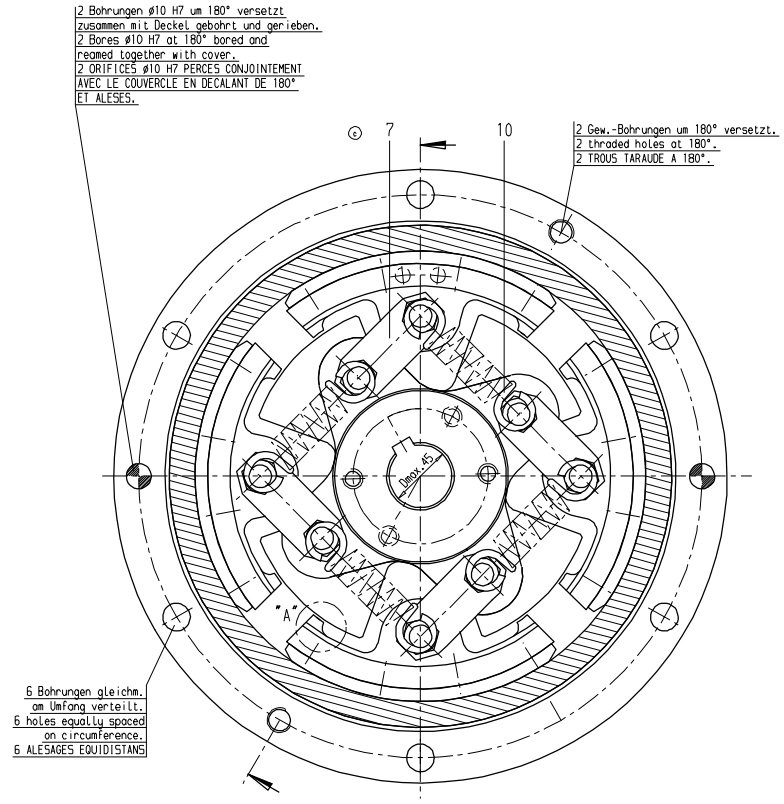

Achtung Montage !!!

Anwärmen der Nockenteile (1) (max.+50°C) erleichtert ggf.das Aufziehen
Bitte beachten Sie die Betriebsanleitung BA 3000 DE

b **Attention !!!**

Warming up the cam parts (1) (max.+50°C) might make the fitting easier.
Please read first the operating instructions BA 3000 EN

Bohrung D nach Auftrag
Diameter D to order
ALESAGE D SELON COMANDE
AGUJERO DE FIJACION SEGUN PEDIDE

Nut nach DIN 6885-1
Chavetero segun DIN 6885-1
Keyway acc. to DIN 6885-1
RAINURE SELON DIN 6885-1

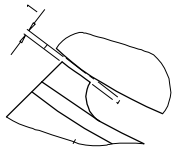

EINZELHEIT "A"
DETAIL

Bei Montage, vor dem Festziehen der Muttern Teil-Nr.9 Zwischen den Auflageflächen der Teile Nr.1 und 4 1 mm dicke Blechstreifen Legen und diese nach dem Festziehen wieder entfernen. Federn Teil-Nr.10 beim Einhängen nicht Überdehnen.

Place plate strip of 1 mm thickness between the faces of parts 1 and 4 tighten nuts parts 9 and remove plate strips afterwords. Take care not to strech springs part 10 unduly when fitting them.

ATTENTION FONCTIONNEMENT!
PLACER UN MORCEAU DE TOLE DE 1MM D'EPAISSEUR ENTRE LES PORTEES DES PIECES NO. 1 ET NO 4 LORS DU MONTAGE ET AVANT DESSERRER LES ECROUS NO 9 ET LA RETIRER APRES LE SERRAGE. NE PAS EXCESSIVEMENT ALLONGER LES RESSORTS NO 10 LORS DE L'ACCROCHAGE!

Bremsrichtung entgegen der Betriebsrichtung
Direction of braking opposite direction of rotation
LE SENS DE ROTATION AU FREINAGE EST A L'INVERS DU SENS DE ROTATION EN FONCTIONNEMENT

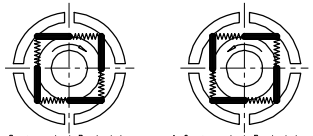

Aufsetzen bei Drehrichung rechts 1)
brake mounting for clockwise rotation 1)
MONTAGE EN CAS DE SENS DE ROTATION HORAIRE 1)

Aufsetzen bei Drehrichung links 1)
brake mounting for counter clockwiese ratation 1)
MONTAGE EN CAS DE SENS DE ROTATION ANTI-HORAIRE 1)

1) Auf den Wellenspiegel der Welle gesehen auf der die Bremse aufgesetzt wird
1) Viewed in direction of end face of soft on which brake is to be mounted
1) EN VUE SUR LA FACE DE L'ARBRE SUR LEQUEL LE FREIN EST MONTE.

Leerlaufdrehzahl n = 1500 1/min
Idling speed
VITESSE DE ROTATION A VIDE

f	.	Wuchtstempel korrigiert	2004-06-04	DFJ	.	2004-06-04
e	H4, B12	E-Liste korrigiert, Wuchtstempel geändert	2004-02-12	VIN	VIN	2004-02-12
d	H4	Ersatzteilliste richtiggestellt	2003-01-10	KHM	HEG	2003-01-10
c	3xc	Teil 8 entfernt, Text TA = 30Nm, Loctite 270 und E-Liste hinzu	2001-08-17	KHM	HEG	2001-09-11
b	E3	Stempel hinzu	2001-04-24	TBG	HEG	2001-04-24
a	.	Zeichnung Überarbeitet	2001-04-17	TBG	HEG	2001-04-17
Äl	Feld	Änderungsbeschreibung	Datum	Name		23. 3.93

Zul. Abweichungen für Maße ohne Tol.-Angaben: mittel DIN 7168 | Auftr.-Nr. . | gesichert

FLENDER

Werkstoff /-Nr. .

Benennung Schl.-Nr.: 0674
BREMS-FLIEHKRAFT
FB 180-1 ohne WDR / n = 1500 1/min

Gez.	KSA	16.03.93	ROSS
Gepr.	KSA	16.03.93	VOECKING
Norm	KSA	16.03.93	VOECKING
	Abt.	Datum	Name

Nicht gekennzeichnete Oberflächen: .
Rauhwerte Ra in µm
Rohteil nach Zeichnung . | sonst nach Zeichnung .

Maßstab 1:1
Trägheitsmoment J (kgm²) .
Gewicht (kg) 17

Format Art Zeichnungs-Nr Äl
6 . 5 273 774 f
Ersatz für | Aus Zchng. 5 240 171

Basis-Nr. Äl Modell-Nr. Ä Anz. Teil

Die Auswuchtdrehzahl darf 1100 1/min nicht überschreiten. Innenteile (Teile 1-10) zusammengebaut. Auswuchtüte Q6.3 ; zul. Restunwucht je Ebene 1.4 g. Vor dem Nuten gewuchtet.

El numero de revoluciones equilibrado, no debe sobrepasar los 1100 1/min. Piezas interiores (1-10) montados. Nivel de La calidad equilibrado Q6.3 ; desequilibrado residual admisible en cada plano 1.4 g. Equilibrado antes de realizar el chavetero.

Balancing speed may not exceed 1100 1/min. Internal parts (part-no. 1-10) balancing after assembly. Balancing quality Q6.3 ; allowable out of balance weight 1.4 g. Keyway is to be cut after balancing.

Toleranzen nach Werk ISO 16016 beachten
PLOTT-DATUM: 05-MAY-2006 13:07:27 Fr.Tiebing/PZ6

FLENDER	**Stückliste (SL)** Parts list	**Bauart** **FB** Type **Größe** **180,0** Size **Übersetzung** ratio	**Seite** Page 1/1

Bei Korrespondenz bitte angeben
Please quote in correspondence **SL 4190294-280 DE/EN**

Hierzu gehört Zeichnungs-Nr.
Please refer to DWG No. **5273774**

	Teil-Nr. Part No.	Menge No. off		Benennung Description	Zeichnungs-Nr. Drawings No.	Material-Nr. Ident no.	Gw(kg) Weight
E	0001	1	ST	FB NOCKENTEIL VARI FB CAM PART VARI		000.009.900.192	
E*	0001	1	ST	NOCKENTEIL FB180 UNGEBOHRT EN-JS1030 CAM PART FB180 UNGEBOHRT EN-JS1030	5220399/I	000.001.226.326	2,8
E	0002	8	ST	BLZN-ELASTAL FB180 RD20 115CrV3 ELASTAL-BOLT FB180 RD20 115CrV3	*****	000.001.226.327	0,1
G	0004	1	ST	RING-AUSGL 4/4 FB180 EN-JL1040 SPACER 4/4 FB180 EN-JL1040	5211568/H	000.001.226.385	2,1
E	0005	4	ST	REIBBELAG FB 180 5022 SH FRICTION LINING FB 180 5022 SH		000.000.650.591	0,0
E	0006	32	ST	NIET-ROHR C 5X15 D 7338 MS TUBULAR RIVET C 5X15 D 7338 MS		000.000.351.097	0,1
E	0007	8	ST	HEBEL FB 180 S235JRG2C LEVER FB 180 S235JRG2C	5211291/F	000.000.650.590	0,1
E	0009	16	ST	MUTTER-SKT M08X1 D 936 22H HEXAGON NUT M08X1 D 936 22H		000.000.340.381	0,1
E	0010	8	ST	FED-Z 3,6X14,4x8,5 1.4310 TENSION SPRING 3,6X14,4x8,5 1.4310	6045506/-	000.001.259.008	37,0

Die mit * gekennzeichneten Teile gehören zu einer Baugruppe (G). Die Baugruppe ist nur komplett auszutauschen.
The parts marked with * belong to a subassembly (G). The subassemblymust be replaced complete.

A. Friedr.Flender AG, D 46393 Bocholt,
Tel.+ 49(0)2871/92-0, Fax+ 49(0)2871/922596, http://www.flender.com

Datum Date	TIEBING, STEFANIE	2691
09.05.2006	Rev.:	

FLENDER	FLENDER – Zahnradgetriebe Gear unit Ersatzteilzeichnung/ Spare part drawing	Bauart / Type K3UF Größe / Size 5-8	Ausführung / Design H/G

Bei Korrespondenz bitte angeben / Please quote in correspondence | EZ

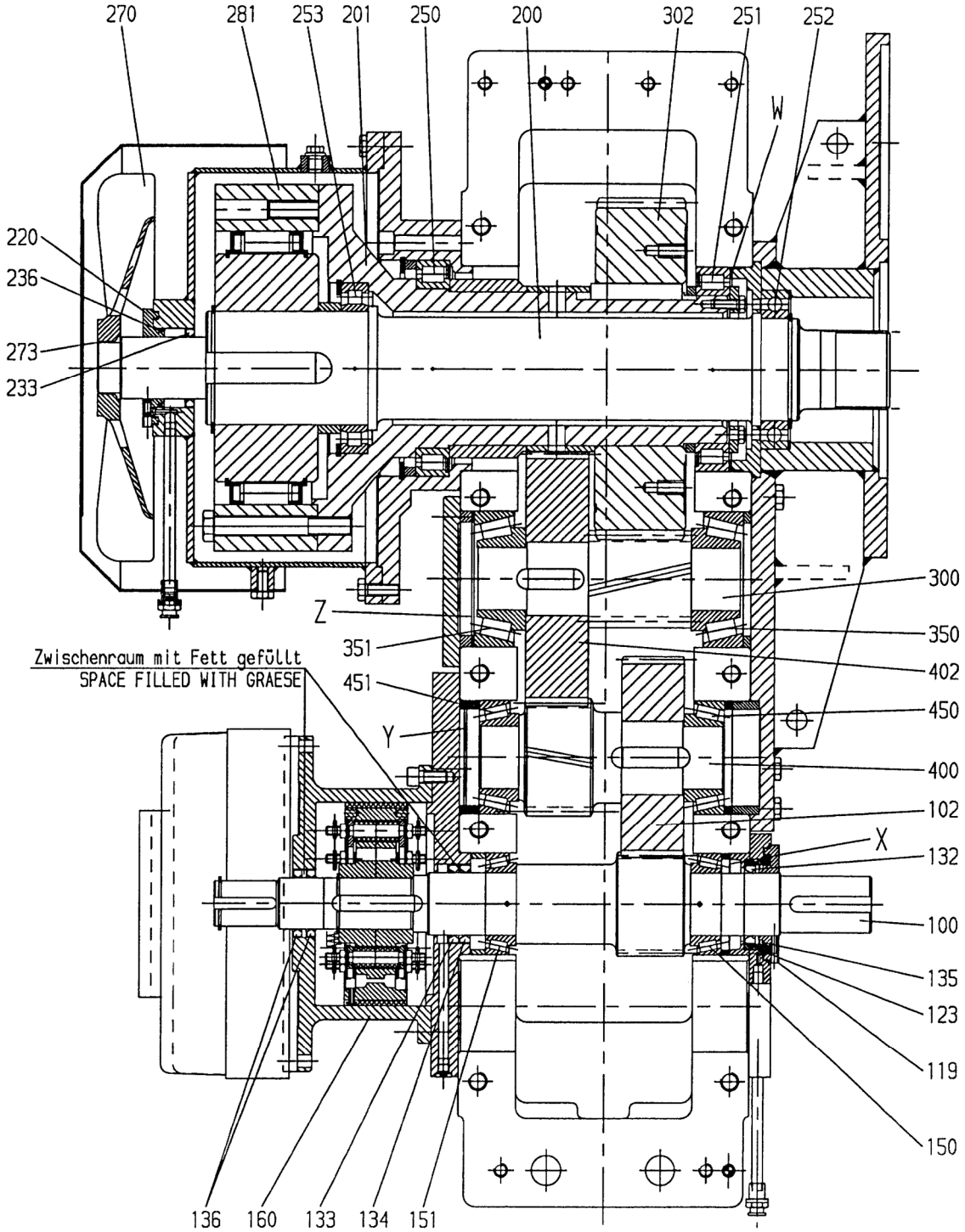

W,X,Y,Z = Paßscheibe / Shim

2005-08-02

FLENDER-Getriebewerk Penig GmbH, Thierbacher Str. 24, 09320 Penig, Tel. 037381/60, Telefax 0373816286	Datum / Date 2002-06-18	Name/Name Eichler	ZGE
		Y 6 008 616	a

Diese technische Unterlage hat gesetzlichen Schutz (DIN 34)

PLOTT-DATUM: 19-AUG-2005 12:49:06 H. Eichler, Martin/PZ8

FLENDER	Ersatzteilliste (EL) Spare parts list	Bauart K3UF Type Größe 6,0 Size Übersetzung 28,608 ratio	Seite Page 1/2

Bei Korrespondenz bitte angeben
Please quote in correspondence **EL 4190294-200 DE/EN**

Hierzu gehört Zeichnungs-Nr.
Please refer to DWG No. **6008616**

	Teil-Nr. Part No.	Menge No. off		Benennung Description	Zeichnungs-Nr. Drawings No.	Material-Nr. Ident no.	Gw(kg) Weight
E	0100	1	ST	STRDWELLE D79,03X577 1.6587 PINION SHAFT D79,03X577 1.6587	6046354/A	000.001.260.094	10,8
E	0102	1	ST	STIRNRAD R 130,0/2,54 1.6587 GEAR WHEEL R 130,0/2,54 1.6587	5880842/B	000.000.560.842	10,2
E	0119	1	ST	RINGTRAEGER D98/55X17 C45 Ring carrier	8761311/A	026.787.613.118	0,5
E	0123	2	ST	O-RING OR0074 -03 W 5713 72NBR872 O-RING OR0074 -03 W 5713 72NBR872		000.000.243.323	0,0
E	0132	1	ST	WDR 055X070X08 BAUMSL W 5710 75FPM585 SHAFT SEAL 055X070X08 BAUMSL W 5710		000.000.306.052	0,0
E	0133	1	ST	WDR 055X070X08 BAUMSL W 5710 75FPM585 SHAFT SEAL 055X070X08 BAUMSL W 5710		000.000.306.052	0,0
E	0134	1	ST	WDR 55X70X10 BAUM W5710 75FKM585 SHAFT SEAL 55X70X10 BAUM W5710 75FKM585		002.900.076.606	0,0
E	0135	3	ST	RING,AS 070/03,1X0,82 W 5730 FED-ST LAMELLAR RING, AS (FEY) 070/03,1X0,82 W		000.000.347.199	0,1
E	0136	2	ST	WDR 42X62X8 BAUM 75FPM585 SHAFT SEAL 42X62X8 BAUM 75FPM585		000.050.027.652	0,1
E	0150	1	ST	WAELZL 33011 D 720 ST-KAEF ROLLING CONTACT BEARING 33011 D 720		000.000.777.665	0,7
E	0151	1	ST	WAELZL 33011 D 720 ST-KAEF ROLLING CONTACT BEARING 33011 D 720		000.000.777.665	0,7
E	0160	1	ST	TROMMEL-BREMS K3UF5/6 - FB180 C45N80 Brake drum	8762258/-	027.987.622.588	12,6
E	0200	1	ST	WELLE D109X803 34CRNIMO6 K3/K4 06 SHAFT D109X803 34CRNIMO6 K3/K4 06		000.001.255.247	41,8
E	0201	1	ST	WELLE-FLANSCH 322X0372 C60+N FLANGED SHAFT 322X0372 C60+N	8895938/A	000.000.695.938	35,1
E	0220	1	ST	RINGTRAEGER055X104,0X19 C45 RING CARRIER055X104,0X19 C45	5877840/-	000.000.677.840	0,6
E	0233	1	ST	WDR 055X070X08 BAUMSL W 5710 75FPM585 SHAFT SEAL 055X070X08 BAUMSL W 5710		000.000.306.052	0,0
E	0236	3	ST	RING,AS 070/03,1X0,82 W 5730 FED-ST LAMELLAR RING, AS (FEY) 070/03,1X0,82 W		000.000.347.199	0,1
E	0250	1	ST	WAELZL182928 SL ROLLING CONTACT BEARING182928 SL		000.000.379.145	2,6
E	0251	1	ST	WAELZL 182930 SL ROLLING CONTACT BEARING 182930 SL		000.050.003.926	3,8
E	0252	1	ST	WAELZL 6020 D 625 MET-KAEF ROLLING CONTACT BEARING 6020 D 625		000.000.380.620	1,4
E	0253	1	ST	WAELZL 1020 NU MA/C3 D 5412 MS-KAEF ROLLING CONTACT BEARING 1020 NU MA/C3 D		000.000.380.428	2,0
E	0270	1	ST	LUEFTER 340/ 45 AC45000 FAN 340/ 45 AC45000	5882387/E	000.000.562.387	1,5
E	0273	1	ST	RING-TOL BN0820-045-02 W 3372 FED-ST DISTANCE RING BN0820-045-02 W 3372		000.000.346.005	0,0

Die mit * gekennzeichneten Teile gehören zu einer Baugruppe (G). Die Baugruppe ist nur komplett auszutauschen.
The parts marked with * belong to a subassembly (G). The subassemblymust be replaced complete.

A. Friedr.Flender AG, D 46393 Bocholt,
Tel. +49(0)2871/92-0, Fax +49(0)2871/922596, http://www.flender.com

Datum Date	EICHLER, MARTIN PE-387
19.08.2005	Rev.:

FLENDER	Ersatzteilliste (EL) Spare parts list	Bauart K3UF Type Größe 6,0 Size Übersetzung 28,608 ratio	Seite Page 2/2

Bei Korrespondenz bitte angeben
Please quote in correspondence **EL 4190294-200 DE/EN**

Hierzu gehört Zeichnungs-Nr.
Please refer to DWG No. **6008616**

	Teil-Nr. Part No.	Menge No. off		Benennung Description	Zeichnungs-Nr. Drawings No.	Material-Nr. Ident no.	Gw(kg) Weight
E	0281	1	ST	RS FXM 200- 63SX/H100 W 5813 ST BACKSTOP FXM 200- 63SX/H100 W 5813 ST		000.000.389.016	52,0
E	0300	1	ST	STRDWELLE R 185,0/3,94 1.6587 PINION SHAFT R 185,0/3,94 1.6587	5875775/A	000.000.675.775	6,3
E	0302	1	ST	STIRNRAD L 220,0/4,89 1.6587 GEAR WHEEL L 220,0/4,89 1.6587	5875752/B	000.000.675.752	54,4
E	0350	1	ST	WAELZL 32311 B D 720 ST-KAEF ROLLING CONTACT BEARING 32311 B D 720		000.000.380.564	2,5
E	0351	1	ST	WAELZL 32311 B D 720 ST-KAEF ROLLING CONTACT BEARING 32311 B D 720		000.000.380.564	2,5
E	0400	1	ST	STRDWELLE L 157,0/2,31 1.6587 PINION SHAFT L 157,0/2,31 1.6587	5886512/-	000.000.666.512	7,5
E	0402	1	ST	STIRNRAD R 157,0/2,31 1.6587 GEAR WHEEL R 157,0/2,31 1.6587	5886513/-	000.000.666.513	14,5
E	0450	1	ST	WAELZL 33211 D 720 ST-KAEF ROLLING CONTACT BEARING 33211 D 720		000.000.379.174	1,2
E	0451	1	ST	WAELZL 33211 D 720 ST-KAEF ROLLING CONTACT BEARING 33211 D 720		000.000.379.174	1,2

A. Friedr.Flender AG, D 46393 Bocholt,
Tel. +49(0)2871/92-0, Fax +49(0)2871/922596, http://www.flender.com

Datum Date	EICHLER, MARTIN PE-387
19.08.2005	Rev.:

FLENDER	Ersatzteilliste (EL) Spare parts list	Bauart K3UF Type Größe 6,0 Size Übersetzung 28,608 ratio	Seite Page 1/2

Bei Korrespondenz bitte angeben
Please quote in correspondence **EL 4190294-220 DE/EN**

Hierzu gehört Zeichnungs-Nr.
Please refer to DWG No. **6008616**

	Teil-Nr. Part No.	Menge No. off		Benennung Description	Zeichnungs-Nr. Drawings No.	Material-Nr. Ident no.	Gw(kg) Weight
E	0100	1	ST	STRDWELLE D79,03X577 1.6587 PINION SHAFT D79,03X577 1.6587	6046354/A	000.001.260.094	10,8
E	0102	1	ST	STIRNRAD R 130,0/2,54 1.6587 GEAR WHEEL R 130,0/2,54 1.6587	5880842/B	000.000.560.842	10,2
E	0119	1	ST	RINGTRAEGER D98/55X17 C45 Ring carrier	8761311/A	026.787.613.118	0,5
E	0123	2	ST	O-RING OR0074 -03 W 5713 72NBR872 O-RING OR0074 -03 W 5713 72NBR872		000.000.243.323	0,0
E	0132	1	ST	WDR 055X070X08 BAUMSL W 5710 75FPM585 SHAFT SEAL 055X070X08 BAUMSL W 5710		000.000.306.052	0,0
E	0133	1	ST	WDR 055X070X08 BAUMSL W 5710 75FPM585 SHAFT SEAL 055X070X08 BAUMSL W 5710		000.000.306.052	0,0
E	0134	1	ST	WDR 55X70X10 BAUM W5710 75FKM585 SHAFT SEAL 55X70X10 BAUM W5710 75FKM585		002.900.076.606	0,0
E	0135	3	ST	RING,AS 070/03,1X0,82 W 5730 FED-ST LAMELLAR RING, AS (FEY) 070/03,1X0,82 W		000.000.347.199	0,1
E	0136	2	ST	WDR 42X62X8 BAUM 75FPM585 SHAFT SEAL 42X62X8 BAUM 75FPM585		000.050.027.652	0,1
E	0150	1	ST	WAELZL 33011 D 720 ST-KAEF ROLLING CONTACT BEARING 33011 D 720		000.000.777.665	0,7
E	0151	1	ST	WAELZL 33011 D 720 ST-KAEF ROLLING CONTACT BEARING 33011 D 720		000.000.777.665	0,7
E	0160	1	ST	TROMMEL-BREMS K3UF5/6 - FB180 C45N80 Brake drum	8762258/-	027.987.622.588	12,6
E	0200	1	ST	WELLE D109X803 34CRNIMO6 K3/K4 06 SHAFT D109X803 34CRNIMO6 K3/K4 06		000.001.255.247	41,8
E	0201	1	ST	WELLE-FLANSCH 322X0372 C60+N FLANGED SHAFT 322X0372 C60+N	8895938/A	000.000.695.938	35,1
E	0220	1	ST	RINGTRAEGER055X104,0X19 C45 RING CARRIER055X104,0X19 C45	5877840/-	000.000.677.840	0,6
E	0233	1	ST	WDR 055X070X08 BAUMSL W 5710 75FPM585 SHAFT SEAL 055X070X08 BAUMSL W 5710		000.000.306.052	0,0
E	0236	3	ST	RING,AS 070/03,1X0,82 W 5730 FED-ST LAMELLAR RING, AS (FEY) 070/03,1X0,82 W		000.000.347.199	0,1
E	0250	1	ST	WAELZL182928 SL ROLLING CONTACT BEARING182928 SL		000.000.379.145	2,6
E	0251	1	ST	WAELZL 182930 SL ROLLING CONTACT BEARING 182930 SL		000.050.003.926	3,8
E	0252	1	ST	WAELZL 6020 D 625 MET-KAEF ROLLING CONTACT BEARING 6020 D 625		000.000.380.620	1,4
E	0253	1	ST	WAELZL 1020 NU MA/C3 D 5412 MS-KAEF ROLLING CONTACT BEARING 1020 NU MA/C3 D		000.000.380.428	2,0
E	0270	1	ST	LUEFTER 340/ 45 AC45000 FAN 340/ 45 AC45000	5882387/E	000.000.562.387	1,5
E	0273	1	ST	RING-TOL BN0820-045-02 W 3372 FED-ST DISTANCE RING BN0820-045-02 W 3372		000.000.346.005	0,0

Die mit * gekennzeichneten Teile gehören zu einer Baugruppe (G). Die Baugruppe ist nur komplett auszutauschen.
The parts marked with * belong to a subassembly (G). The subassemblymust be replaced complete.

FLENDER	Ersatzteilliste (EL) Spare parts list	Bauart K3UF Type Größe 6,0 Size Übersetzung 28,608 ratio	Seite Page 2/2

Bei Korrespondenz bitte angeben
Please quote in correspondence **EL 4190294-220 DE/EN**

Hierzu gehört Zeichnungs-Nr.
Please refer to DWG No. **6008616**

	Teil-Nr. Part No.	Menge No. off		Benennung Description	Zeichnungs-Nr. Drawings No.	Material-Nr. Ident no.	Gw(kg) Weight
E	0281	1	ST	RS FXM 200- 63SX/H100 W 5813 ST BACKSTOP FXM 200- 63SX/H100 W 5813 ST		000.000.389.016	52,0
E	0300	1	ST	STRDWELLE R 185,0/3,94 1.6587 PINION SHAFT R 185,0/3,94 1.6587	5875775/A	000.000.675.775	6,3
E	0302	1	ST	STIRNRAD L 220,0/4,89 1.6587 GEAR WHEEL L 220,0/4,89 1.6587	5875752/B	000.000.675.752	54,4
E	0350	1	ST	WAELZL 32311 B D 720 ST-KAEF ROLLING CONTACT BEARING 32311 B D 720		000.000.380.564	2,5
E	0351	1	ST	WAELZL 32311 B D 720 ST-KAEF ROLLING CONTACT BEARING 32311 B D 720		000.000.380.564	2,5
E	0400	1	ST	STRDWELLE L 157,0/2,31 1.6587 PINION SHAFT L 157,0/2,31 1.6587	5886512/-	000.000.666.512	7,5
E	0402	1	ST	STIRNRAD R 157,0/2,31 1.6587 GEAR WHEEL R 157,0/2,31 1.6587	5886513/-	000.000.666.513	14,5
E	0450	1	ST	WAELZL 33211 D 720 ST-KAEF ROLLING CONTACT BEARING 33211 D 720		000.000.379.174	1,2
E	0451	1	ST	WAELZL 33211 D 720 ST-KAEF ROLLING CONTACT BEARING 33211 D 720		000.000.379.174	1,2

Order no. - Item	:	4.190.294-80-140
Type	:	P2DA
Size	:	23
Year built	:	2006
Customer	:	F.L. SMIDTH A/S
Project	:	SHARGH CEMENT
Field of application	:	Drive for cylindrical rotary kiln
Drive motor	:	Electric motor
Required power PM	:	225 kW
Direction of rotation (mounting position 514) (looking at shaft ends)		
Input (motor side)	:	ccw
Output	:	ccw
Direction of rotation (mounting position 512) (looking at shaft ends)		
Input (motor side)	:	ccw
Output	:	ccw
Planetary helical gear unit		
Actual ratio	:	82,781
Input speed	:	810 - 1350 1/min
Output speed	:	9,78 - 16,31 1/min
Auxiliary gear unit		
Actual ratio	:	28,608
Input speed	:	1470 1/min
Output speed	:	51,38 1/min
Total weight (without oil filling)	:	~7715 kg
Overall dimensions l x b x h	:	see drawing 6 084 316
Oil quantity	:	~160 l
Oil viscosity	:	ISO VG 320 PAO-oil (synthetic oil)
Oil grade	:	see AH 4.190.294-80-140 EN
Measuring surface sound pressure level (L_{pA})	:	88 +2 dB(A)
Dimensioned drawing	:	6 084 316
Spare parts drawing	:	8 898 116
Assembly drawing (torque arm system)	:	6 010 765
Lubrication diagram	:	6 043 978

Working values

In order to achieve perfect and troublefree operation of the installation the working values of the lubrication diagram 6 043 978 should be observed.

These values have to be set at the customer's evaluation instrument.

Diese technische Unterlage hat gesetzlichen Schutz (DIN 34)

FLENDER	Documentation chart	SHARGH CEMENT
Please quote in correspondence		TD 4190294 EN

Order-no.: 4-0545011-64837

Item	Product	Documents / Operating instructions			Page
00	Drive system	Technical data	TD 4190294 EN		3
		Dimension drawing	6 084 316 d 6 010 765 a 6 043 978 -		4-6
20/ 60	Universal joint shaft flange	Dimension drawing	6 108 385 a		7
		Spare part drawing			
		Parts list	SL 4190294-020 EN SL 4190294-060 EN		8-9
40	Universal joint shaft	Operating instructions	BA GWB.GLW.000 EN	Universal joint shaft	10-25
80/ 120	Gear unit P2DA 23	Operating instructions	BA 4190294 EN	Gear unit	26-73
			BA 7300 EN 01.05	Lubricants	74 –101
			B 6100 EN 03.02	Resistance thermometer	108-112
			B 5122 EN 05.95	Breather filter	113
			BA ERM.RSV.000 EN	Non-return valve	114-115
			B 5100 EN 03.02	Oil drain valve	116-117
			BA TUR.SEN.031 EN	Pulse transmitter	118
		Dimension drawing	See item 00		4-6
		Spare part drawing	8 898 116 b		119
		Spare parts list	EL 4190294-080 DE/EN EL 4190294-100 DE/EN EL 4190294-120 DE/EN EL 4190294-140 DE/EN		120-125
160	Oil supply system OWGD 5	Operating instructions	BA 9702 EN 05.98	Oil supply system	126-150
			BA ELW.HAH.000 EN	Three-way valve	151-155
			BA STE.PUM.000 EN	Gear pump	156-170
			BA 610.4234821 a	Three-phase motor	171-196
			B 5921 EN 05.95	Change-over filter	197-199
			BA SER.KUE.001	Water-oil cooler	200-205
			B 5916 EN 03.97	Non-return valve	206-207
			B 5914 EN 03.02	Manometer	208
			B 5924 EN 04.99	Thermometer	209
			B 5927 EN 09.03	Flow monitor	210-214
			BA DAN.VEN.001 EN	Water flow regulator	215-218
		Dimension drawing	6 043 465_1 a		219
		Lubrication schedule	6 043 465_2 a		220
		Connection plan	5 353 879		221-224
		List of equipment	GL 1256327 EN		225-227

A. FRIEDR. FLENDER AG, D - 46393 Bocholt
Tel. 02871/92-0; Fax 02871/922596

Datum	Name	Abt.
13.06.2006	Benning	HDVD.FR

FLENDER	Documentation chart	SHARGH CEMENT
Please quote in correspondence		TD 4190294 EN

200/ 220	Helical gear unit K3UF 6	Operating instructions	BA 5012 EN 10.98	Gear unit	228-271
			BA 7300 EN 01.05	Lubricants	272-299
		Dimension drawing	6 095 227 -		300
		Spare part drawing	6 008 616 a		301
		Spare parts list	EL 4190294-200 DE/EN EL 4190294-220 DE/EN		302-305
240	Coupling FAK 342	Operating instructions	BA 4600 EN 09.04	Coupling	306-343
		Dimension drawing	6 079 554 -		344
		Spare part drawing			
		Parts list	SL 4190294-240 DE/EN		345-346
260	EOC 115	Operating instructions	BA 4600.1 EN	EOC	347-357
		Parts list	SL 4190294-260 DE/EN		358
280	Centrifugal Brake FB 180	Operating instructions	BA 3000 EN 02.97	Brake	359-378
		Dimension drawing	5 273 774 f		379
		Spare part drawing			
		Spare parts list	SL 4190294-280 DE/EN		380
300	Brake BFK 458-25	Operating instructions	BA KL458-004a EN	Brake	381-428

Order no. - Item	:	4.190.294-80-140
Type	:	P2DA
Size	:	23
Year built	:	2006
Customer	:	F.L. SMIDTH A/S
Project	:	SHARGH CEMENT
Field of application	:	Drive for cylindrical rotary kiln
Drive motor	:	Electric motor
Required power PM	:	225 kW
Direction of rotation (mounting position 514) (looking at shaft ends)		
Input (motor side)	:	ccw
Output	:	ccw
Direction of rotation (mounting position 512) (looking at shaft ends)		
Input (motor side)	:	ccw
Output	:	ccw
Planetary helical gear unit		
Actual ratio	:	82,781
Input speed	:	810 - 1350 1/min
Output speed	:	9,78 - 16,31 1/min
Auxiliary gear unit		
Actual ratio	:	28,608
Input speed	:	1470 1/min
Output speed	:	51,38 1/min
Total weight (without oil filling)	:	~7715 kg
Overall dimensions l x b x h	:	see drawing 6 084 316
Oil quantity	:	~160 l
Oil viscosity	:	ISO VG 320 PAO-oil (synthetic oil)
Oil grade	:	see AH 4.190.294-80-140 EN
Measuring surface sound pressure level (L_{pA})	:	88 +2 dB(A)
Dimensioned drawing	:	6 084 316
Spare parts drawing	:	8 898 116
Assembly drawing (torque arm system)	:	6 010 765
Lubrication diagram	:	6 043 978

Working values

In order to achieve perfect and troublefree operation of the installation the working values of the lubrication diagram 6 043 978 should be observed.

These values have to be set at the customer's evaluation instrument.

Diese technische Unterlage hat gesetzlichen Schutz (DIN 34)

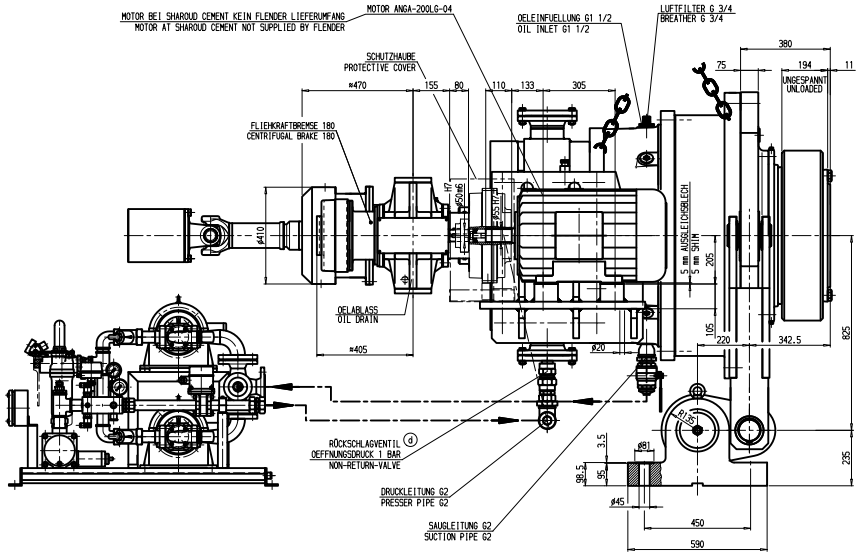

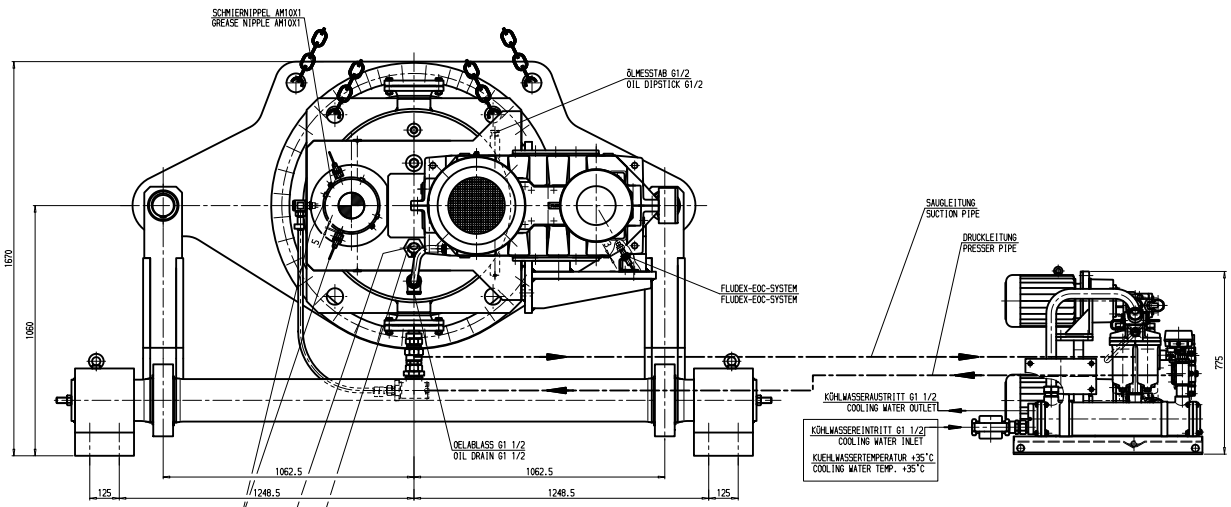

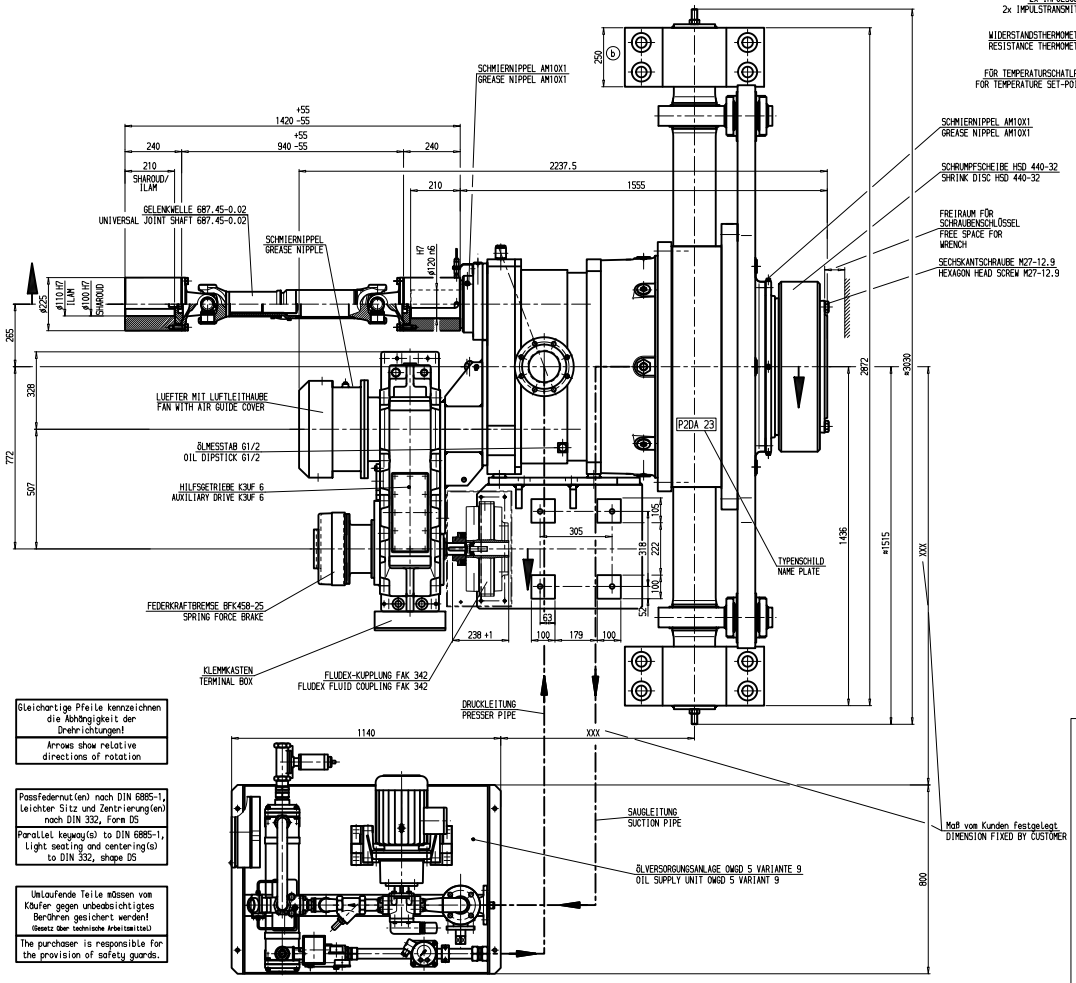

GEWICHT WEIGHT *		
P2DA 23	CA./APPROX.	4730 KG
OWGD 5	CA./APPROX.	250 KG
DREHMOMENTSTÜTZE KOMPL. TORQUE ARM ALL INC.	CA./APPROX.	1890 KG
FLUDEX-KUPPLUNG FAK 342 FLUDEX FLUID COUPLING FAK 342	CA./APPROX.	31 KG
K3UF 6	CA./APPROX.	700 KG
FB 180	CA./APPROX.	15 KG
FEDERKRAFTBREMSE BFK458-25 SPRING FORCE BRAKE BFK458-25	CA./APPROX.	30 KG
GELENKWELLE 687.45-0.02 UNIVERSAL JOINT SHAFT 687.45-0.02	CA./APPROX.	69 KG
GEWICHT WEIGHT GES. TOTAL	CA./APPROX.	7715 KG

TECHN. DATEN / ENGINEERING DATA	
HAUPTANTRIEB / MAIN DRIVE	HILFSANTRIEB / AUXILIARY DRIVE
P_M = 225 kW	P_M = 30 kW
i_{ist} = 82,781 GEAR RATIO	i_{ist} = 28,608 GEAR RATIO
n_1 = 1350 - 810 1/min	n_1 = 1470 1/min
n_2 = 16,31 - 9,78 1/min	n_2 = 51,38 1/min
$T_{2\,max.}$ = 219 700 Nm	n_{P2DA24} = 0,62 1/min
ÖLMENGE : 160 L OIL QUANTITY	
ÖLVISKOSITÄT : PAO synth. ÖL / PAO synth. oil OIL VISKOSITY VG 320	

KENNWORT : ILAM PASSWORD	UMGEBUNGSTEMPERATUREN: -10°C,...,+45°C AMBIENT TEMPERATURES	
KENNWORT : SHAROUD CEMENT PASSWORD	UMGEBUNGSTEMPERATUREN: -18°C,...,+40°C AMBIENT TEMPERATURES	
b KENNWORT : KAROON CEMENT PASSWORD	UMGEBUNGSTEMPERATUREN: -..°C,...,+..°C AMBIENT TEMPERATURES	
c KENNWORT : SHARGH CEMENT PASSWORD	UMGEBUNGSTEMPERATUREN: -12°C,...,+40°C AMBIENT TEMPERATURES	

EINBAULAGE / MOUNTING POSITION
M. 1:15

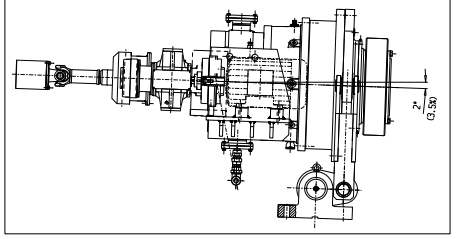

ABMESSUNGEN AM WELLENENDE DER ANZUTREIBENDEN ARBEITSMASCHINE
DIMENSIONS ON SHAFTEND OF DRIVEN MACHINE
M. 1:3.5

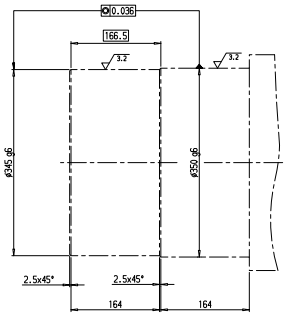

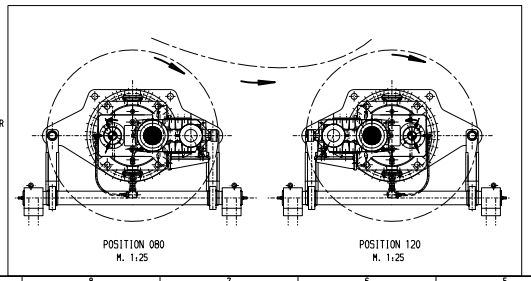

Gleichartige Pfeile kennzeichnen die Abhängigkeit der Drehrichtungen!
Arrows show relative directions of rotation

Passfedernut(en) nach DIN 6885-1, leichter Sitz und Zentrierung(en) nach DIN 332, Form DS
Parallel keyway(s) to DIN 6885-1, light seating and centering(s) to DIN 332, shape DS

Umlaufende Teile müssen vom Käufer gegen unbeabsichtigtes Berühren gesichert werden! (Gesetz über technische Arbeitsmittel)
The purchaser is responsible for the provision of safety guards.

4/428

Zeichen	Änderungsbeschreibung	Datum	Name	Norm	geprüft
d	HB/J13 Bezeichnung von Turck-Sensor und Rückschlagventil entfernt	2005-09-19	ETG	.	2005-09-19
c	E4 Kennwort SHARGH CEMENT für Auftrag 4.190.294 hinzu	2005-08-05	HDB	.	2005-08-05
b	F4/H12 Maß 250 und Kennwort hinzu	2005-07-14	ETG	.	2005-07-15
a	. Abmessungen Motorwellenende für Projekt ILAM hinzu	2005-05-18	THL	.	2005-05-18
Al	Feld				2005-03-22

Auftr.-Nr. 4168408/80

Toleranzen nach DIN ISO 8015 — Allgemeintoleranzen ±30 ±0,3 sonst nach DIN ISO 2768-mH

FLENDER

Nicht gekennzeichnete Oberflächen: Rauhwerte Ra in µm

Gez.	HD	2005-03-22	Thiele
Gepr.	HD	2005-03-22	Thiele
Norm	.	.	.
Abt.	Datum	Name	
Maßstab 1:8		Gewicht (kg)	
Trägheitsmoment J (kgm²)		.	

Benennung: MASSZCHNG P2DA 23
DIMENSION DRAWING P2DA 23
Rohteil nach Zeichnung: . sonst nach Zeichnung: .
Format A4 Zeichnungs-Nr. 5M 6 084 316 Al
Ersatz für . Aus Zchng. 6 062 643

Basis-Nr. Modell-Nr. Al Anz. Teil

Maße in mm — Schutzvermerk ISO 16016 beachten

PLOT-DATUM: 05-MAY-2006 10:30:07 H. Raschka/HDVZ

E: Alle drehmomentübertragenden Schrauben nach Arbeitsblatt W1813 angezogen

A: Mit Loctite Nr.601 gesichert

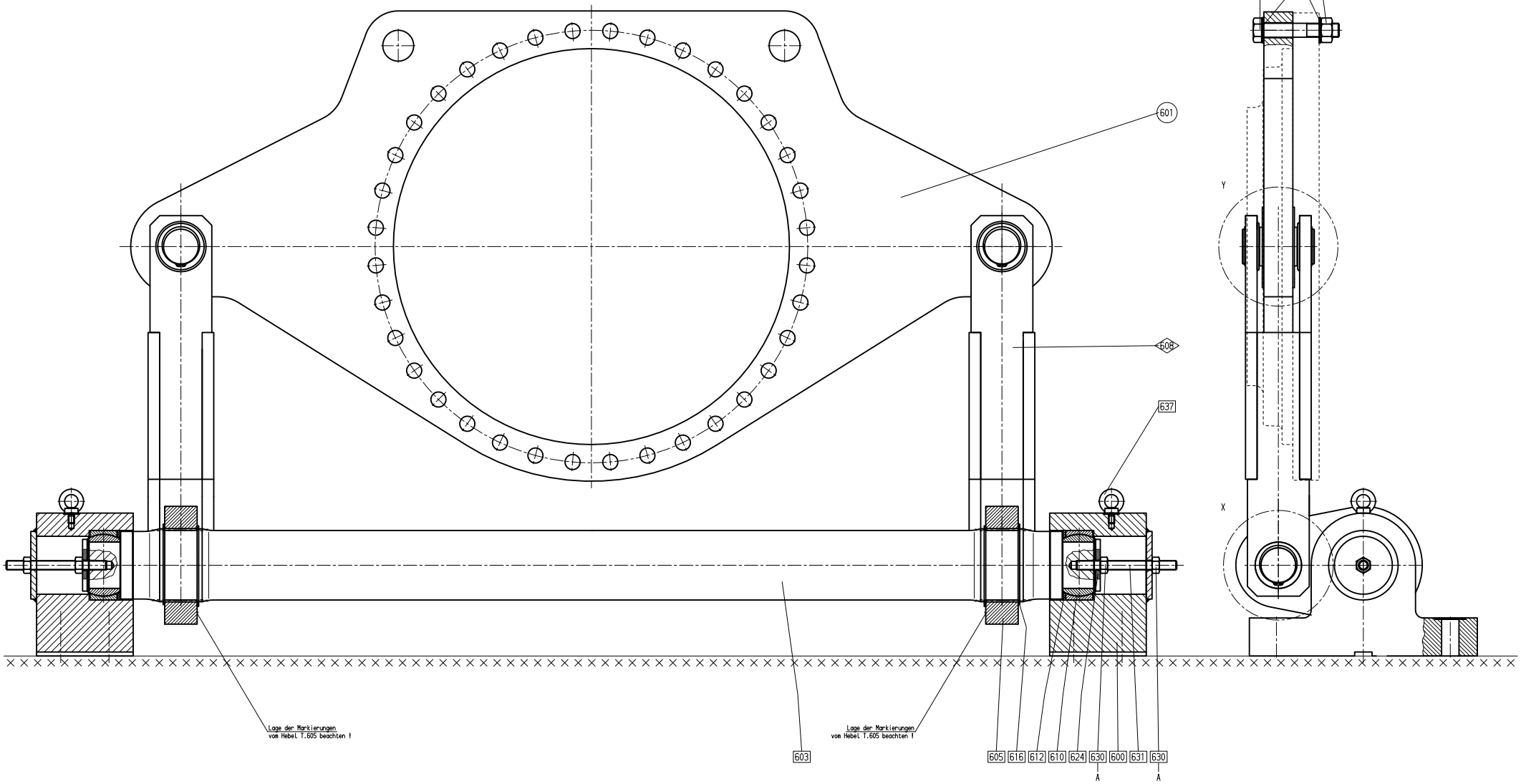

X
M 1:3

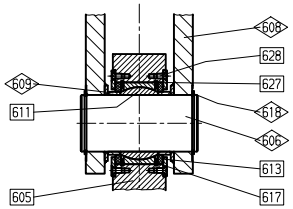

Y
M 1:3

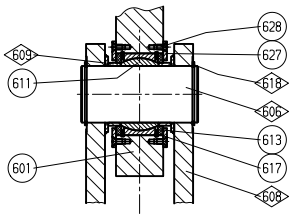

ⓐ

Gleichartig gekennzeichnete Teile werden im zusammengebautem Zustand als Montagegruppe versand.

a	AG	Kennzeichnung hinzu		2003-12-02	HDB	.	2003-12-02
Al	Feld	Änderungsbeschreibung		Datum	Name	Norm	2002-10-24
				Auftr.-Nr.	.		gesichert

Toleierung nach DIN ISO 8015

Allgemeintoleranzen ≤30 ±0,3 sonst nach DIN ISO 2768-mH

FLENDER

Nicht gekennzeichnete Oberflächen.

Rauhwerte Ra in µm

Gez.	SEO	2002-07-17	Srivathsan
Gepr.	HD	2002-10-24	Thiele
Norm	.	.	.
	Abt.	Datum	Name
Maßstab	1:3.5		Gewicht (kg)
Trägheitsmoment J (kgm²)			.

Werkstoff /-Nr. . .

Benennung Schl.-Nr.: 1414

Z-ZEICHNUNG

P25A Gr. 23/24

Rohteil nach Zeichnung . sonst nach Zeichnung .

Format Art Zeichnungs-Nr. Al 5 . 6 010 765 a

Ersatz für . Aus Zchng. 5 866 811

Basis-Nr. Modell-Nr. Al A Anz. Teil

Maße in mm

Schutzvermerk ISO 16016 beachten

PLOTT-DATUM: 05-MAY-2006 12:03:17 H. Raschle/HDVZ

5/428

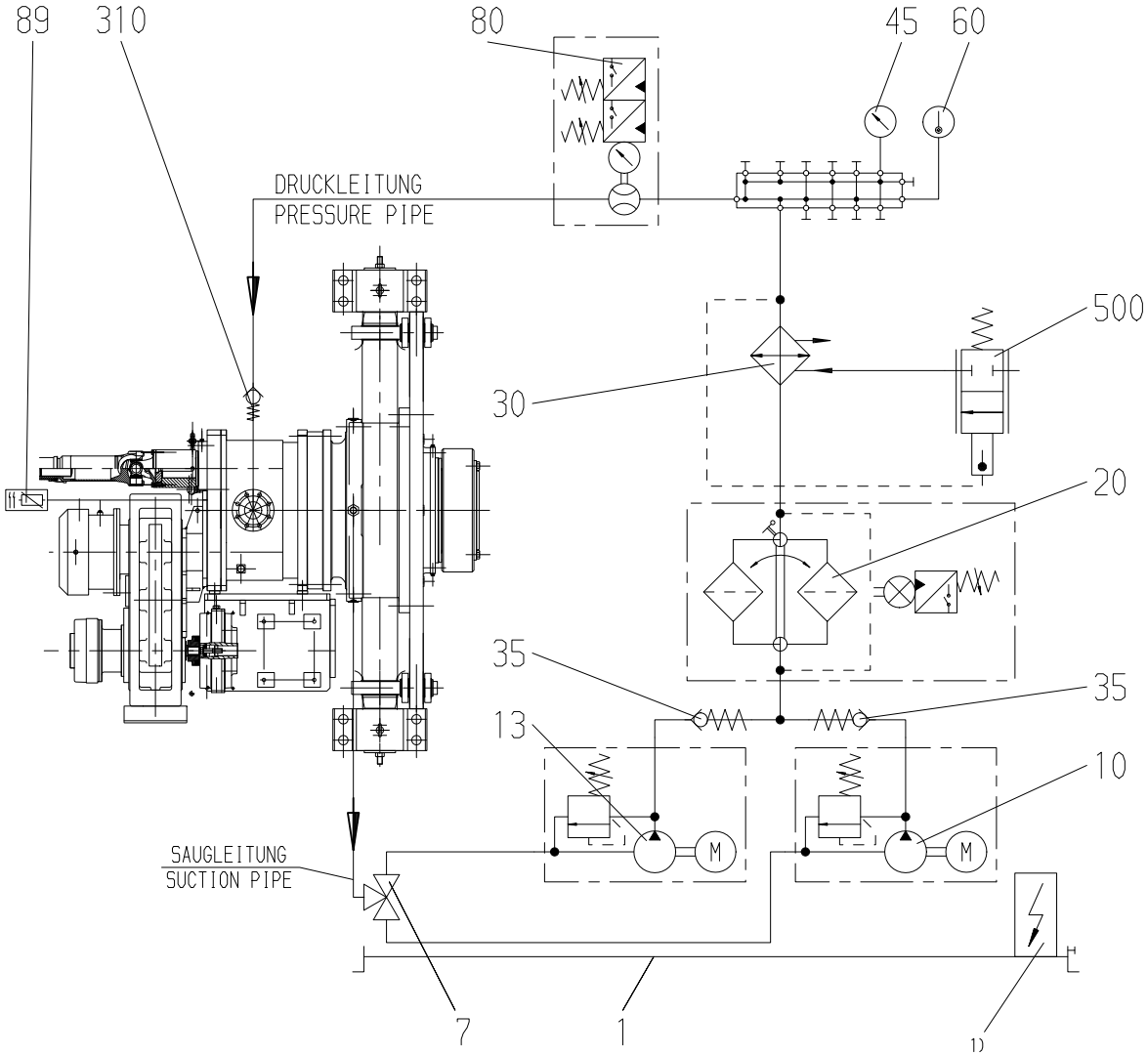

OELTEMPERATUR	SCHALTUNG	GERAET / TEIL-NR.
> +5°C	PUMPE AN NACH 30 SEK. HAUPTMOTOR AN	THERMOM-WIDST. TEIL 89
⩾ +30°C	FILTERVERSCHMUTZUNG-FREIGABE	THERMOM-WIDST. TEIL 89
> +55°C	VENTIL-KUEHLWASSER "AUF"	THERMOM-WIDST. TEIL 89
⩽ +45°C	VENTIL-KUEHLWASSER "ZU" PUMPE LÄUFT WEITER	THERMOM-WIDST. TEIL 89
> +80°C	"WARNUNG"	THERMOM-WIDST. TEIL 89
> +90°C	HAUPTMOTOR "AUS"	THERMOM-WIDST. TEIL 89

OEL TEMPERATURE	CONTROL	EQUIPMENT/PART NO.
> +5°C	PUMP ON AFTER 30 SEC. MAIN MOTOR ON	THERMOM-RESIST. TEIL 89
⩾ +30°C	FILTERCONTAMINATE RELEASED	THERMOM-RESIST. TEIL 89
> +55°C	VALVE-COOLING WATER "OPEN"	THERMOM-RESIST. TEIL 89
⩽ +45°C	VALVE-COOLING WATER "CLOSE" PUMP GOES ON	THERMOM-RESIST. TEIL 89
> +80°C	"WARNING"	THERMOM-RESIST. TEIL 89
> +90°C	MAIN MOTOR "OFF"	THERMOM-RESIST. TEIL 89

TEIL-NR.: 89 = PT100
PART-NO.: 89 = PT100

1) Klemmenkasten und Verdrahtung nur im Auftragsfall
1) TERMINAL BOX AND WIRING TO BE ORDERED SEPARATELY

UEBRIGE GERAETETEILNR. SIEHE SCHMIERSCHEMA ZEICHNG.: 6043465
OTHER EQUIPMENT PART-NO. SEE LUBRICTION DIAGRAM DRW.: 6043465

64428

2004-04-22
Auftr.-Nr. 4097705/080 gesichert

Tolerierung nach DIN ISO 8015 | Allgemeintoleranzen ⩽30 ±0,3 sonst nach DIN ISO 2768-mH

FLENDER

Werkstoff /-Nr. . .

Benennung Schl.-Nr.: 0500
SCHMIERSCHEMA
P2DA / OWGD

Nicht gekennzeichnete Oberflächen: .
Rauhwerte Ra in µm

	Gez.	HD	2004-04-22	Steinig
	Gepr.	HD	2004-04-22	Hobbold
	Norm	.	.	.
		Abt.	Datum	Name

Maßstab 1:1 | Gewicht (kg)
Trägheitsmoment J (kgm²) .

Basis-Nr. | ÄI | Ä
Modell-Nr. | Anz. | Teil

Rohteil nach Zeichnung . | sonst nach Zeichnung .

Format Art | Zeichnungs-Nr. | ÄI
8 | 6 043 978 | .
Ersatz für . | Aus Zchng. 6 044 305

Schutzvermerk ISO 16016 beachten

PLOTT-DATUM: 05-MAY-2006 12:03:21 H. Raschig/HDVZ

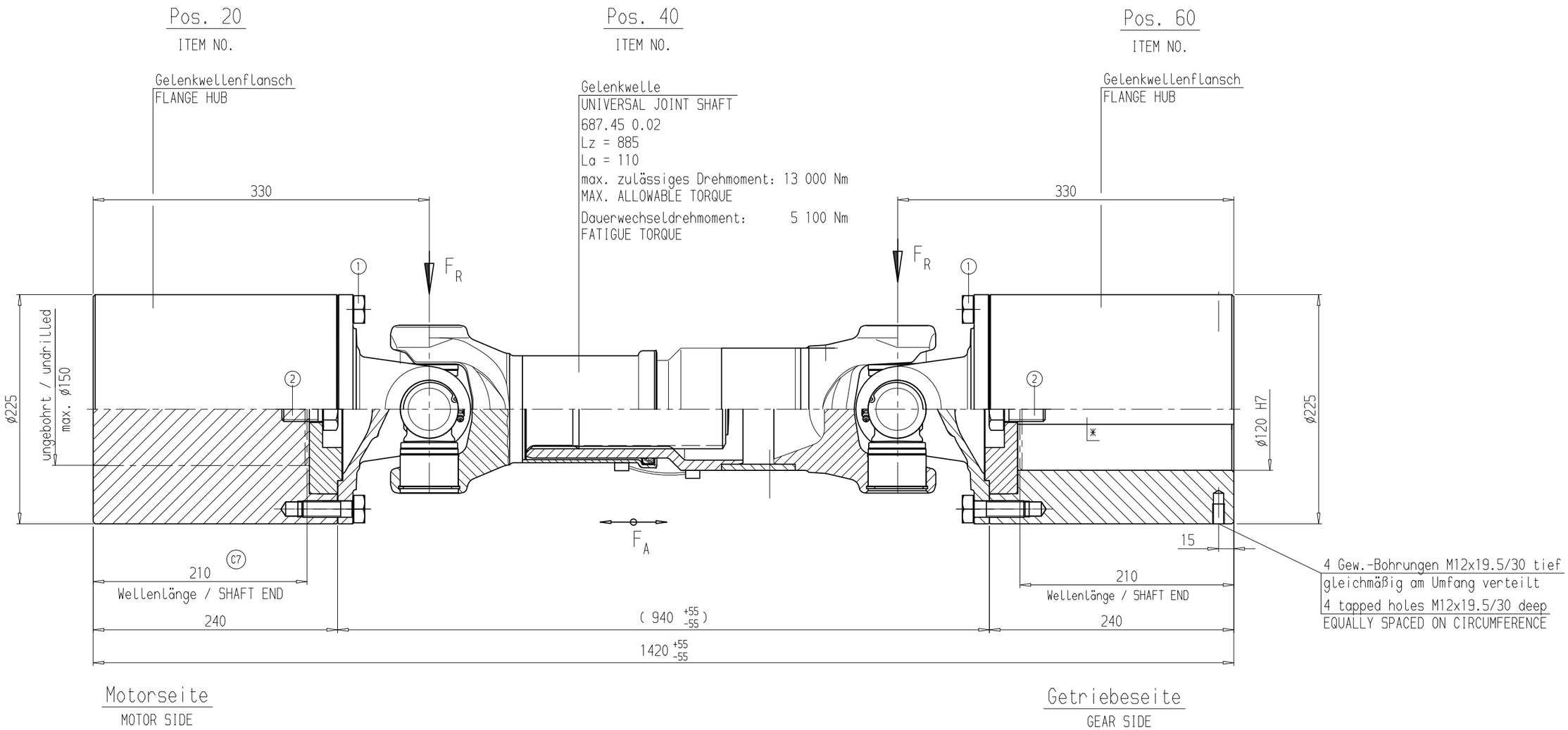

Anziehdrehmomente
TIGHTENING TORQUE

① M16 210 Nm
② M24 410 Nm ✱
③ M36 410 Nm ✱

✱ Mit Loctite 242 gesichert
✱ SECURED WITH LOCTITE 242

Umlaufende Teile müssen vom Käufer gegen unbeabsichtigtes Berühren gesichert werden!
(Gesetz über technische Arbeitsmittel)

The purchaser is responsible for the provision of safety guards.

✱ Nut nach DIN 6885/1
✱ keyway acc. to DIN 6885/1

Drehfedersteife CT :
torsional stiffness CT :

CT = 3.10 x 10^5 Nm/rad

Position / ITEM NO.	20	40	60
Gewicht / WEIGHT (kg)	60	40	55
Trägheitsmoment / MOMENT OF INERTIA (kg m²)	0.45	0.13	0.43

ÄI	Feld	Änderungsbeschreibung	Datum	Name	Norm	
a	C7	Nabenlänge hinzu	2006-02-15	KHM	KHM	2006-02-15
						2006-01-10

Zul. Abweichungen für Maße ohne Tol.-Angaben: mittel DIN 7168 | Auftr.-Nr. 4190294 | gesichert

FLENDER

Werkstoff /-Nr. .

Benennung Schl.-Nr.: 0231
KPPLG KOMBINATION

Nicht gekennzeichnete Oberflächen: .

Gez.	KUPE	2006-01-10	Tiebing
Gepr.	KUPE	2006-01-10	Tiebing
Norm	.	.	.
	Abt.	Datum	Name
Maßstab	1:3		Gewicht (kg)
Trägheitsmoment J (kgm²)	1.0		155

Rauhwerte Ra in µm

Flansch ø225 / Gelenkwelle 687.45 / Flansch ø225

Rohteil nach Zeichnung: . | sonst nach Zeichnung: .

Format Art Zeichnungs-Nr. ÄI
7 M 6 108 385 a

Basis-Nr. | ÄI | Ä Anz. | Teil
Modell-Nr.

Ersatz für . | Aus Zchng. 6 067 496

Maße in mm

Schutzvermerk ISO 16016 beachten

PLOTT-DATUM: 05-MAY-2006 13:06:27 Fr.Tiebing/PZ6

FLENDER	**Stückliste (SL)** Parts list	**Bauart** Type **Größe** Size **Übersetzung** ratio	**Seite** Page 1/1

Bei Korrespondenz bitte angeben
Please quote in correspondence **SL 4190294-020 DE/EN**

Hierzu gehört Zeichnungs-Nr.
Please refer to DWG No. **8216212**

	Teil-Nr. Part No.	Menge No. off		Benennung Description	Zeichnungs-Nr. Drawings No.	Material-Nr. Ident no.	Gw(kg) Weight
E	0100	1	ST	NABE-FLANSCH VARI FLANGE HUB		000.009.900.257	
E	0101	1	ST	RING-STUETZ 225 16MnCrS5 SUPPORTING RING 225 16MnCrS5	8215878/B	000.000.852.362	5,0
E	0102	1	ST	SCHRB-SKT M24X060 D 933 8.8 HEXAGON HEAD SCREW M24X060 D 933 8.8		000.000.321.841	0,3

Die mit * gekennzeichneten Teile gehören zu einer Baugruppe (G). Die Baugruppe ist nur komplett auszutauschen.
The parts marked with * belong to a subassembly (G). The subassemblymust be replaced complete.

A. Friedr.Flender AG, D 46393 Bocholt,
Tel.+ 49(0)2871/92-0, Fax+ 49(0)2871/922596, http://www.flender.com

Datum Date	KLEIN-HESSLING,MARION FR. 2850	
16.05.2006	Rev.:	

FLENDER	**Stückliste (SL)** Parts list	**Bauart** Type **Größe** Size **Übersetzung** ratio	**Seite** Page 1/1

Bei Korrespondenz bitte angeben
Please quote in correspondence **SL 4190294-060 DE/EN**

Hierzu gehört Zeichnungs-Nr.
Please refer to DWG No. **8216212**

	Teil-Nr. Part No.	Menge No. off		Benennung Description	Zeichnungs-Nr. Drawings No.	Material-Nr. Ident no.	Gw(kg) Weight
E	0100	1	ST	NABE-FLANSCH VARI FLANGE HUB		000.009.900.257	
E*	0101	1	ST	RING-STUETZ 225 16MnCrS5 SUPPORTING RING 225 16MnCrS5	8215878/B	000.000.852.362	5,0
E	0102	1	ST	SCHRB-SKT M24X060 D 933 8.8 HEXAGON HEAD SCREW M24X060 D 933 8.8		000.000.321.841	0,3

Die mit * gekennzeichneten Teile gehören zu einer Baugruppe (G). Die Baugruppe ist nur komplett auszutauschen.
The parts marked with * belong to a subassembly (G). The subassemblymust be replaced complete.

A. Friedr.Flender AG, D 46393 Bocholt,
Tel.+ 49(0)2871/92-0, Fax+ 49(0)2871/922596, http://www.flender.com

Datum Date	TIEBING, STEFANIE	2691
16.05.2006	Rev.:	

DANA SPICER GELENKWELLENBAU

GWB®

Einbau und Wartung

für Gelenkwellen / Industrie-Anwendungen

Installation and Maintenance

for Cardan Shafts / Industrial Applications

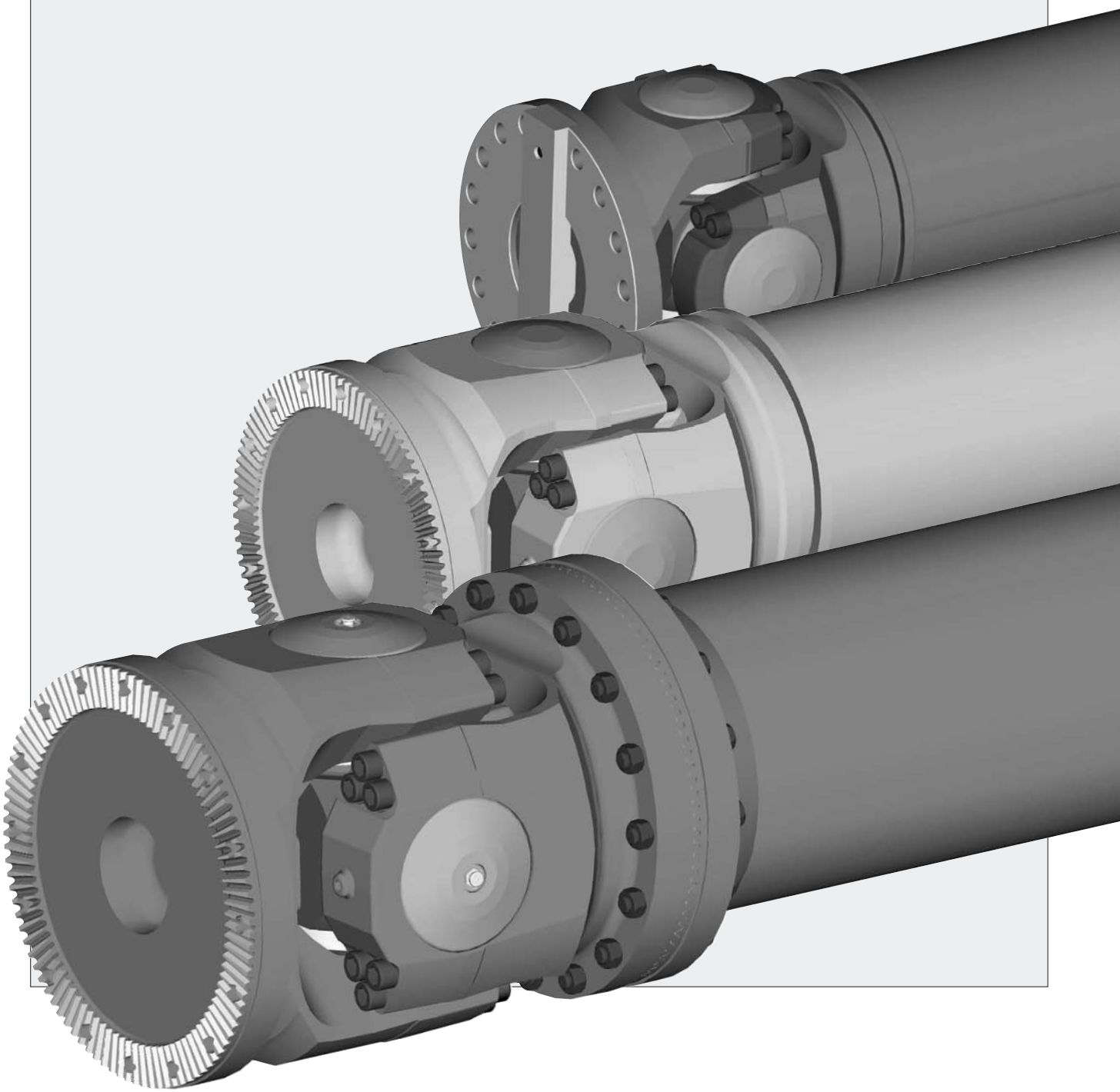

Inhalt

Table of Contents

Sicherheitshinweise	Seite 1	***Safety instructions***	*Page 1*
Transport und Lagerung	Seite 2	***Transport and storage***	*Page 2*
Einbau • Ausbau - Einbau - Ausbau - Flanschverschraubung - Anschlussflansche	Seite 3	***Installation • Disassembly*** *- Installation* *- Disassembly* *- Flange bolting* *- Companion flanges*	*Page 3*
Wartung - Wartungsfristen - Kontrollarbeiten - Abschmierung - Empfohlene Nachschmierfristen	Seite 9	***Maintenance*** *- Maintenance intervals* *- Inspection* *- Lubrication* *- Recommended re-greasing intervals*	*Page 9*
Instandsetzung	Seite 11	***Repair***	*Page 11*
Richtlinien für Anfragen und Bestellungen	Seite 12	***Directions for inquiries and orders***	*Page 12*
Kundendienst	Seite 13	***After-sales service***	*Page 13*

DANA SPICER GELENKWELLENBAU GWB®

Postanschrift/*Postal address:*
P.O. Box 10 13 62
45013 Essen/Germany

Hausanschrift/*Office address:*
2. Schnieringstr. 49
45329 Essen/Germany

Telefon: 00 49 (0) 2 01 – 81 24-0
Telefax: 00 49 (0) 2 01 – 81 24-652
E-Mail: industrial@dana.com
Internet: http://www.gwb-essen.de

Copyright by Spicer Gelenkwellenbau GmbH & Co. KG

Design: GK Marketing Service GmbH

Alle Rechte vorbehalten.
Jegliche Vervielfältigung dieser Veröffentlichung, auch auszugsweise, darf nicht ohne ausdrückliche Genehmigung des Copyright-Inhabers erfolgen.

Richtlinien betreffend Urheberrecht.
Produkthaftung und Sicherheitshinweis siehe STD 1016-005.

Mit diesem Katalog sind alle früheren Angaben ungültig.
Änderungen vorbehalten.

Gedruckt in Deutschland 70.002.00.09.2002

Copyright by Spicer Gelenkwellenbau GmbH & Co. KG

Design: GK Marketing Service GmbH

All rights reserved.
Any reproduction of this publication or parts thereof is subject to the explicit authorization of the copyright-holder.

Regulation concerning Copyright.
Productliability and Safety-Directions see STD 1016-000.

This catalogue supersedes all former editions.
We reserve the right to make alterations.

Printed in Germany 70.002.00.09.2002

Sicherheitshinweise

Unsere Produkte sind gemäß dem letzten Stand der Technik entwickelt und getestet. Die Eigenschaften der Produkte, die in unserem Informationsmaterial genannt oder von uns schriftlich fixiert worden sind, unterlagen unserer sorgfältigen Prüfung.

Anderweitige Festlegungen sind möglich, bedürfen aber unserer schriftlichen Bestätigung.

Die Kenntnis der spezifischen Anforderungsprofile an unser Produkt für einen bestimmten Anwendungsfall liegt beim Besteller, und es obliegt ihm, die Zeichnungen und Unterlagen, die von uns aufgrund von Besteller-Angaben gefertigt wurden, auf ihre Richtigkeit zu untersuchen und die Eignung zu dem vorgesehenen Einsatzzweck zu prüfen. Die Auswahl von Gelenkwellen und deren Größenfestlegung unsererseits können stets nur als Empfehlung betrachtet werden.

Zur Vermeidung von Personen- und Sachschäden sind bei Anwendung und Handhabung von Gelenkwellen unbedingt die folgenden Sicherheitshinweise zu beachten!

- Überall dort, wo eine Gefährdung von Menschen und Material durch rotierende Gelenkwellen möglich ist, sind vom Anwender und/oder Betreiber entsprechende Sicherheitsvorkehrungen zu treffen.
  EG-Maschinenrichtlinie beachten!
- Einbau-, Montage- und Wartungsarbeiten an Gelenkwellen dürfen nur von **fachkundigem Personal** durchgeführt werden.
- Die bei der Auslegung der Gelenkwellen festgelegten Betriebsdaten, wie Drehmomente, Drehzahlen, Beugungswinkel, Längen usw. dürfen nicht überschritten werden.
- Bei Veränderungen, die an der Gelenkwelle **ohne unsere schriftliche Zustimmung vorgenommen werden, entfällt jegliche Gewährleistung.**

GWB-Gelenkwellen werden als einbaufertige Aggregate geliefert. Die Gelenkwellen sind betriebsfertig abgeschmiert. Sie sind den technisch dokumentierten Unterlagen entsprechend ausgewuchtet und farbbehandelt.

⚠ Der Wuchtzustand einer Gelenkwelle darf auf keinen Fall geändert werden.

Unzulässige Unwucht kann zu unruhigem Lauf und damit zu frühzeitigem Verschleiß von Gelenk- und Anschlußlagern führen. Im Extremfall kann die Gelenkwelle aus dem Aggregat geschleudert werden.

Verletzungsgefahr!
Fangvorrichtung vorsehen!

Weitere Hinweise zur Sicherheit sind den folgenden Themen zugeordnet.

Safety instructions

Our products have been developed and tested according to the latest state-of-the-art engineering. The characteristic features of the products which are described in our information material or which we specified in writing were subjected to proper and careful inspection.

Other features are possible but they are subject to our written confirmation.

The knowledge of the various demands on our product for a particular application lies with the purchaser, and it is incumbent on him to verify the drawings and documents prepared by ourselves on the basis of the data made available by the purchaser and to examine the suitability of the product for the proposed use. The selection of shaft types and the specification of their sizes on our part shall in all cases be considered as a recommendation only.

When using and handling cardan shafts, the following safety instructions must be strictly observed to prevent damage to persons and property.

- *Where danger to people or material can be caused by rotating cardan shafts, a safety device has to be installed by the user and/or operator.*
  Observe the EC Regulations for Machinery!
- *Installation, assembly and maintenance work may only be carried out by **qualified personnel**.*
- *The operating data of the cardan shafts, such as max. torque, speed, deflection angles, lengths etc. must never be exceeded.*
- *If cardan shafts are in any way altered **without our written consent, they are no longer covered by our warranty.***

GWB cardan shafts are delivered as complete units ready for installation. The shafts are greased for operation. They are balanced and painted in accordance with the technical information sheets.

⚠ *The balance state of a cardan shaft must on no account be altered.*

An inadmissible out-of-balance of a shaft may result in uneven running and premature wear of the joints and the bearings of the units to which the cardan shaft is connected. In extreme cases the cardan shaft could break and shaft components could be thrown at speed from the vehicle or machine.

Danger of injury!
Provide a safety guard device!

Further safety instructions are incorporated in the relevant items.

Transport und Lagerung

⚠ **Um Verletzungen von Personen und Beschädigungen an der Gelenkwelle zu vermeiden, ist für einen sicheren Transport und sichere Lagerung zu sorgen.**

Folgende Hinweise sind zu beachten:

- Belastungssichere Kunstfaserseile oder Hebebänder verwenden. Bei Stahlseilen auf Kantenschutz achten.
- Transport sollte in waagerechter Lage erfolgen (s. Bild). Bei nicht waagerechtem Transport muss eine Sicherung gegen Auseinanderfallen vorgesehen werden. **Verletzungsgefahr!**

Transport and storage

⚠ ***To prevent injuries of persons and damage to the cardan shafts always make sure that the shafts are safely transported and stored.***

Please consider the following precautions:

- *Use strong nylon ropes or lifting belts. When using steel cords, protect the edges.*
- *Cardan shafts should be transported in a horizontal position (see illustration). For non-horizontal transportation additional precautions must be taken to prevent the splined parts from separating.* ***Danger of injury!***

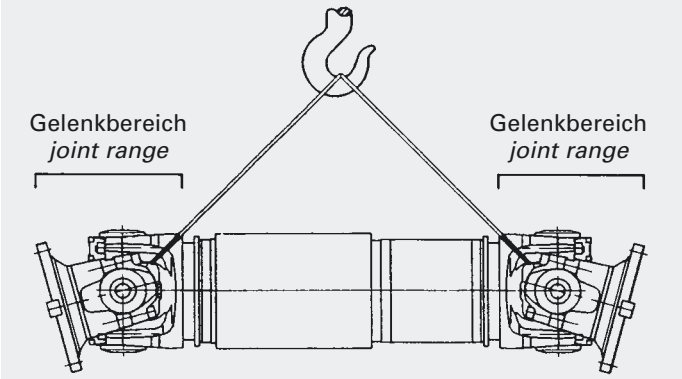

- Beim Anheben und Absetzen der Gelenkwelle können in den Gelenkbereichen die beweglichen Teile (Flanschmitnehmer und Zapfenkreuz) durch Abkippen zu Verletzungen führen. **Nicht in das Gelenk fassen! Quetschgefahr!**
- Schlag und Stoß bei Transport und Lagerung vermeiden.
- Profilschutzhülse (1) und Dichtung (2) nicht mit dem Gewicht der Gelenkwelle oder Fremdgewichten belasten.

- *When lifting or putting down the shaft, the moving parts (flange yoke and journal cross) may tilt and lead to injuries.* ***Keep hands away from the joint! Danger of crushed hands!***
- *Avoid bumps and knocks during transport and storage.*
- *Do not store or handle the shaft with any stress or load on the spline protection (1) or the seal (2).*

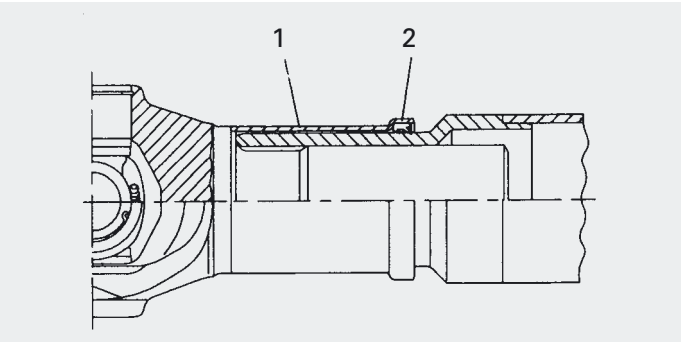

Baureihen / *Series* 587, 687, 688

- Lagerung in geeigneten Gestellen, so dass die Flanschmitnehmer nicht belastet werden.
- Sichern gegen Wegrollen, z. B. durch Holzkeile.
- Bei stehender Lagerung Gelenkwellen gegen Umstürzen sichern.
- Lagerung in trockenen Räumen.

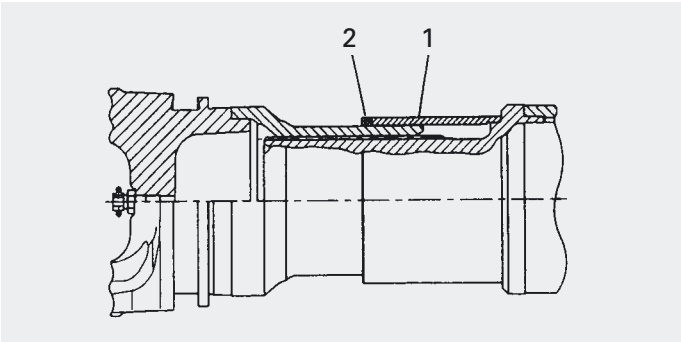

Baureihen / *Series* 390, 392, 393

- *Use appropriate frames or racks for storage, so that the flange yokes are not loaded.*
- *Use chocks or blocks to prevent cardan shaft from rolling.*
- *Secure shaft against falling over if it is stored in a vertical position.*
- *Keep cardan shafts in a dry place.*

Einbau und Ausbau von Gelenkwellen

Einbau

⚠ Um die in der Dokumentation festgelegten Eigenschaften der Gelenkwelle zu gewährleisten, darf ihr Anlieferzustand nicht verändert werden.

Überall dort, wo eine Gefährdung von Menschen und Material durch rotierende Gelenkwellen möglich ist, sind vom Betreiber entsprechende Sicherheitsvorkehrungen zu treffen.

- Geeignete Sicherheitseinrichtungen (z.B. Fangbügel, stabile Schutzgitter) müssen ein Umher- oder Herausschleudern von Gelenkwellenteilen verhindern. **Lebensgefahr!**
- Gelenkwellen sind biegeelastische Körper, die auf Biegeschwingungen bzw. biegekritische Drehzahlen berechnet werden müssen. Die max. zulässige Betriebsdrehzahl muss aus Sicherheitsgründen in genügendem Abstand unter der biegekritischen Drehzahl 1. Ordnung liegen.
- Aus Gründen der Laufruhe und der Sicherheit der Gelenkwelle darf der n x β Wert (Drehzahl x Beugewinkel) der jeweiligen Gelenkgröße nicht überschritten werden. Bitte sprechen Sie uns an.
- Stirnflächen und Zentrierungen der Gelenkwellenflansche und Gegenflansche von Rostschutzmitteln, Schmutz, Fett und Farbe befreien, da sonst eine betriebssichere Verbindung nicht gewährleistet ist.
- Vorsicht beim Umgang mit der Gelenkwelle. Solange Flanschmitnehmer noch frei beweglich sind, besteht **Verletzungsgefahr!**
- Prüfen der Gabelstellung (1) der Gelenkwelle. Pfeilmarkierungen (2) beachten (sie müssen gegenüberliegen!). Profilteile sind verpasst und dürfen nicht vertauscht oder verdreht werden.

Installation/dismantling

Installation

⚠ *In order to guarantee the properties of the cardan shaft as described in the information brochure they must not be altered from its as-delivered state.*

Whenever people or material might be endangered by rotating cardan shafts, the user must take for the relevant safety precautions.

- *Suitable safety devices (e.g. catch bows, solid safety guards) must be provided to prevent the parts of the shaft from being thrown around.* ***Danger to life!***
- *Cardan shafts are elastic and flexural bodies. Their flexural vibration and their critical bending speed must be calculated. The maximum permissible operating speed must be sufficiently below the critical bending speed of the first order.*
- *For the smooth running and safety of the shaft the n x β value (speed x deflection angle) of the relevant shaft size must not be exceeded. Please contact us.*
- *The faces and the centering diameter of the shaft flanges and companion flanges must be free of dust, grease or paint to guarantee a safe connection.*
- *Be careful when handling the cardan shaft. Freely moving flange yokes may cause* ***INJURIES!***
- *Check position of yokes (1) of the shaft. Observe the arrow markings (2). They must be in alignment. The splines are fitted to one another and must not be exchanged or distorted.*

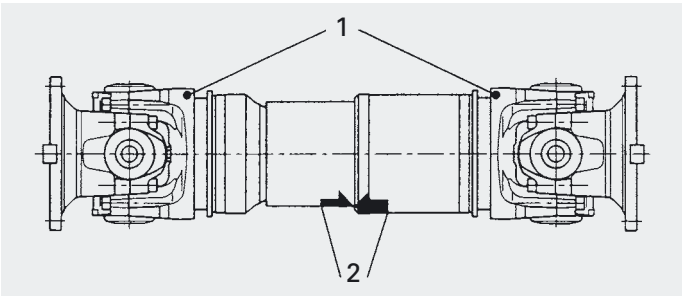

- Eventuell vorhandene Transportsicherung gegen Auseinanderziehen der Gelenkwelle vor Einbau entfernen. Im Zweifelsfall beim Lieferwerk rückfragen.
- Montierte Flansche der Anschlussaggregate auf Rund- und Planlaufabweichung sowie Zentrierpassung kontrollieren (siehe Kapitel Anschlussflansche).
- Gelenkwelle nicht mit Montagehebeln im Gelenk drehen, da die Lagerabdichtungen beschädigt werden und Schmiernippel oder Überdruckventile abbrechen können.
- Schrauben und Muttern mit der vorgeschriebenen Qualität (Festigkeit) verwenden (siehe Flanschverschraubungen).

- *Before installation remove the transport retainer device, if present. In case of doubt please contact the supplier.*
- *Check the axial and radial run-out as well as the spigot fit of the mounted flanges and the connected units (see companion flanges).*
- *Do not turn the joints of the cardan shafts with assembly levers because this may damage the grease nipples or relief valves.*
- *Use nuts and bolts of the prescribed quality (strength) (see flange boltings).*

Einbau und Wartung

- Schrauben und Muttern nur nach Liefervorschrift des Herstellers verwenden.
- Flanschverschraubung mit Drehmomentschlüssel überkreuz gleichmäßig anziehen (siehe Flanschverschraubungen).
- Bei Gelenkwellen **ohne Längsverschiebung** muss ein Anschlusselement **beweglich** ausgeführt sein, um die Gelenkwelle über den Zentrieransatz schieben zu können. Längenänderungen, wie sie z.B. durch Wärmeausdehnung entstehen, müssen durch entsprechende Anschlusslager Berücksichtigung finden.
- Bei Gelenkwellen **mit Längsverschiebung** müssen die Anschlussflansche **fest** auf den Wellen der angeschlossenen Aggregate sitzen.
- Gelenkwellen, die länger als 6 Monate auf Lager gelegen haben, sind vor Inbetriebnahme abzuschmieren (siehe Abschmierung).
- Beim Lackieren der Welle darauf achten, dass der Bereich, in dem die Abdichtung gleitet (Längenausgleich L_a), abgedeckt ist.

- *Only use nuts and bolts in accordance with the supplier's specification.*
- *The bolts should be evenly tightened crosswise with a torque wrench (see flange boltings).*
- *When using cardan shafts* **without length compensation***, one of the connecting units must be* **flexible** *in order to be fitted over the flange pilot. Variations in length which may be caused by temperature changes must be allowed for by a suitable connecting bearing.*
- *If cardan shafts* **with length compensation** *are used, the companion flanges must be firmly* **fitted** *on the shafts of the connected units.*
- *Cardan shafts that have been stored for more than 6 months must be re-lubricated before use (see Maintenance).*
- *For spray-painting the cardan shaft, make sure that the sliding range of the seal (length compensation L_a) is covered.*

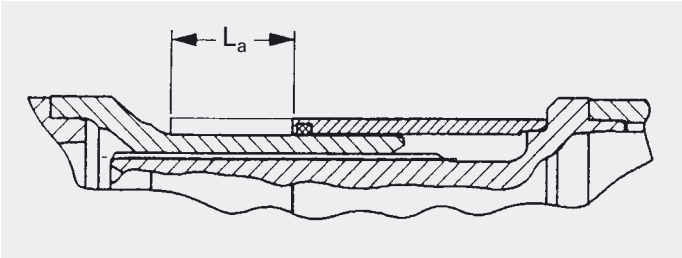

- Für die Farbbehandlung empfehlen wir unsere Lackierstandards (Bitte anfordern).
- Kunststoffbeschichtete Profile (Nabenhülse, Nabenmitnehmer) müssen vor
  – Hitze
  – Lösungsmitteln
  – mechanischen Beschädigungen
  geschützt werden.
- Bei der Reinigung von Gelenkwellen keine aggressiven chemischen Reinigungsmittel verwenden. Bei Reinigung mit Hochdruckreinigern den Druckstrahl nicht direkt auf die Dichtung richten! Dichtungen können beschädigt werden, Schmutz und Wasser können eindringen.
- Gelenkwellen sind für einen Betriebstemperaturbereich von –25°C bis +80°C geeignet (kurzzeitig und nicht häufig bis +120°C). Beim Einsatz von Gelenkwellen in hiervon abweichenden Temperaturbereichen ist in jedem Fall mit uns Kontakt aufzunehmen.

- *For spray-painting the shaft we recommend our paint standards (Please ask for them).*
- *Protect rilsan-coated splines (sleeve muff or sleeve yoke) against*
  – heat
  – solvents
  – mechanical damage.
- *When cleaning cardan shafts, do not use aggressive chemical detergents or pressurized water or steam jets because the seals may be damaged and dirt or water may penetrate.*
- *Cardan shafts can be used in a temperature range between –25°C (–13°F) and +80°C (+176°F), up to +120°C (+248°F) but only for limited periods and not on a frequent basis. Please contact us if the operating temperature deviates from these values.*

Ausbau

- Gelenkwelle vor dem Ausbau gegen Auseinandergleiten der Verschiebung sichern.
- Gelenkwelle vor dem Abziehen vom Anschlussflansch gegen Herunterfallen durch Hochbinden sichern. Beim Abziehen kann der Flanschmitnehmer abkippen. **Verletzungsgefahr!**
- Hinweise für Transport, Lagerung und Einbau beachten.

Disassembly

- *Before disassembly protect the cardan shaft from spline separation.*
- *Secure the cardan shaft against falling down before pulling it off the companion flange. The flange yoke may tilt.* ***Danger of injury!***
- *Observe the directions for transport, storage and installation of cardan shafts.*

Flanschverschraubung

Die Flanschverschraubung kann von uns bezogen werden. Die in den folgenden Tabellen angegebenen Schraubenlängen sind nur dann geeignet, wenn das Maß 2 x G entsprechend der doppelten Flanschplattenstärke G (siehe Maßblätter) nicht überschritten wird. Bei Verwendung von längeren Schrauben muss die gelenkseitige Einführbarkeit der Schrauben geprüft werden.

Wir empfehlen die Verschraubung bestehend aus:

Sechskantschraube mit Kurzgewinde ähnlich DIN 931/10.9 (Schaftlänge größer als Flanschplattenstärke)
Selbstsichernde Mutter, ähnlich DIN 980/934-10.

Die Schrauben lassen sich einbauen
a) teilweise von der Gelenkwelle aus, dabei bietet die Hinterdrehung c am Gelenkwellenflansch keine Anlage gegen Verdrehung;
b) von dem Gegenflansch aus, dazu empfehlen wir die Hinterdrehung c_1 als Schraubenkopf-Anlage und Sicherung auszubilden.

Schraubeneinführbarkeit siehe Tabellen.

Die Schraubverbindung muss mit dem vorgeschriebenen Drehmoment angezogen werden. Die in der Tabelle aufgeführten Anzugsmomente T_a beruhen auf einer 90% (bei hirthverzahnten Verbindungen 80%) Ausnutzung der Streckgrenze und gelten für leicht geölten Zustand der Verschraubung.

Zum Anziehen der Verschraubung dürfen keine MoS_2-Zusätze an Schrauben und Muttern verwendet werden. Bei Verwendung von Schrauben und Muttern mit Korrosionsschutzschichten (z.B. Dacromet 500) bitte Rücksprache halten.

Max. zulässige Streuung nach DIN 25202 Klasse B.

Flange bolting

The flange bolting set can be supplied by GWB on request.
The bolt lengths given in the tables are only suitable if the dimension 2 x G corresponding to the double the flange thickness G is not exceeded (see data sheets). If longer bolts are used, check whether the bolts can still be inserted from the joint side.

We recommended a bolting set consisting of:

***Hexagon bolt** with short thread similar to DIN 931/10.9 (shaft length greater than flange thickness)*
***Self-locking nut**, similar to DIN 980/934-10.*

The bolts allow fitting
a) *partially from the joint side, i.e. the recessed diameter c does not prevent the bolt from turning;*
b) *from the companion flange side. We recommend designing the recessed diameter c_1 so as locate the bolt head.*

See tables for insertion of bolts.

All bolts must be tightened with the specified torque. The tightening torques T_a given in the table are based on a 90% (80% Hirth-serration) utilization of the elastic limit and apply to slightly oiled bolts.

Do not use molycote paste or any other grease on the bolts and nuts. In case of corrosion protected bolts and nuts (e.g. Dacromet 500), please contact us.

Max. permissible tolerance of DIN 25202 class B.

Baureihe/*Series* 587/687/688

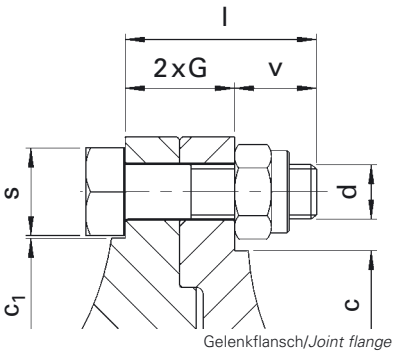

Sechskantschraube:
Kurzausführung ähnlich DIN 931/10.9
Sechskantmutter:
ähnlich DIN 980/10
Selbstsichernd

Hexagon bolt:
short model similar to DIN 931/10.9
Hexagon nut:
similar to DIN 980/10
Self-locking

Gelenkgröße/*Shaft size*		587.50		587.55		587.60
Flansch-∅/*Flange dia.* A	mm	225	250	250	285	285
Ta	Nm	295	405	405	580	580
c	mm	158	176	168	202	202
c_1	mm	171	189	189	214	214
d	–	M 16	M 18	M 18	M 20	M 20
l	mm	50	60	60	64	64
v	mm	20	24	24	24	24
s	mm	24	27	27	30	30
i[1])	–	8	8	8	8	8
Schrauben gelenkseitig einführbar *Bolts inserted from joint side*		ja *yes*	ja *yes*	ja *yes*	ja *yes*	ja *yes*

1) = Zahl der Flanschbohrungen
Ta = Anzugsmoment der Verschraubung
Spezial-Drehmomentschlüssel auf Wunsch lieferbar

1) = *Number of bolt holes*
Ta = *Tightening torque of bolting*
Special torque wrenches supplied on request

Gelenkgröße/*Shaft size*		687/688.15	687/688.20	687/688.25	687/688.30		687/688.35		687/688.40		687/688.45		687/688.55		687/688.65	
Flansch-∅ / *Flange dia.* A	mm	100	120	120	120	150	150	180	150	180	180	225	180	225	180	225
Ta	Nm	35	69	69	69	120	120	190	120	190	190	295	295	295	295	295
c	mm	64	76	76	76	100	100	119	100	119	119	158	118	158	118	158
c_1	mm	69,5	84	84	84	110,3	110,3	132,5	110,3	132,5	132,5	171	130,5	171	130,5	171
d	–	M 8	M 10	M 10	M 10	M 12	M 12	M 14	M 12	M 14	M 14	M 16	M 16	M 16	M 16	M 16
l	mm	23	27	27	27	33	33	40	33	40	40	50	50	50	50	50
v	mm	9	11	11	11	13	13	16	13	16	16	20	22	20	20	20
s	mm	13	17	17	17	19	19	22	19	22	22	24	24	24	24	24
i[1])	–	6	8	8	8	8	8	8	8	8	8	8	10	8	10	8
Schrauben gelenkseitig einführbar	Normal Ausführung *Normal design*	ja *yes*	ja *yes*	ja *yes*	ja *yes*	ja *yes*	ja *yes*	ja *yes*	ja *yes*	ja *yes*	ja *yes*	ja *yes*	ja *yes*	ja *yes*	nein *no*	ja *yes*
Bolts inserted from joint side	Weitwinkel Ausführung *Wide angle design*	–	–	–	–	–	–	–	ja *yes*	ja *yes*	ja *yes*	–	ja *yes*	–	–	–

Baureihe/*Series* 390

Normalverschraubung/*Standard bolting*

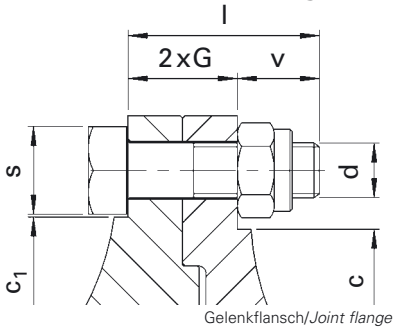

Sechskantschraube: Kurzausführung ähnlich DIN 931/10.9
Sechskantmutter: ähnlich DIN 980/10 Selbstsichernd

Hexagon bolt: *short model similar to DIN 931/10.9*
Hexagon nut: *similar to DIN 980/10 Self-locking*

Gelenkgröße/*Shaft size*		**390.60**	**390.65**	**390.70**	**390.75**	**390.80**
Flansch-∅/*Flange dia.* A	mm	285	315	350	390	435
Ta	Nm	580	780	780	1000	1500
c	mm	202	230	256	295	332
c_1	mm	214	247	277	308	343
d	–	M 20	M 22	M 22	M 24	M 27
l	mm	64	70	75	85	95
v	mm	24	26	25	29	31
s	mm	30	32	32	36	41
i[1])	–	8	8	10	10	10
Schrauben gelenkseitig einführbar *Bolts inserted from joint side*		ja *yes*	ja *yes*	ja *yes*	ja *yes*	ja *yes*

1) = Zahl der Flanschbohrungen
Ta = Anzugsmoment der Verschraubung
Spezial-Drehmomentschlüssel auf Wunsch lieferbar

1) = *Number of bolt holes*
Ta = *Tightening torque of bolting*
Special torque wrenches supplied on request

Baureihe/*Series* 587/390

Spannhülsenverschraubung *Dowel pin connection*

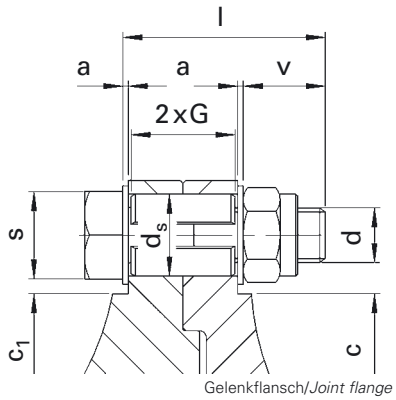

Sechskantschraube: Kurzausführung ähnlich DIN 931/8.8
Sechskantmutter: ähnlich DIN 980/10 Selbstsichernd
Spannhülse: DIN 1481
Scheibe: DIN 7349

Hexagon bolt: *short model similar to DIN 931/8.8*
Hexagon nut: *similar to DIN 980/10 Self-locking*
Dowel pin: *DIN 1481*
Washer: *DIN 7349*

Gelenkgröße/*Shaft size*		**587.50**	**587.55**	**390.60**	**390.65**	**390.70**	**390.75**	**390.80**
Flansch-∅/*Flange dia.* A	mm	250	250	285	315	350	390	435
Ta	Nm	130	130	200	200	280	280	400
c	mm	176	168	202	230	256	295	332
c_1[2])	mm	176	176	198	228	254	294	332
d	–	M 14	M 14	M 16	M 16	M 18	M 18	M 20
l	mm	65	65	75	75	90	95	110
d_s	mm	25	25	28	30	32	32	35
l_s	mm	32	32	36	40	45	50	60
v	mm	17	17	23	19	24	23	30
a	mm	6	6	6	6	8	8	8
s	mm	22	22	24	24	27	27	30
i[1])	–	4	4	4	4	4	4	4
Schrauben gelenkseitig einführbar *Bolts inserted from joint side*		ja *yes*	ja *yes*	ja *yes*	ja *yes*	ja *yes*	ja *yes*	ja *yes*

1) = Zahl der Flanschbohrungen
2) = Spannhülsenverschraubung ohne Verdrehsicherung
Ta = Anzugsmoment der Verschraubung
Spezial-Drehmomentschlüssel auf Wunsch lieferbar

1) = *Number of bolt holes*
2) = *Dowel pin connection without locking*
Ta = *Tightening torque of bolting*
Special torque wrenches supplied on request

Baureihe/*Series* 587/190

Superkurz/*Super short designs*

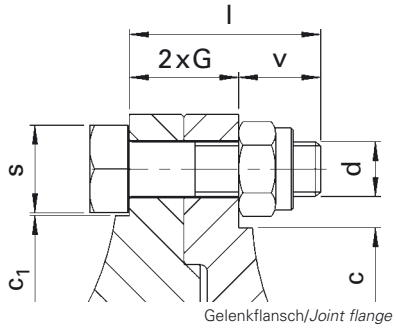

Sechskantschraube: Kurzausführung ähnlich DIN 931/10.9
Sechskantmutter: ähnlich DIN 980/10 Selbstsichernd

Hexagon bolt: *short model similar to DIN 931/10.9*
Hexagon nut: *similar to DIN 980/10 Self-locking*

Gelenkgröße/*Shaft size*		**587.50**	**190.55**	**190.60**	**190.65**	**190.70**
Flansch-∅/*Flange dia.* A	mm	275	305	348	360	405
Ta	Nm	190	295	405	405	580
c	mm	213,5	237,5	274	288	324,5
c_1	mm	225	250	285	299	338
d	–	M 14	M 16	M 18	M 18	M 20
l	mm	50	50	60	60	65
v	mm	15	20	24	24	21
s	mm	22	24	27	27	30
i[1])	–	10	10	10	10	10
Schrauben gelenkseitig einführbar *Bolts inserted from joint side*		ja *yes*	ja *yes*	ja *yes*	ja *yes*	ja *yes*

1) = Zahl der Flanschbohrungen
Ta = Anzugsmoment der Verschraubung
Spezial-Drehmomentschlüssel auf Wunsch lieferbar

1) = *Number of bolt holes*
Ta = *Tightening torque of bolting*
Special torque wrenches supplied on request

Baureihe/*Series* 392/393

Flanschanschluss mit Querkeil/*Flange connection with face key*

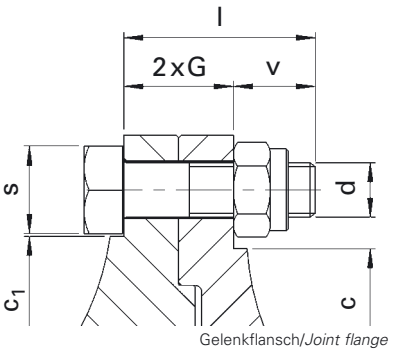

Sechskantschraube:
Kurzausführung ähnlich DIN 931/10.9
Sechskantmutter:
ähnlich DIN 980/10
Selbstsichernd

Hexagon bolt:
short model similar to DIN 931/10.9
Hexagon nut:
similar to DIN 980/10
Self-locking

Gelenkgröße/*Shaft size*		392.50	392.55	392.60	392.65	392.70	393.75	393.80	393.85	393.90
Flansch-∅/*Flange dia.* A	mm	225	250	285	315	350	390	435	480	550
Ta	Nm	295	405	580	780	780	1000	1500	2000	2000
c	mm	152	170	193	224	254	288	320	350	420
c_1	mm	171	190	214	247	277	307	342	377	444
d	–	M 16	M 18	M 20	M 22	M 22	M 24	M 27	M 30	M 30
l	mm	60	75	80	90	100	110	120	130	140
v	mm	20	25	26	26	30	30	36	36	40
s	mm	24	27	30	32	32	36	41	46	46
i[1])	–	8	8	8	10	10	10	16	16	16
Schrauben gelenkseitig einführbar *Bolts inserted from joint side*		nein *no*	nein *no*	nein *no*	nein *no*	nein *no*	nein *no*	nein *no*	nein *no*	nein *no*

1) = Zahl der Flanschbohrungen
Ta = Anzugsmoment der Verschraubung
Spezial-Drehmomentschlüssel
auf Wunsch lieferbar

1) = *Number of bolt holes*
Ta = *Tightening torque of bolting*
Special torque wrenches supplied
on request

Baureihe/*Series* 492/498

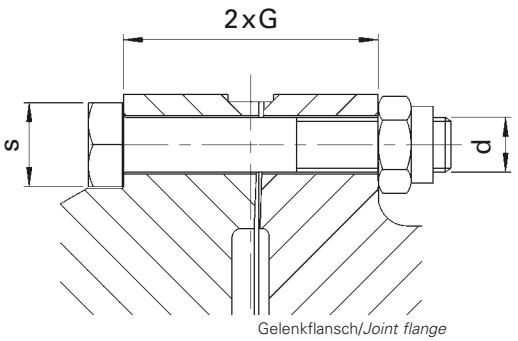

Sechskantschraube:
Kurzausführung ähnlich DIN 931/10.9
Sechskantmutter:
ähnlich DIN 980/934-10
Selbstsichernd

Hexagon bolt:
short model similar to DIN 931/10.9
Hexagon nut:
similar to DIN 980/934-10
Self-locking

Baureihe/*Series* 492

Gelenkgröße/*Shaft size*		492.75	492.80	492.85	492.90
Flansch-∅/*Flange dia.* A	mm	390	435	480	550
Ta	Nm	375	375	525	720
d	–	M 18	M 18	M 20	M 22
s	mm	27	27	30	32
i[1])	–	12	16	16	16
Schrauben gelenkseitig einführbar *Bolts inserted from joint side*		nein *no*	nein *no*	nein *no*	nein *no*

1) = Zahl der Flanschbohrungen
Ta = Anzugsmoment der Verschraubung
Spezial-Drehmomentschlüssel
auf Wunsch lieferbar

1) = *Number of bolt holes*
Ta = *Tightening torque of bolting*
Special torque wrenches supplied
on request

Baureihe/*Series* 498

Gelenkgröße/*Shaft size*		498.00	498.05	498.10	498.15	498.20	498.25	498.30	498.35	498.40	498.45	498.50	498.55	498.60
Flansch-∅/*Flange dia.* A	mm	600	650	700	750	800	850	900	950	1000	1050	1100	1150	1200
Ta	Nm	900	900	900	1800	1800	3150	3150	3150	5400	5400	5400	8200	8200
d	–	M 24	M 24	M 24	M 30	M 30	M 36	M 36	M 36	M 42 x 3	M 42 x 3	M 42 x 3	M 48 x 3	M 48 x 3
s	mm	36	36	36	46	46	55	55	55	65	65	65	75	75
i[1])	–	20	20	24	24	24	24	24	24	20	20	20	20	20
Schrauben gelenkseitig einführbar *Bolts inserted from joint side*		nein *no*	nein *no*	nein *no*	nein *no*	nein *no*	nein *no*	nein *no*	nein *no*	nein *no*	nein *no*	nein *no*	nein *no*	nein *no*

Anschlussflansche

Gelenkwellen werden in der Regel über Anschlussflansche mit den Anschlussaggregaten verbunden. Der Werkstoff der Anschlussflansche muß eine Mindestfestigkeit von 750 N/mm² aufweisen.

Für einen einwandfreien Lauf der Gelenkwellen ist die Einhaltung bestimmter Toleranzen für Planlauf und Rundlauf erforderlich (siehe Tabellen).

Die Abmessungen der Anschlussflansche entsprechen bis auf die Zentriertiefe F_A, der Passung C_A und die für einige Größen vorgesehene Quernuttiefe t_A und Quernutbreite b_A denen der entsprechenden Gelenkwellen. Sie sind den nachstehenden Tabellen zu entnehmen.

Zur besseren Schraubensicherung kann die Hinterdrehung am Anschlussflansch als Schraubenkopf-Anlage ausgebildet und die Schraube vom Anschlussflansch aus eingeführt werden. Dabei ist der Abstand Z_{min} des Flansches vom Gehäuse einzuhalten.

Ist aus Platzgründen usw. diese Lösung nicht durchführbar, empfehlen wir die Verwendung von Stiftschrauben.

Companion flanges

In general, cardan shafts are connected to the driven units by companion flanges. The companion flange material must have a tensile strength of 750 N/mm².

The accurate running of a cardan shaft requires certain tolerances for the axial and radial run-out (see tables).

The dimensions of the companion flanges correspond with those of the same size of cardan shafts, except for the centring depth F_A and the fit C_A, the depth of the keyway t_A and the width b_A. They can be taken from the following tables.

For better bolt locking we recommend designing the relief of the companion flange as a bolt head surface and inserting the bolt from the companion flange side. In this case the distance Z_{min} must be met between the flange and the adjacent housing.

If it is not possible to insert the bolts from the companion flange side, we recommend the use of stud bolts.

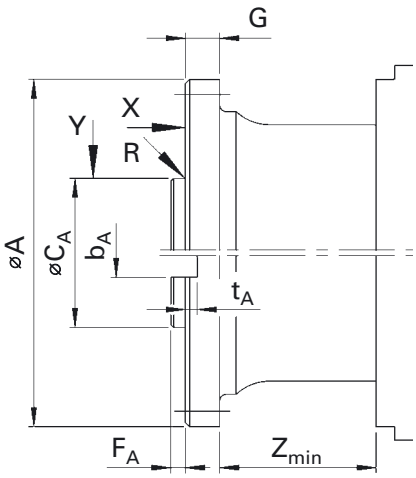

X = Planlaufabweichung
Y = Rundlaufabweichung
Z_{min} = Schraubenlänge (incl. Schraubenkopf)

X = *Axial run-out*
Y = *Radial run-out*
Z_{min} = *bolt length (incl. bolt head)*

Baureihe/*Series* 587

Gelenkgröße/*Shaft size*		587.50		587.55		587.60
A	mm	225	250	250	285	285
F_A	mm	$4_{-0,2}$	$5_{-0,2}$	$5_{-0,2}$	$6_{-0,5}$	$6_{-0,5}$
G	mm	15	18	18	20	20
X und/*and* Y	mm	0,05	0,06	0,06	0,06	0,06
C_A *h6*	mm	140	140	140	175	175

Baureihe/*Series* 687/688

Gelenkgröße/*Shaft size*		687/688.15	687/688.20	687/688.25	687/688.30		687/688.35		687/688.40		687/688.45		687/688.55		687/688.65	
A	mm	100	120	120	120	150	150	180	150	180	180	225	180	225	180	225
F_A	mm	$2,3_{-0,2}$	$2,3_{-0,2}$	$2,3_{-0,2}$	$2,3_{-0,2}$	$2,3_{-0,2}$	$2,3_{-0,2}$	$2,3_{-0,2}$	$2,3_{-0,2}$	$2,3_{-0,2}$	$2,3_{-0,2}$	$4_{-0,2}$	$2,3_{-0,2}$	$4_{-0,2}$	$2,3_{-0,2}$	$4_{-0,2}$
G	mm	7	8	8	8	10	10	12	10	12	12	15	14	15	15	15
X und/*and* Y	mm	0,05	0,05	0,05	0,05	0,05	0,05	0,05	0,05	0,05	0,05	0,05	0,05	0,05	0,05	0,05
C_A *h6*	mm	57	75	75	75	90	90	110	90	110	110	140	110	140	110	140

Baureihe/*Series* 390

Gelenkgröße/*Shaft size*		390.60	390.65	390.70	390.75	390.80
A	mm	285	315	350	390	435
F_A	mm	$6_{-0,5}$	$6_{-0,5}$	$7_{-0,5}$	$7_{-0,5}$	$9_{-0,5}$
G	mm	20	22	25	28	32
X und/*and* Y	mm	0,06	0,06	0,06	0,06	0,06
C_A *h6*	mm	175	175	220	250	280

Baureihe/*Series* 587/190
Superkurz/*Super short designs*

Gelenkgröße/*Shaft size*		587.50	190.55	190.60	190.65	190.70
A	mm	275	305	348	360	405
F_A	mm	$4_{-0,2}$	$5_{-0,3}$	$6_{-0,5}$	$6_{-0,5}$	$7_{-0,5}$
G	mm	15	15	18	18	22
X und/*and* Y	mm	0,06	0,06	0,06	0,06	0,06
C_A *h6*	mm	140	140	175	175	220

Baureihe/*Series* 392/393

Gelenkgröße/*Shaft size*		392.50	392.55	392.60	392.65	392.70	393.75	393.80	393.85	393.90
A	mm	225	250	285	315	350	390	435	480	550
F_A	mm	$4,5_{-0,5}$	$5_{-0,5}$	$6_{-0,5}$	$7_{-0,5}$	$7_{-0,5}$	$7_{-0,5}$	$9_{-0,5}$	$11_{-0,5}$	$11_{-0,5}$
G	mm	20	25	27	32	35	40	42	47	50
X und/*and* Y	mm	0,06	0,06	0,06	0,06	0,06	0,06	0,06	0,06	0,06
C_A *f8*	mm	105	105	125	130	155	170	190	205	250
b_A *K8*	mm	32	40	40	40	50	70	80	90	100
t_A *+0,2 mm*	mm	9	12,5	15	15	16	18	20	22,5	22,5

Wartung

Wartungsfristen

Der Einsatz von Gelenkwellen in industriellen Anlagen ist vielseitig, wobei sehr unterschiedliche Betriebsbedingungen zu berücksichtigen sind.

Wir empfehlen, Kontrollarbeiten in regelmäßigen Zeit- oder Leistungsabständen durchzuführen und wenn möglich mit Arbeiten an anderen Maschinenteilen zu koordinieren, mindestens jedoch einmal im Jahr.

Kontrollarbeiten

- Flansch-Verschraubung auf festen Sitz prüfen und mit vorgeschriebenem Anzugsmoment nachziehen (siehe Flanschverschraubungen).
- Spielprüfung. Durch Anheben der Gelenke und der Längsverschiebung prüfen, ob es in diesen Bereichen sichtbares oder fühlbares Spiel vorhanden ist.

Darüber hinaus muss bei jeglichem Auftreten von außergewöhnlichen Geräuschen, Vibrationen oder nicht normalem Verhalten der Gelenkwelle die Ursache überprüft und behoben werden.

Abschmierung

GWB-Gelenkwellen werden einbaufertig, mit Fett abgeschmiert, geliefert.

- Für das Nachschmieren der Gelenkwellen sind Standardfette nach STD 4006-000 wie z.B. Lithiumkomplex Fett Shell-Retinax LX mit der Kennzeichnung KP2N-20 nach DIN 51502, einem Schmierfett nach DIN 51818 zu verwenden.
  Keine Schmierfette mit MoS_2-Zusätzen einsetzen!
- Schmiernippel sind vor dem Nachschmieren zu säubern.
- Beim Nachschmieren darf der Schmierstoff nicht mit hohem Druck oder harten Schmierstößen eingepresst werden.
  Max. zulässiger Schmierdruck 15 bar (15×10^5 Pa).
- Gelenkwellen, die länger als 6 Monate gelagert wurden, müssen vor Inbetriebnahme abgeschmiert werden.
- Bei der Reinigung von Gelenkwellen keine aggressiven chemischen Reinigungsmittel verwenden. Bei Reinigung mit Hochdruckreinigern den Druckstrahl nicht direkt auf die Dichtung richten! Dichtungen können beschädigt werden, Schmutz und Wasser können eindringen. Nach einer Reinigung muss in jedem Fall ein Nachschmieren erfolgen, bis das Fett an den Dichtungen austritt.

Zapfenkreuzgarnituren

Zapfenkreuzgarnituren sind über einen zentral am Zapfenkreuz oder auf dem Büchsenboden angeordneten Kegelschmiernippel nach DIN 71412 nachzuschmieren.

Maintenance

Maintenance intervals

Cardan shafts are used in a great variety of industrial plants with very different operating conditions.

We recommend inspections at regular intervals and, if possible, to coordinate them with maintenance work on other parts of the equipment. However maintenance work should be carried out once a year at least.

Inspection

- *Check the flange bolts for tightness and retighten them with the prescribed torque (see flange boltings).*
- *Backlash inspection. By lifting the joints and the length compensation check the visible or tangible backlash.*

Check the cardan shaft for any unusual noise, vibration or abnormal behaviour and repair the damage, if any.

Lubrication

GWB cardan shafts are lubricated with grease and ready for installation.

- *For the re-lubrication of cardan shafts use a standard grease acc. to STD 4006-000 as for example a lithium-complex grease of the following specification only: KP2N-20 / DIN 51502 acc. to DIN 51818.*
  Do not use grease with molycote additives!
- *Clean the grease nipples before re-lubricating.*
- *Do not grease with too high a pressure or with hard jerks. Max. permissible lubricating pressure 15 bar (15×10^5 Pa).*
- *Cardan shafts that have been stored for more than 6 months must be re-greased before use.*
- *When cleaning cardan shafts, do not use aggressive chemical detergents or pressurized water or steam jets because the seals may be damaged and dirt or water may penetrate. After a cleaning the cardan shaft must be re-greased until the grease escapes out from the seals.*

Journal cross assemblies

The journal cross assemblies may be re-lubricated via a conical grease nipple (DIN 71412) located in the middle of the cross or at the bottom of the bush.

Zentralabschmierung
Central lubrication

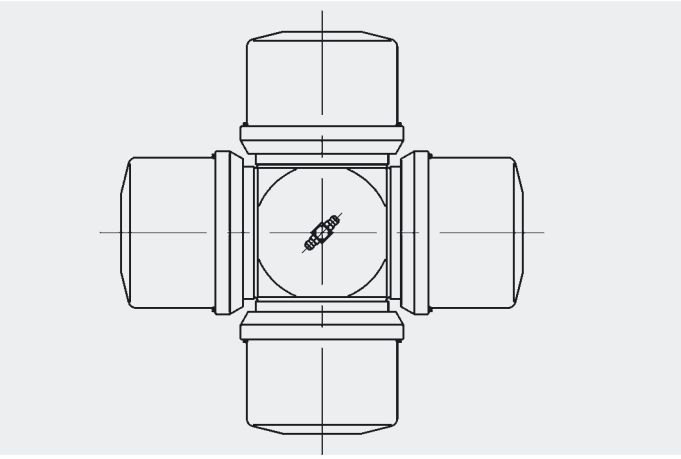

Die Dichtungen der Zapfenkreuzlagerungen müssen durchgeschmiert werden. Beim Nachschmieren ist so lange Fett einzubringen, bis es an den Dichtungen der Lager austritt.

Das Abschmieren der Baureihe 498 (in Sonderfällen auch bei den Baureihen 390, 392, 393, 492) ist über Flachschmiernippel nach DIN 3404 durchzuführen. Das dargestellte Hilfsschmierrohr ist als Adapter zwischen Kegelschmiernippel (nach DIN 71412) an der Gelenkwelle und Flachschmiernippelanschluss an der Fettpresse zu verwenden (siehe Bild)

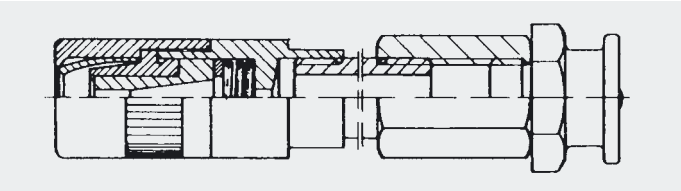

Büchsenbodenabschmierung
4 point lubrication

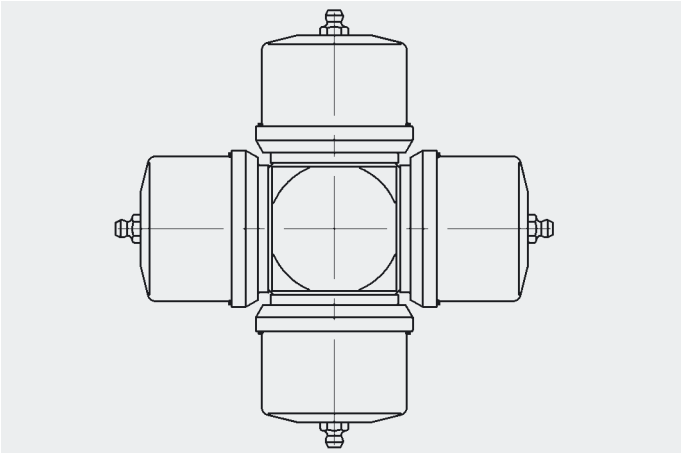

The seals of the journal cross bearings must be lubricated until the grease passes through from the seals of the bearings.

Cardan shafts of the series 498 (in special cases also the series 390, 392, 393, 492) must be lubricated via a flat grease nipple according to DIN 3404. The illustrated adapter pipe can be used as adapter between a conical grease nipple at the cardan shaft (acc. to DIN 71412) and a flat grease nipple connection at the grease pump (see illustration).

Bestell-Nr.:	86 05 006 (90 mm lang) 86 05 025 (300 mm lang)
Order No.:	*86 05 006 (90 mm length)* *86 05 025 (300 mm length)*

Längsverschiebung

Die Längsverschiebungen der Baureihe 687/688 sind in der Standardversion wartungsfrei. Die Abschmierung der Baureihen 390, 392, 393, 492, 190 und 587, sowie Sonderausführungen der Baureihe 687/688, erfolgt im Regelfall über ein kombiniertes Abschmier- und Entlüftungsventil mit Kegelschmiernippel nach DIN 71412 (ohne Dichtkugel im Schmiernippel).

Die Abschmierung bei der Baureihe 498 geschieht über Flachschmiernippel nach DIN 3404.

- Abschmier- und Entlüftungsventile dürfen nicht entfernt oder durch Standard-Schmiernippel ersetzt werden.
- Abdeckkappen der Schmiernippel müssen vor Inbetriebnahme unbedingt entfernt werden.
- Das Nachschmieren sollte bei zusammengeschobener Länge L_z oder kürzester Betriebsstellung vorgenommen werden.

Length compensation

The length compensation of the standard version of the series 687/688 is maintenance-free. The length compensation of the series 390, 392, 393, 492, 190 and 587 as well as special designs of the series 687/688 is lubricated via a combined grease and air-relief valve with a conical grease nipple according to DIN 71412 (no self-locking grease nipple).

The length compensation of the series 498 is lubricated via a flat grease nipple according to DIN 3404.

- *Grease and air-relief valves must not be removed or replaced by standard grease nipples.*
- *Protection caps should be removed from the grease nipples before operation.*
- *Re-lubricating should be done at the shortest compressed length L_z of the shaft.*

Empfohlene Nachschmierfristen

Für Gelenkwellen werden folgende Nachschmier- bzw. Kontrollzeiträume empfohlen (siehe Tabelle):

Recommended re-greasing intervals

We recommend the following inspection and re-greasing intervals.

Baureihe *Series*	Nachschmierintervalle / *Re-greasing intervals*	
	Gelenke / *Joints*	Verschiebung / *Length compensation*
587	6 Monate/*months*	6 Monate/*months* 1)
687/688	6 Monate/*months*	wartungsfrei/*maintenance-free* 12 Monate/*months* 1)
190	6 Monate/*months*	6 Monate/*months*
390	6 Monate/*months*	6 Monate/*months*
392/393	6 Monate/*months*	6 Monate/*months*
492/498	3 Monate/*months*	3 Monate/*months*

1) bei abschmierbarer Profilverschiebung

1) *for greasable length compensation*

- Ungünstige Einflüsse wie Temperatur, Schmutz, Wasser u. a. können kürzere Schmierperioden erforderlich machen. Grundsätzlich empfehlen wir, die Schmierintervalle den jeweiligen Betriebsbedingungen anzupassen.
- Für Gelenkwellen mit kunststoffbeschichteter Profilverschiebung (auf Kundenwunsch) können die Nachschmierintervalle, in Abhängigkeit vom Anwendungsfall, auf 12 Monate verlängert werden.

- *Unfavourable effects like temperature, dirt and water may necessitate shorter lubricating intervals. Principally we recommend adapting the lubricating intervals to the individual operating conditions.*
- *For cardan shafts with plastic-coated splines (on request) the re-lubricating intervals may be extended, dependent on the application, to 12 months.*

Instandsetzung

Aus Sicherheitsgründen sollten Gelenkwellen nur von GWB oder GWB-zugelassenen Reparaturwerkstätten instandgesetzt werden.

Die Instandsetzung von Gelenkwellen wird durch unseren Gelenkwellenservice fachmännisch durchgeführt. Hier erfolgt die Überholung der Wellen unter Verwendung von Originalersatzteilen. Eine Instandsetzung von Gelenkwellen durch den Kunden ist nur für den Notfall in Erwägung zu ziehen und für Anlagen gültig, in denen Gelenkwellen mit Drehzahlen unter 500 min^{-1} laufen. Bei Drehzahlen über 500 min^{-1} müssen die Gelenkwellen ausgewuchtet werden.

⚠ Beim Austausch von Zapfenkreuzgarnituren empfehlen wir, die Lagerdeckelschrauben bei den Baureihen mit geteilten Lageraugen ebenfalls auszutauschen. Beachten Sie hierbei unsere Montage- und Instandsetzungsvorschriften. Bitte sprechen Sie uns an.

Repair

For safety reasons, cardan shafts should only be repaired by GWB or by GWB-approved repair shops.

The repair of cardan shafts is carried in a professional manner by our cardan shaft service experts. The shafts are overhauled using original spare parts. The repair of cardan shafts by the user should only be made in emergency cases and only for such equipment where the operating speed of the shaft does not exceed 500 rpm. If the speed exceeds 500 rpm, the cardan shaft must be rebalanced.

⚠ *If journal cross assemblies are to be replaced, we also recommend replacing the bearing cap screws of shafts of the series with split yokes. Observe our installation and repair instructions. Please contact us.*

Umweltschutz

Ein besonderes Augenmerk unseres Umweltschutzmanagement widmet sich der Produktverantwortung. Daher wird die Umweltauswirkung von Gelenkwellen besonders beobachtet. So werden unsere Gelenkwellen mit bleifreien Fetten abgeschmiert; ihre Lackierungen sind lösemittelarm und schwermetallfrei; sie sind reparaturfreundlich und können nach dem Nutzungsende dem Wertstoffkreislauf wieder zugeführt werden.

Environmental Protection

A particular feature of our environmental protection management is dedication to product responsibility. As a result the effect of driveshafts on the environment is given particular attention. Thus our driveshafts are lubricated with lead-free grease, their paint finishes are low in solvents and free of heavy metals, they are easy to maintain and after use can be re-introduced into the re-cycling process.

Hinweise zur Auslegung, abweichend von den allgemeinen Richtlinien

Gelenkwellen in Schienenfahrzeugen

Die Auslegung der Sekundärwellen in Schienenfahrzeugen hat zusätzlich nach dem zu übertragenden Höchstdrehmoment aufgrund der Haftung zwischen Rad und Schiene (Adhäsionswert) zu erfolgen.

Gelenkwellen in Kranantrieben

Die für Fahrantriebe von Krananlagen zutreffenden besonderen Betriebsbedingungen wurden bei der Erstellung der DIN 15 450 berücksichtigt. Für derartige Antriebe soll deshalb die Auswahl der Gelenkwelle nach dieser Norm erfolgen.

Gelenkwellen in Schiffsantrieben

Bei abnahmepflichtigen Gelenkwellen sind die Richtlinien der jeweiligen Abnahme-Gesellschaften zu berücksichtigen.

Gelenkwellen in sonstigen Anlagen zur Personenbeförderung

Bei Anwendung von Gelenkwellen zum Beispiel in Fahrgeschäften, Liften, Seilbahnen, Aufzügen, Schienenfahrzeugen usw. sind die Vorschriften bzw. Normen von Aufsichtsbehörden und Genehmigungsbehörden zu beachten.

Auswahl von Gelenkwellen

**Die Wahl einer Gelenkwelle wird nicht allein durch das max. zulässige Drehmoment der Gelenkwelle und die vorhandenen Anschlüsse bestimmt.
Sie ist ebenfalls abhängig von einer Vielzahl von Einflußgrößen. Richtlinien zur exakten Bestimmung (siehe Kapitel Auswahl von Gelenkwellen).**

Unsere Projektingenieure beraten Sie und übernehmen für Sie die Wahl der richtigen Gelenkgröße unter Verwendung computergesteuerter Rechenprogramme.

Dazu benötigen wir von Ihnen folgende Daten:

- **Einbaulänge der Gelenkwelle**
- **Winkelverhältnisse**
- **erforderliche Verschiebung**
- **max. Gelenkwellen-Drehzahl**
- **Abmessungen der Anschlüsse**
- **max. Drehmoment auf die Gelenkwelle**
- **Nenndrehmoment auf die Gelenkwelle**
- **Lastkollektiv**
- **Beschreibung der Anlage mit Einsatzbedingungen und Umgebungseinflüssen**

Selection procedures for specific applications

Cardan shafts in railways transmissions

The selection of cardan shafts in the secondary system of rail vehicles must be based on the maximum torque that can be transmitted to the track (wheel slip or adhesion torque).

Cardan shafts in crane travel drives

The particular operating conditions for travel drives of cranes have been taken into consideration in the DIN-standard 15 450. Therefore, cardan shafts of those applications can be selected by using this standard.

Cardan shafts in marine transmissions

Those cardan shafts are subject to acceptance and must correspond to the standards on the respective classification society.

Cardan shafts for other forms of passenger conveyance

Cardan shafts used in amusement park equipments, ski lifts or similar lift systems, elevators and rail vehicles must be in accordance with the standards and specifications of the licence and supervisory authority.

Selection of cardan shafts

The selection of a cardan shaft is not only determined by the maximum permissible torque of the shaft and the connections. It also depends on a variety of other factors. For the exact determination and selection of cardan shafts (see selection of cardan shafts).

Our engineers will be pleased to advise you on the selection of the right size of the shaft and joint by applying computer programmes.

For this purpose we require the following data from you:

- ***Installation length of the cardan shaft***
- ***max. joint angle requirement***
- ***the required length compensation***
- ***the maximum rotation speed of the shaft***
- ***the shaft end connection details***
- ***the maximum torque to be transmitted***
- ***the nominal torque to be transmitted***
- ***the load occurrences***
- ***description of the equipment and the working conditions***

Spicer Gelenkwellenbau GmbH & Co. KG, E-Mail: industrial@gwb-essen.de, Internet: http://www.gwb-essen.de
P. O. Box 101362 – D-45013 Essen, 2. Schnieringstr. 49 – D-45329 Essen, Telefon: 0049 (0)201 / 8124-0

Inland / *Home Country*

GKN Service International GmbH
Service-Center Hamburg
D-22525 Hamburg
Ottensener Str. 150
Tel. 0 40-54 00 90-0
Fax 0 40-54 00 90-43

Ausland / *Foreign Country*

Australien/*Australia*
Hardy Spicer Division of Unidrive Pty. Ltd.
45-49 McNaughton Road
Clayton, Victoria 3168
Tel. 0061-395424100
Fax 0061-395448117
E-Mail: rplowman@hardyspicer.com.au

Belgien/*Belgium*
N.V. Glaenzer Seurre S.A.
Av. Paul Gilsonlaan 441
B-1620 Drogenbos
Tel. 0032-2-3711830
Fax 0032-2-3711826
E-Mail: glsindustrie@amo.add.gknplc.com

Brasilien/*Brazil*
Dana Industrial Ltda.
Av. Fukuichi Nakata,
451/539 - Piraporinha - Diadema
Sao Paulo – 09950-400
Tel. 0055-11-40755700
Fax 0055-11-40755875
E-Mail: fabricio.santos@dana.com

China/*R.O.C.*
Wuxi Driveshafts & Machinery, Co.
88 W. Renmin Road, Hudai, Wuxi
Jiangsu Province, China 214161
Tel. 0086-510-559-1729
Fax 0086-510-559-8853
E-Mail: office@bcwxz.com
Internet: http://www.bcwxz.com

Dänemark/*Denmark*
Dansk Uni-Cardan A/S
Baltorpbakken 10
DK-2750 Ballerup
Tel. 0045-44866844
Fax 0045-44688822
E-Mail: info@uni-cardan.dk
Internet: http://www.uni-cardan.dk

Finnland/*Finland*
Oy Unilink AB
Lapinrinne 1
FIN-00180 Helsinki-Helsingfors
Tel. 00358-9-6866170
Fax 00358-9-6940449
E-Mail: UNILINK@unilink.fi

Frankreich/*France*
GKN Glenco
170, rue Léonard de Vinci
F-78955 Carrières sous Poissy
Tel. 0033-1-30068431
Fax 0033-1-30068439
E-Mail: industrie@gknglenco.com

Griechenland/*Greece*
Sokrates Mechanics GmbH
9, Victoria Square
GR-10434 Athen
P. O. Box 3020
GR-10210 Athen
Tel. 0030-1-8233403
Fax 0030-1-8224784
E-Mail: sokrates@enternet.gr
Internet: http://www.enternet.gr/sokrates
Hellas Cardan GmbH
P. O. Box 40105, 56430 Stawrupolis
GR-56410 Thessaloniki
Tel./Fax 0030-31-682806

Großbritannien/*Great Britain*
GKN Driveline Ltd.
Higher Wood Croft, Leek
GB-Staffordshire ST13 5QF
Tel. 0044-1538-384278
Fax 0044-1538-371265

Indien/*India*
XLO India Ltd.
78-B, Dr. Annie Besant Road
Worli, Mumbai 400018
Tel. 0091-22-4937451
Fax 0091-22-4934925
E-Mail: exloin@vsnl.com

Israel/*Israel*
Frank Agencies
P. O. Box 22307, 10 Pinkas Str.
62661 Tel Aviv
Tel. 00972-3-5441941
Fax 00972-3-5441438
E-Mail: frank-ag@frank.co.il

Italien/*Italy*
Uni-Cardan Italia S.p.A.
Via G. Ferraris 125
I-20021 Ospiate di Bollate (MI)
Tel. 0039-02-383381
Fax 0039-02-38302122
E-Mail: info@unicardanitalia.it

Japan/*Japan*
Nakamura Jico Co. Ltd.
10-10, Tsukiji, 3-chome
Chuo-Ku, Tokyo
Tel. 0081-3-3543-9772
Fax 0081-3-3543-9779

Niederlande/*Netherlands*
UNI-CARDAN Nederland B.V.
Haarlemmer Straatweg 155-157
NL-1165 MK Halfweg
Tel. 0031-20-4070207
Fax 0031-20-4070227
E-Mail: industrie@uni-cardan.nl

Norwegen/*Norway*
UNI-CARDAN NORGE A. S.
Postboks 66, Grefsen
N-0409 Oslo
Tel. 0047-22098800
Fax 0047-22098809
E-Mail: rk@gkn-unicardan.no

Österreich/*Austria*
GKN Service Austria GmbH
Slamastrasse 32
Postfach 53
A-1232 Wien
Tel. 0043-1-6163880
Fax 0043-1-6163828
E-Mail: gkn.austria@mail.gkngsa.co.at
Internet: http://www.gkngsa.co.at

Auch zuständig für/*Also responsible for:*
Tchechien, Slowakei, Slowenien, Kroatien, Ukraine, Rumänien, Bulgarien, Jugoslawien

Schweden/*Sweden*
Svenska Uni-Cardan AB
Stensätravägen 9
Box 3100
S-12703 Skärholmen
Tel. 0046-86039700
Fax 0046-86039701
E-Mail: info@unicardan.se
Internet: http://www.unicardan.se

Schweiz/*Switzerland*
Schaffner – Behrend GmbH
Althardstrasse 141
CH-8105 Regensdorf
Tel. 0041-1-871-60 70
Fax 0041-1-871-60 80
E-Mail: schaffner-behrend@amo.gknplc.com

Spanien/*Spain*
Gelenk Industrial S.A.
Balmes, 152
E-08008 Barcelona
Tel. 00349-3-2374245
Fax 00349-3-2372580
E-Mail: gelenk1@infonegocio.com

Süd-Afrika/*South Africa*
MIDAS Limeted (TMI Propshafts)
294 Brickfield Road
Meadowdale
Germiston 1401
Tel. 0027-11 879 6 322
Fax 0027-11 454 0 380
E-Mail: rnaidoo@midas.co.za

Ungarn/*Hungary*
Szücs Co. Kárdantech KFT
Ipari kepriselelek
Aradi Vertanuk ut. 16
H-9022 Györ
Tel. 0036-96-518 930
Fax 0036-96-518 931
E-Mail: szucsco@alarmix.ne

USA, Kanada/*USA, Canada*
Spicer GWB North America
Merovan Business Center
1200 Woodruff Road
Suite A-5
Greenville S.C. 29607
Tel. 001-864-987-0281
Fax 001-864-987-0295

SPICER GELENKWELLENBAU

Spicer Gelenkwellenbau GmbH & Co. KG
2. Schnieringstr. 49
45329 Essen/Germany

Telefon 00 49 (0) 2 01 – 81 24-0
Telefax 00 49 (0) 2 01 – 81 24-6 52
Internet: www.gwb-essen.de

Einbau und Wartung

für Gelenkwellen / Industrie-Anwendungen

Installation and Maintenance

for Cardan Shafts / Industrial Applications

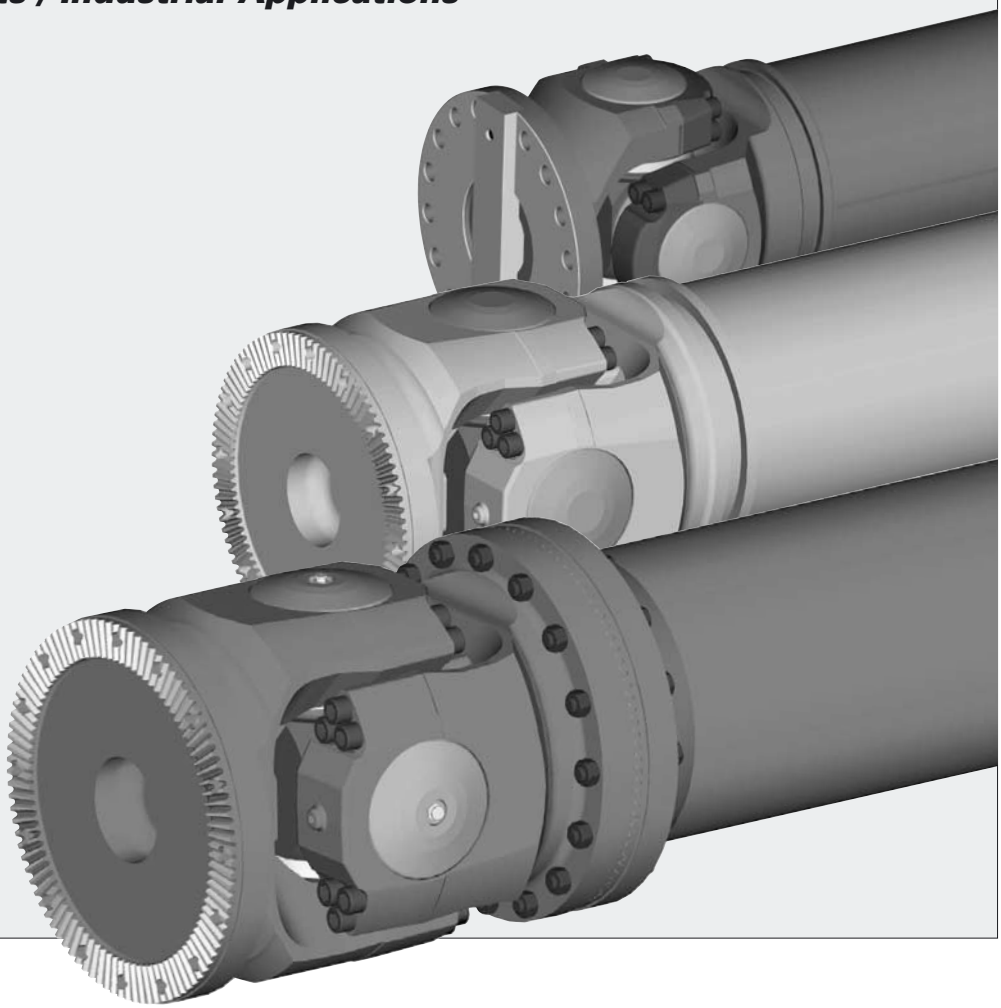

Betriebsanleitung

Operating instructions

Projekt Project	**SHARGH CEMENT**
Besteller Customer	**F.L. SMIDTH A/S**
Flender Auftrags-Nr. Flender order no.	**4.190.294-80-140**

FLENDER

A. Friedr. Flender AG · D 46393 Bocholt · Tel. 02871/92-0 · Telefax 02871/92-2596 · http://www.flender.com

Contents

1. Technical data — **TD 4.190.294-80-140 EN** Rev.
- Technical data

2. General notes — **BA 73 00 02 0000 EN** Rev.
- Introduction
- General scope of application
- Use as specified
- Copyright

3. Safety notes — **BA 73 00 03 0034 EN** Rev.
- Safety notes

4. Handling and storage — **BA 92 04 04 0028 EN** Rev. a
- Scope of supply
- Handling and storage
- Standard corrosion protection

5. Technical description — **BA 92 04 05 0033 EN** Rev.
- General remarks
- Design and function

6. Assembly — **BA 92 04 06 0031 EN** Rev. a
- General information on installation
- Foundation
- Description of installation operations
- Gear Unit with Oil Supply System
- Assembling the couplings

7. Start-up — **BA 92 04 07 0030 EN** Rev.
- Procedure before start-up
- Charging with lubricant
- Start-up
- Removal from service

8. Operation — **BA 92 04 08 0024 EN** Rev.
- General operating data
- Modes of rotary furnace operation

9. Faults, causes and remedy — **BA 92 04 09 0014 EN** Rev. c
- General information on malfunctions
- Possible causes

10. Maintenance and repair — **BA 92 04 10 0030 EN** Rev.
- General information on maintenance
- Description of maintenance and repairs
- Lubricants

11. Spare parts, service facitily addresses — **BA 73 00 11 0000 EN** Rev. a
- Spare parts stock
- Addresses of replacement part suppliers and service organizations

Diese technische Unterlage hat gesetzlichen Schutz (DIN 34)

12. Appendix

AH 4.190.294-80-140 EN Rev.

- Lubricants
- Service facility addresses
- Declaration by the manufacturer
- Drawings
- Spare parts list
- List of equipment

Diese technische Unterlage hat gesetzlichen Schutz (DIN 34)

Contents

1. Introduction 2

2. General scope of application 2

3. Use as specified 2

4. Copyright 2

Diese technische Unterlage hat gesetzlichen Schutz (DIN 34)

1. Introduction

The Operating Instructions must be read, understood in all respects and observed by those persons who are responsible for use of the FLENDER product.

Only familiarization with the Operating Instructions will prevent malfunction of the product and ensure trouble-free operation. It is important therefore that the persons actually responsible should be familiar with theses Operating Instructions.

Careful study of these Operating Instructions before handling our product and before startup is essential, as we accept no liability for damage and malfunctions resulting from non-compliance of these Operating Instructions.

Note: We reserve the right to amend these these Operating Instructions where rendered necessary by improvement of the products.

2. General scope of application

The product is intended for the scope of application as specified in the Technical Data.

3. Use as specified

The product is designed only for the scope of application specified in the Technical Data.

Before the product is used outside the scope of use as specified by the contract, this must be agreed with FLENDER, as otherwise the warranty will be invalidated.

4. Copyright

Copyright of these Operating Instructions remains the property of FLENDER AG.

These Operating Instructions are intended for the installation, operating and supervisory personnel. They may not be duplicated in whole or in part or used without authorization for the purpose of competition or communicated to others.

FLENDER AG

D-46393 Bocholt
Germany

Phone: 02871/92-0
Fax: 02871/92-2596

Diese technische Unterlage hat gesetzlichen Schutz (DIN 34)

Contents

1. Safety notes 2
1.1 Notes and symbols in the Operating Instructions 3
1.2 Modes of operation 3
1.2.1 Blocking brake 3
1.2.2 Avoidance of excessive speed 3
1.2.3 Centrifugal brake 3
1.2.4 Normal operation with the main motor 3
1.2.5 Operation with the auxiliary drive 4
1.2.5.1 Starting clutch (for slow running) 4
1.2.5.2 Auxiliary drive for slow running (e.g. during the cooling down phase/warming up phase) 4
1.2.5.3 Maintenance operation (e.g. for lining work) 5
1.2.6 Emergency stop 5
1.2.6.1 Emergency stop during normal operation with the main motor 5
1.2.6.2 Emergency stop operation with the auxiliary drive 5

Diese technische Unterlage hat gesetzlichen Schutz (DIN 34)

1. Safety notes

- The gear unit has been manufactured in accordance with the state of the art and is delivered in a condition for safe and reliable use. Any changes on the part of the user which may affect safety and reliability are prohibited. This applies equally to safety features designed to prevent accidental contact.
- The gear unit should be used and operated only within the context of the conditions laid down in the contract governing performance and supply.
- The operator must ensure that all persons involved in installation, operation, maintenance and repair have read and understood these Operating Instructions (BA) and comply with them at all times in order to:

  – avoid injury or damage,

  – ensure the safety and reliability of the unit,

  and

  – avoid disruptions and environmental damage through incorrect use.
- During transport, assembly, installation, dismantling, operation and maintenance of the unit, the relevant safety and environmental regulations must be complied with at all times.
- The gear unit should be operated, maintained or repaired by authorised, trained and qualified personnel.
- The gear unit must not be cleaned using high-pressure cleaning equipment.
- All work must be carried out with great care and with due regard to safety.
- All work on the gear unit must be carried out only when it is not in operation.
  The drive unit must be secured against being switched on accidentally (e.g. by locking the key switch or removing the fuses from the power supply). A notice should be attached to the start switch stating clearly that work is in progress.
- During oil changes the old oil should be collected in a suitable receptacle. Any pools of oil which may have collected should be removed at once with an oil binding agent.
  Very dirty and oil-soaked cleaning rags should be kept in suitable containers.
  The old oil, the oil binding agent and the cleaning rags should be disposed of in accordance with the relevant environmental protection regulations.
- If any changes are noticed during operation (e.g. overheating or unusual noises), the drive assembly must be switched off immediately.
- Rotating drive components such as couplings, gearwheels, belt drives etc. must be protected against accidental contact.
- If the gear unit is intended for installation in plant or machinery, the manufacturer of such plant or machinery must ensure that the contents of these Instructions are incorporated in his own instructions.
- Notices attached to the gear unit, e.g. rating plate, direction arrows etc. must always be observed. They must be kept free from dirt and paint at all times. Missing plates must be replaced.

Diese technische Unterlage hat gesetzlichen Schutz (DIN 34)

1.1 Notes and symbols in the Operating Instructions

Instructions in the Operating Instructions which concern operating safety are emphasized as follows:

⚠ This symbol indicates safety measures which must be observed to avoid **personal injury.**

Caution! This symbol indicates safety measures which must be observed to avoid **damage to the gear unit.**

Note: This note draws attention to general **operating notes** which should be specially observed.

1.2 Modes of operation

1.2.1 Blocking brake

The brake on the input shaft of the auxiliary gear unit is designed as a **blocking brake**. Braking during run back may result in irreparable damage to the overrunning clutch. Braking at the reversing point (reversing the direction of rotation of the rotary furnace) is permitted.

1.2.2 Avoidance of excessive speed

To avoid excessive speed if the overrunning clutch should fail, for safety reasons the blocking brake must be closed when the main motor is running.

The drive must be interlocked accordingly.

1.2.3 Centrifugal brake

When the blocking brake is released, an add-on centrifugal brake automatically provides soft braking during oscillation.

Caution! **The centrifugal brake has an important safety function as a protection against excessive speeds. It must therefore be inspected twice yearly in accordance with the inspection and maintenance regulations.**

1.2.4 Normal operation with the main motor

After the main motor is switched off, the rotary furnace will try to rotate back to its centre-of-gravity position. Due to the reversal of the direction of rotation the overrunning clutch of the auxiliary gear unit acts. If the blocking brake is closed, it prevents the rotary furnace from rotating back. If the blocking brake is open, the centrifugal brake prevents the entire auxiliary drive from running at dangerous excessive speeds during the run-back operation.

Caution! **The centrifugal brake has an important safety function as a protection against excessive speeds. It must therefore be inspected twice yearly in accordance with the inspection and maintenance regulations.**

⚠ **The auxiliary drive may break apart violently as a result of a excessive speed. Ensure that the centrifugal brake always operates faultlessly.**

Diese technische Unterlage hat gesetzlichen Schutz (DIN 34)

Caution! **Starting the main motor while the rotary furnace is moving back will irreparably damage the drive.**

Caution! **The rotary furnace drive must be interlocked so that only the main motor or the auxiliary motor can be started simultaneously. If the main motor and auxiliary motor are started simultaneously, parts of the drive unit may be irreparably damaged. A so-called ”flying start”, i.e. starting with the auxiliary drive first, then engaging the main drive and disengaging the auxiliary drive, is possible.**

In the case of dual drives the main motors must always be started simultaneously on both drive trains.

The blocking brake must be closed when the auxiliary motor is shut off and the main motor is running.

1.2.5 Operation with the auxiliary drive

A separate auxiliary drive is provided for slow running and maintenance work.

Caution! **The rotary furnace drive must be interlocked so that only the main motor or the auxiliary motor can be started simultaneously. If the main motor and auxiliary motor are started simultaneously, parts of the drive unit may be irreparably damaged. A so-called ”flying start”, i.e. starting with the auxiliary drive first, then engaging the main drive and disengaging the auxiliary drive, is possible.**

1.2.5.1 Starting clutch (for slow running)

The hydrodynamic starting clutch is protected against excessive operating temperatures by an electric warning device. When the set temperature is reached, the start of the auxiliary motor must be interrupted until the temperature has normalised.

⚠ **Hot oil may be sprayed from the hydrodynamic starting clutch. You may suffer very severe burns.**
Keep a close watch on the electric warning device on the starting clutch.
The protective cover must always be fitted.

Further attempts at starting would raise the operating temperature still further and thus cause the safety fuse to operate.

The switching limit of the electric warning device must be set to at least 30 °C below the actuating temperature of the safety fuse to protect the hydrodynamic starting clutch.

1.2.5.2 Auxiliary drive for slow running (e.g. during the cooling down phase/warming up phase)

Before starting the blocking brake must be closed or the rotary furnace have been oscillated into its centre-of-gravity position.

When the auxiliary motor is started, the blocking brake must, if necessary, be released (on hydrodynamic couplings with a time delay of 1 to 3 seconds).

If both auxiliary drives are needed on twin drives, the auxiliary motors must always be started on both drive trains at the same time or with a maximum delay of 1 to 3 seconds.

Diese technische Unterlage hat gesetzlichen Schutz (DIN 34)

After the auxiliary motor is shut off, if the blocking brake is open, the rotary furnace begin to rotate back into its centre-of-gravity position because of the one-sided material filling of the furnace. Due to the reversal of the direction of rotation the overrunning clutch of the auxiliary gear unit acts. If the blocking brake is closed, it prevents the rotary furnace from rotating back. If the blocking brake is open, the centrifugal brake prevents the entire auxiliary drive from running at dangerous excessive speeds during the run-back operation.

⚠ **The auxiliary drive may break apart violently as a result of a excessive speed. Ensure that the centrifugal brake always operates faultlessly.**

1.2.5.3 Maintenance operation (e.g. for lining work)

During maintenance work it is normally necessary to bring the rotary furnace into a certain position, hold it in an unstable position and start it in this unstable position.

When the auxiliary motor is started, the blocking brake must also be released (on hydrodynamic couplings with a time delay of 1 to 3 seconds).

In the case of stop (positioning), during maintenance work the blocking brake must be closed and the auxiliary motor stopped simultaneously.

If both auxiliary drives are needed on twin drives, the auxiliary motors must always be started on both drive trains at the same time or with a maximum delay of 1 to 3 seconds.

In the case of longer planned standstill, after conclusion of maintenance work the blocking brake should be opened and the rotary furnace allowed to rotate back into its centre-of-gravity position. The blocking brake can then be closed.

1.2.6 Emergency stop

1.2.6.1 Emergency stop during normal operation with the main motor

After the main motor is switched off (emergency stop), the rotary furnace will try to rotate back to its centre-of-gravity position. Due to the reversal of the direction of rotation the overrunning clutch of the auxiliary gear unit acts. The blocking brake, which is closed during normal operation, holds the rotary furnace in an unstable position.

In the case of dual drives the main motors must always be switched off (emergency stop) simultaneously on both drive trains.

1.2.6.2 Emergency stop operation with the auxiliary drive

After the auxiliary motor is switched off, the blocking brake must be closed simultaneously. The rotary furnace tries to rotate back into its centre-of-gravity position. Due to the reversal of the direction of rotation the overrunning clutch of the auxiliary gear unit acts. The closed blocking brake holds the rotary furnace in an unstable position.

In the case of auxiliary drives the main motors must always be switched off (emergency stop) simultaneously on both drive trains.

Diese technische Unterlage hat gesetzlichen Schutz (DIN 34)

Contents

1. Scope of supply **2**

2. Handling and storage **2**
2.1 Handling 2
2.2 Storage 3

3. Standard corrosion protection **4**

Diese technische Unterlage hat gesetzlichen Schutz (DIN 34)

1. Scope of supply

The products supplied are listed in the dispatch papers. Check immediately on receipt to ensure that all the products listed have actually been delivered. Damaged or missing parts must be notified in writing immediately.

The gear unit is delivered in the fully assembled state. Additional items (e.g. pipes and fittings) are delivered separately packaged.

If the unit if fitted with a shrink disc, this will be shipped as a loose component.

2. Handling and storage

Note: Observe the ”Safety notes” in section 3.

2.1 Handling

⚠ **When handling FLENDER products use only lifting and handling equipment of sufficient load-carrying capacity!**
Wedges or rails should be used to prevent rolling.

Different forms of packaging may be used depending on the size of the unit and method of transport. Unless otherwise agreed, the packaging complies with the **HPE Packaging Guidelines**.

The symbols marked on the packaging must be observed at all times. These have the following meanings:

Caution! **The gear unit must always be transported with due care to avoid danger to persons and property. Avoid bumping the ends of shafts as this may damage the gear unit.**

Note: The gear unit must be transported using suitable equipment only. Never transport the gear unit with an oil charge.

Caution! **The gear unit may only be handled using the existing brackets, eye bolts or lifting eyes.**
Do not use the front thread at the end of the shaft for attaching ring bolts for transport purposes.

Caution! **If fitted with a shrink disc, the shrink disc must be secured axially prior to handling.**

Diese technische Unterlage hat gesetzlichen Schutz (DIN 34)

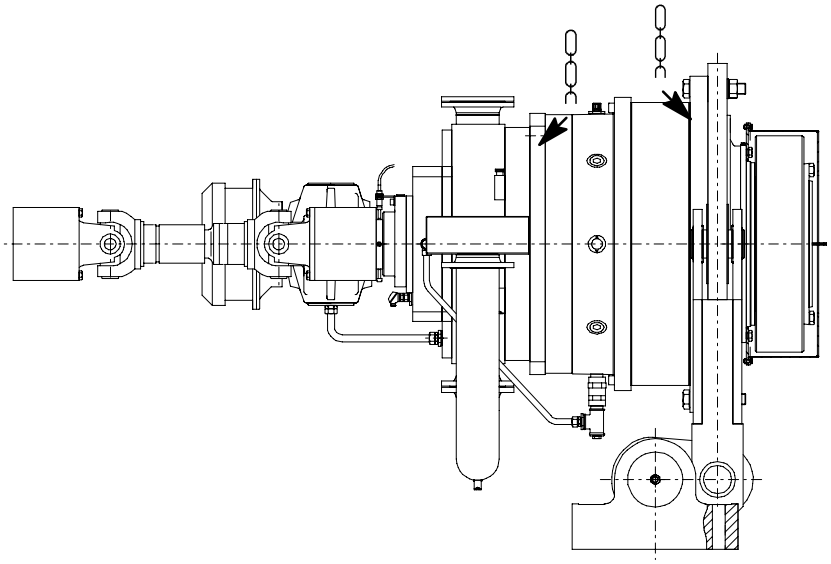

For a detailed illustration of the gear unit, refer to the drawings in the unit documentation.

2.2 Storage

The gear unit must be stored in the position of use in a sheltered place. It must be placed on a vibration-free wooden base and covered over.

⚠ **Do not stack gear units on top of one another.**

Caution! **If the gear unit is being stored out of doors, it must be covered with particular care. It must be ensured that neither moisture nor foreign material can collect on the unit.**

Note: Provision for special environmental conditions during transport (e.g. transport by ship) and storage (climate, termites etc.) must be contractually agreed.

Diese technische Unterlage hat gesetzlichen Schutz (DIN 34)

3. Standard corrosion protection

The gear unit is filled with conservation agent. The free shaft ends are painted for protection.

The outer paint coating is resistant to dilute acids, alkalis, oils and solvents. It is also resistant to sea water, tropical-climate conditions and temperatures up to 140 °C.

Note: Ensure that the paint is not damaged!
Mechanical damage (scratches), chemical damage (acids, alkalis) and thermal damage (sparks, welding beads, heat) cause corrosion which may cause failure of the exterior protective coating.

Note: Unless otherwise agreed, we guarantee for a closed gear unit the interior preservation of the helical-gear unit for 24 months and the preservation of the free shaft ends for 12 months. The guarantee period commences on the date of delivery.

For longer periods of storage (> 24 months) we advise regular checking and, if necessary, renewal of the interior corrosion protection (see section 7 ”Start-up”).

Diese technische Unterlage hat gesetzlichen Schutz (DIN 34)

Contents

1. General **2**

2. Construction and method of operation **3**
2.1 Main gear unit 3
2.1.1 Housing 3
2.1.2 Toothed components 3
2.1.3 Lubrication 3
2.1.4 Storage 3
2.1.5 Shaft seals 3
2.1.6 Cooling 4
2.2 Auxiliary drive 4
2.3 Overrunning clutch 4
2.4 Blocking brake 5
2.5 Centrifugal brake 5
2.6 Shrink disk 5

Diese technische Unterlage hat gesetzlichen Schutz (DIN 34)

1. General

The rotary furnace drive is delivered as a complete drive unit assembled from various components. It is designed for installation in the horizontal position.

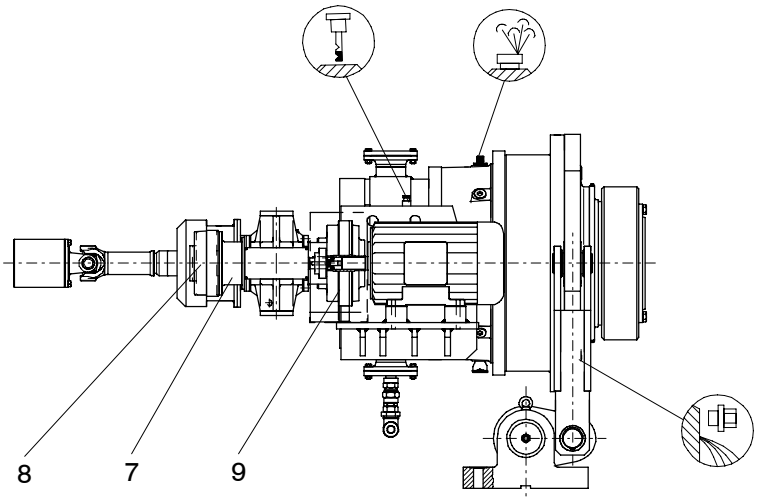

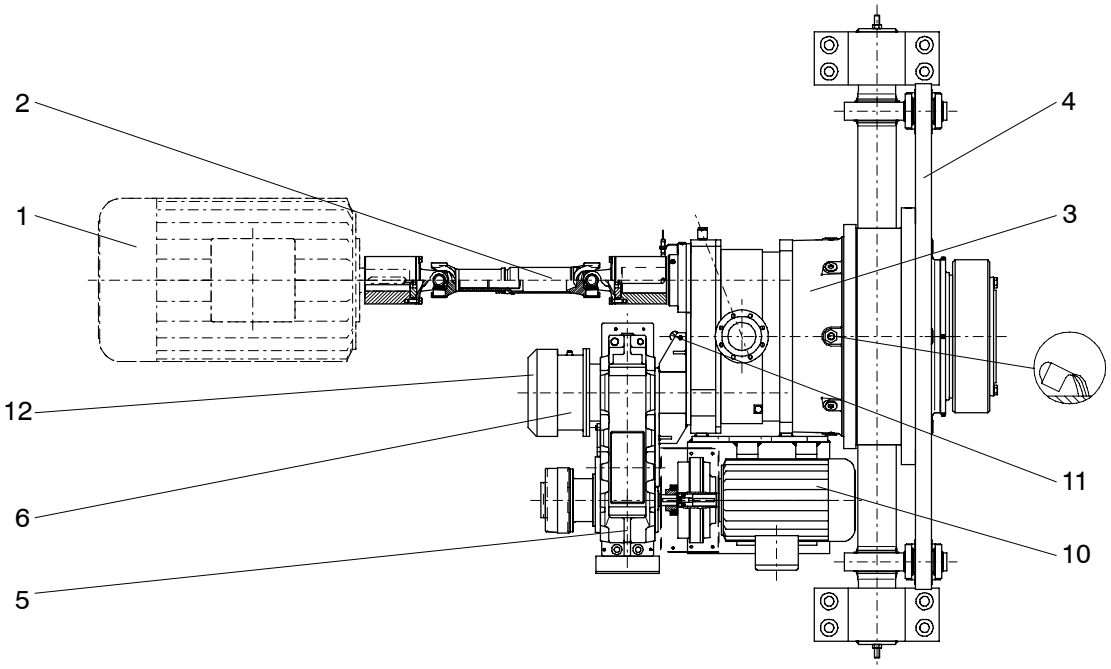

1	Main motor (not included in delivery)	7	Centrifugal brake
2	Cardan shaft	8	Blocking brake
3	Main gear unit	9	Hydrodynamic starting clutch
4	Torque arm	10	Auxiliary motor
5	Auxiliary gear unit	11	Resistance thermometer
6	Overrunning clutch	12	Fan

For a detailed view of the gear unit, see the drawings in the gear-unit documentation.

Diese technische Unterlage hat gesetzlichen Schutz (DIN 34)

2. Construction and method of operation

2.1 Main gear unit

The main gear unit is a helical planetary gear unit and essentially comprises two planet stages, a helical gear stage and a hollow output shaft with shrink disk. The attached auxiliary drive comprises a three-stage helical shaft-mounted gear unit with overrunning clutch, blocking brake, centrifugal brake and hydrodynamic starting clutch.

The gear units are characterised by a low noise level; this is achieved by ground helical gears with a high contact ratio.

For a detailed illustration of the drive please refer to the dimensioned drawing (see section 12, ”Annex”).

2.1.1 Housing

The multi-section gear-unit housing is partly made from high-grade cast iron. The housing of the helical gear stage is designed as a welded part. The housing is rigid in design and due to its form has excellent noise and temperature characteristics.

It is also fitted with a dipstick for checking the oil level, a drain plug for oil change and an air filter for venting the housing.

Colour codes for ventilating, oil inlet, oil level and oil drainage:

Ventilating:	yellow	
Oil inlet:	yellow	
Oil level:	red	
Lubrication points:	red	
Oil drain:	white	

2.1.2 Toothed components

The gear-unit parts with external teeth are case-hardened and ground. The teeth of the helical gear with internal teeth are internally hobbed or shaped. The high quality of the teeth keeps the noise level of the gear unit to a minimum and guarantees reliable operation.

2.1.3 Lubrication

The teeth and rolling bearings of the gear unit are adequately supplied with oil by dip lubrication. As a result the gear units require very little maintenance.

Note: For safety reasons, the gear unit is supplied without oil filling for transport.

2.1.4 Storage

All shafts are mounted in rolling bearings.

2.1.5 Shaft seals

Radial shaft sealing rings at the shaft outlets prevent oil from escaping from the housing and dirt from entering it. Additionally fitted to the high-speed input shaft and the output shaft of the planetary helical gear unit are labyrinth seals which can be refilled with lubricant.

Diese technische Unterlage hat gesetzlichen Schutz (DIN 34)

2.1.6 Cooling

The drive is fitted with an oil supply system for cooling.

For notes regarding the oil-supply unit please see the special Operating Instructions.

2.2 Auxiliary drive

The main gear unit is provided with an auxiliary drive. This enables the gear unit to be operated at a lower output speed in the same direction of rotation. The auxiliary drive is connected with the gear unit by an overrunning clutch.

2.3 Overrunning clutch

The overrunning clutch is located on the output shaft of the auxiliary housing. The oil chamber of the auxiliary housing is connected to the oil chamber of the main gear unit.

⚠ **For oil change of the overrunning clutch please see section 10, ”Maintenance and repair”.**

Overrunning clutches are provided with centrifugally operated grippers. The overrunning clutch acts as a driver in the direction of drive and as a freewheel in the opposite direction of rotation.
In the case of the auxiliary drive the drive takes place through the outer ring of the overrunning clutch.

⚠ **The speeds indicated on the rating plate must not be exceeded in the direction of drive, as otherwise function may be impaired and damage cannot be ruled out.**

In the case of the main drive the inner ring (2) overtakes the outer ring (1) (see Fig. 1). The inner ring and the cage with the sprags rotate during overrun. From a certain speed up (lifting speed) the sprags (4) lift clear. The overrunning clutch then operates wearfree. During this time the overrunning clutch outer ring, which is connected to the auxiliary gear unit via a hollow shaft (200), is stationary.

⚠ **With this drive combination with integrated automatic overrunning clutches the system-specific requirements set out in section 3, ”Safety Notes”, must be observed in all cases!**

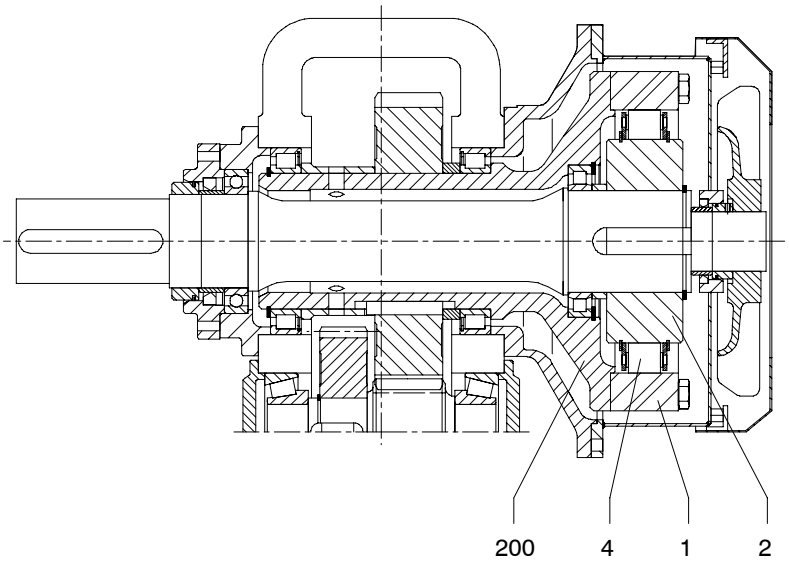

Fig. 1

Diese technische Unterlage hat gesetzlichen Schutz (DIN 34)

Note: The direction of rotation can be changed by reversing the cage. FLENDER must be consulted in all cases on this matter. For this we recommend our customer service (see section 11, ”Spare parts, customer-service addresses”).

⚠ **The overrunning clutch must not be dismantled by unqualified persons, as this may impair safe, reliable operation.**
To prevent damage to or destruction of the overrunning clutch due to excessive speed, it is essential to ensure that the auxiliary drive is not accelerated by the main drive. (when main motor is running, close blocking brake).

The overrunning clutch is fitted with a fan which is secured against accidental contact by a fan cover. The fan sucks ambient air in through the grid on the fan cowl and blows it along the air ducts on the side of the overrunning clutch. This removes heat from the clutch.

Caution! **Make sure that the air intake at the fan cowl is not obstructed.**

2.4 Blocking brake

The braking torque, which can be adjusted by a central adjusting means, is generated by means of spring pressure. Release is done manually or electromagnetically. In a currentless condition the brake is set in the braking position. Readjustment of the brake to compensate for wear is possible without demounting it.

The special Operating Instructions should be noted for operation of the brake.

2.5 Centrifugal brake

If the rotary furnace rotates back, the centrifugal brake restricts the runaway speed on the input shaft of the auxiliary drive.

2.6 Shrink disk

For the main gear unit a shrink disk should be used as a frictional clamping connection between the gear unit hollow shaft and the rotary furnace.

Diese technische Unterlage hat gesetzlichen Schutz (DIN 34)

Contents

1. General information on installation 2

2. Foundation 2

3. Description of installation work 2
3.1 Mounting of the drive unit 2
3.2 Installation of the torque arm 2
3.3 Fitting and demounting the shrink disk 3
3.3.1 Assembly of shrink disk 3
3.3.2 Demounting and remounting the shrink disk 4
3.3.3 Cleaning and greasing the shrink disk 4

4. Gear unit with oil supply system 5
4.1 Mounting of the connecting hoses 5

5. Installation of the clutches 5

Diese technische Unterlage hat gesetzlichen Schutz (DIN 34)

1. General information on installation

During assembly, the ”Safety Instructions” in Section 3 must be observed.

Assembly and installation work must be done with great care by trained and qualified personnel. We earnestly recommend that the customer should have assembly carried out by our customer service (see section 11, ”Spare parts and customer-service addresses”) to prevent damage caused by inproper execution and the resultant exclusion of our liability.

During the planning phase sufficient space must be allowed around the gear unit for later care and maintenance work.

If the auxiliary gear unit is fitted with a fan, there should be sufficient space for air intake.

Adequate lifting equipment must be available before beginning the fitting work.

2. Foundation

The foundation should be designed in such a way that no resonance vibrations are created and that no vibrations are transmitted from adjacent foundations.

Steel structures on which the unit may be mounted must be torsionally rigid. It must be designed according to the mass and torque, taking into account the forces acting on the gear unit.

Note: For dimensions, space requirement, arrangement of supply connections, refer to the drawings in the gear-unit documentation.

3. Description of installation work

The corrosion-preventive coat on the shafts must be removed with suitable cleaning agents (such as benzine).

Caution! **The cleaning agent must never be allowed to come in contact with the shaft seals.**

⚠ **Ensure adequate ventilation. Do not smoke!**
Danger of explosion. Observe current regulations.

3.1 Mounting of the drive unit

The drive unit must be installed with the aid of suitable lifting gear and the lifting holes provided.

3.2 Installation of the torque arm

The torque reaction arm must be installed according to the drawing.

Note: For the main gear unit, the reaction torque corresponding to the torque of the rotary furnace and acting in an opposite direction on the housing must be absorbed.

In the case of the double-sided torque arm the torque is supported by bars and joints on a torsion shaft. This type of construction ensures that the machine bearings are freed from any shearing forces, except for the weights.

Diese technische Unterlage hat gesetzlichen Schutz (DIN 34)

3.3 Fitting and demounting the shrink disk

3.3.1 Assembly of shrink disk

The shrink disk is delivered in its original condition with the unit, loose and ready for mounting.

Caution! **The shrink disk must not be dismantled before tensioning for the first time.**

Caution! **The bore of the hollow shaft and the machine shaft must be absolutely free of grease in the area of the shrink disk seat. This is essential for safe and reliable torque transmission. Do not use contaminated solvents or dirty cloths for removing grease.**

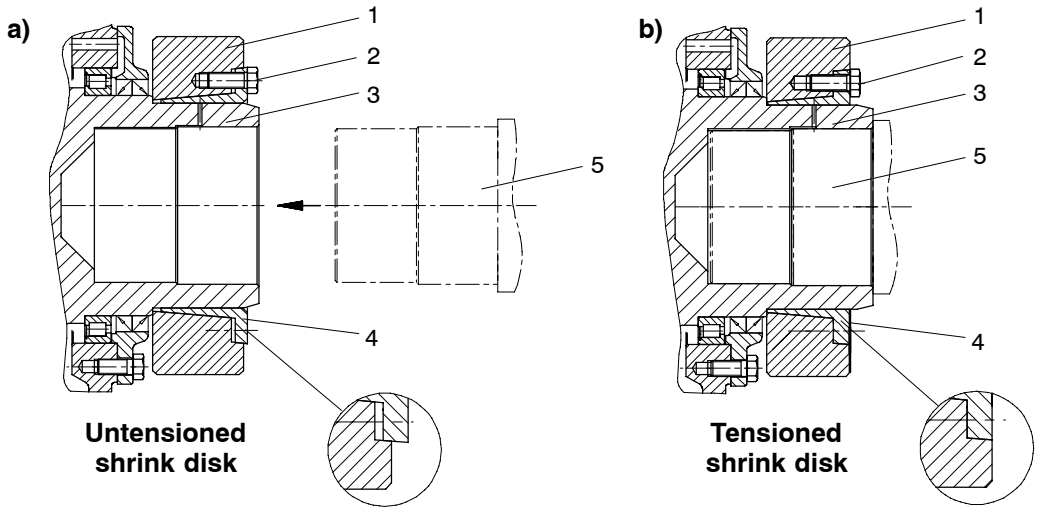

1 Outer ring
2 Tensioning bolts
3 Hollow shaft
4 Inner ring
5 Machine shaft

Part 1 and 4 flush

- Mounting the shaft or fitting the hub onto the shaft

Note: If the gear unit is fitted in a vertical position with the output shaft down, the fitted shrink disk must be protected from dropping.

Caution! **Never tighten the tensioning bolts until the gear unit is installed on the machine shaft.**

- Tighten all the tensioning bolts gradually one after the other, working round several times.

Caution! **Do not tighten diametrically opposite bolts one after the other.**

Caution! **Tighten the tensioning bolts until the front surfaces of the inner and outer rings are aligned [see ”Fig. b)”].**

Note: This allows the tension condition to be checked visually.

Caution! **To avoid overloading the individual bolts, the maximum tightening torque (see table) must not be exceeded. If alignment of the end faces cannot be achieved by tightening, consult FLENDER.**

Diese technische Unterlage hat gesetzlichen Schutz (DIN 34)

Tensioning-bolt thread	max. tightening torque per bolt (with μ = 0.1)	
	Strength class 10.9 Nm	Strength class 12.9 Nm
M 6	12	14.5
M 8	29	35
M 10	58	70
M 12	100	121
M 14	160	193
M 16	240	295
M 20	470	570
M 24	820	980
M 27	1210	1450
M 30	1640	1970
M 33	2210	2650
M 36	2850	3420

Table 6.1: Maximum torques for tensioning bolts
For strength class see bolt head

⚠ **For safety reasons it must be ensured that no contact with the shrink disk is possible during operation.**

3.3.2 Demounting and remounting the shrink disk

- The process of releasing the shrink disk is similar to that of tightening.
- Loosen the tensioning bolts gradually one after the other, working round several times.
- If the outer ring does not release from the inner ring, several tensioning bolts can be removed and then screwed into adjacent forcing threads. This releases the shrink connection.
- Pull the shrink disk off the hollow shaft.

3.3.3 Cleaning and greasing the shrink disk

- Shrink disks should not be dismantled and re-greased before being re-installed. Re-greasing of the sliding surfaces between inner and outer ring is not necessary.

The shrink disk should only be dismantled and cleaned if it is dirty.

Caution! **Following cleaning, only the inner sliding surfaces of the shrink disk should be re-greased.**

Diese technische Unterlage hat gesetzlichen Schutz (DIN 34)

Use a solid grease with a coefficient of friction of μ = 0.04 as shown in the following table.

Lubricant	Form	Manufacturer
Molykote 321 R (lubricating paint)	Spray	DOW Corning
Molykote Spray (powder spray)	Spray	DOW Corning
Molykote G Rapid	Spray or Paste	DOW Corning
Aemasol MO 19 P	Spray or Paste	A. C. Matthes
Molykombin UMFT 1	Spray	Klüber Lubrication
Unimoly P 5	Powder	Klüber Lubrication

Table 6.2: Lubricants for shrink disk after cleaning

4. Gear unit with oil supply system

Observe the Operating Instructions of the Oil Supply System.

4.1 Mounting of the connecting hoses

The connecting hoses should be carefully cleaned and be screwed on in accordance with the drawings. Prior to this remove the screw plugs or blank flanges.

5. Installation of the clutches

Caution! **When installing the clutches, the specific Operating Instructions for the couplings must be observed.**

Before beginning installation, the shaft ends and the clutch parts must be carefully cleaned.

Clutches must be pulled on with the aid of the centring thread on the shaft ends and secured against axial shift.

Caution! **Never use force or knock the clutches into position, as this will cause irreparable damage to the gear unit.**

The clutches are aligned in accordance with the specific Operating Instructions for the couplings.

Diese technische Unterlage hat gesetzlichen Schutz (DIN 34)

Contents

1. Procedure before start-up 2
1.1 Removal of conservation agent 2

2. Charging with lubricant 2

3. Start-up 3

4. Removal from service 4
4.1 Interior conservation during longer disuse 4
4.1.1 Interior conservation with gear oil 4
4.1.2 Interior conservation with special conservation agent 4
4.1.3 Interior conservation procedure 5
4.2 Exterior conservation 5
4.2.1 Exterior conservation procedure 5

Diese technische Unterlage hat gesetzlichen Schutz (DIN 34)

1. Procedure before start-up

Note: Observe the ”Safety notes” in section 3.

1.1 Removal of conservation agent

- Unscrew oil drain plug and drain off the remains of preservative or running-in oil from the housing into a suitable receptacle and dispose of in accordance with regulations.

⚠ **Remove any oil spillage immediately with an oil-binding agent.**

- Replace the oil drain plug

Caution! **Before start-up, replace the yellow plastic plug with air filter (see notice on gear unit).**

⚠ **The oil must not come into contact with skin (e.g. hands of the operating personnel).**
The safety instructions on the data sheets of the used oil should be observed.

2. Charging with lubricant

- Open oil filler plug

Caution! **Fill the gear unit up with fresh oil using a filter (max. mesh 25 µm).**

Note: For the correct type of oil (of various brands) to be used refer to the operating instructions BA 7300 EN supplied separately.
Information on the type, viscosity and quantity of the oil is given on the rating plate on the gear unit.
The quantity of oil stated on the rating plate is an approximation only. The actual oil quantity to be filled in is shown by the marks on the oil dipstick.

Note: In the case of gear units with an oil cooling system, the oil circuit should also be filled up. To do so, the gear unit should be started temporarily in accordance with Section 8.

- Check oil level with the dipstick.

Note: The oil level should be at the top mark on the dipstick.

Caution! **Any oil leaking out must immediately be removed with an oil binding agent.**
The oil must not come into contact with skin (e.g. hands of the operating personnel).
The safety instructions on the data sheets of the used oil should be observed.

- Replace oil filler plug

Gear units with auxiliary drive:

Caution! **Before start-up, ensure that the overrunning clutch can be turned without exerting undue force.**

Diese technische Unterlage hat gesetzlichen Schutz (DIN 34)

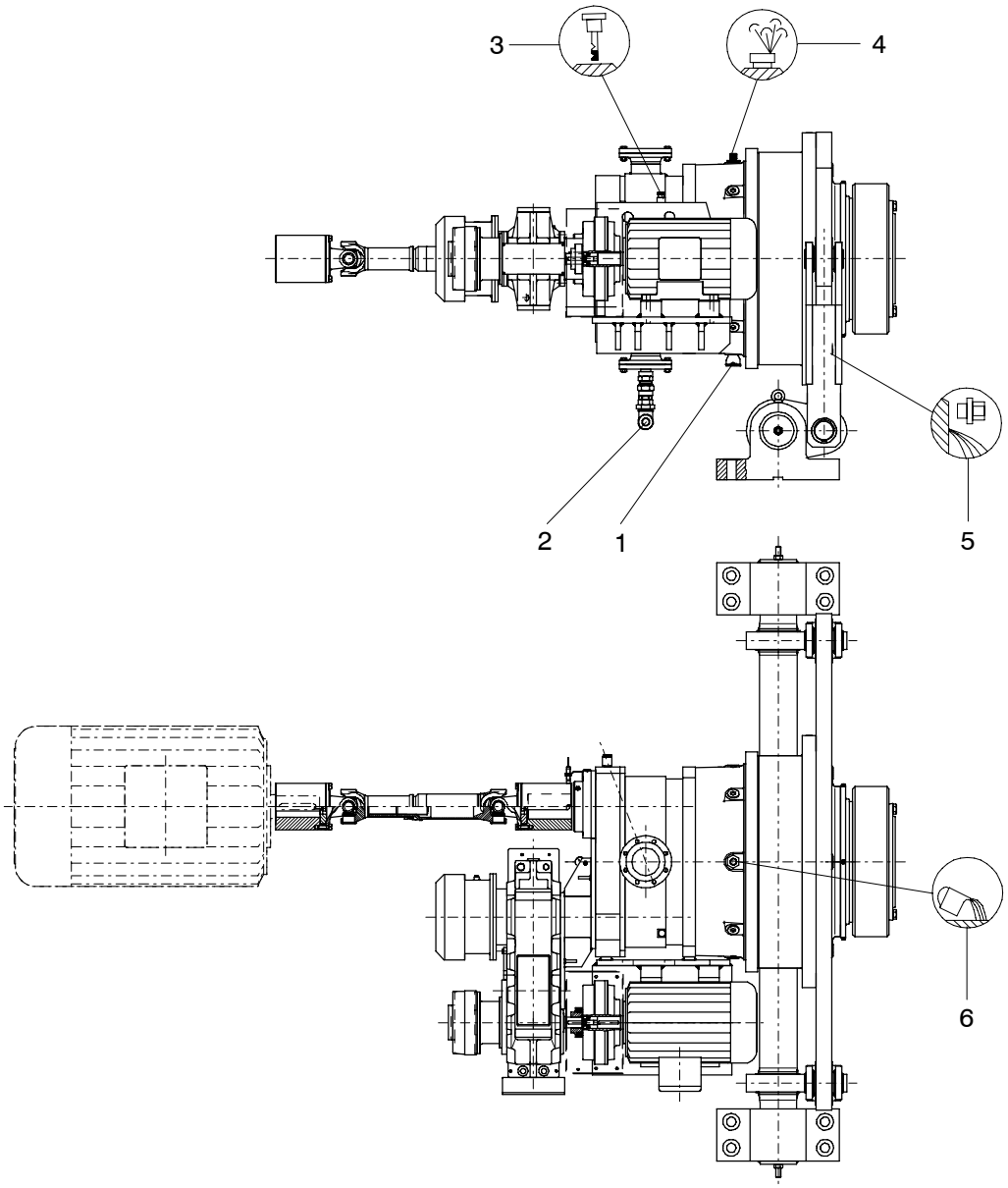

1	Connection for suction pipe	4	Air filter
2	Connection for pressure pipe	5	Oil drain plug
3	Dipstick	6	Oil filler plug

For a detailed illustration of the gear unit, refer to the drawings in the unit documentation.

3. Start-up

- Check oil level of gear unit

Note: When the oil has cooled down, the oil level should be at the top mark on the dipstick. If the oil is hot, the marks may be slightly exceeded. The oil level must, by no means, be below the mark; replenish oil, if necessary.

Diese technische Unterlage hat gesetzlichen Schutz (DIN 34)

Gear unit with overrunning clutch:

Before starting the unit up, ensure that the overrunning clutch can be turned in free-running direction without exerting undue force. Observe the direction arrows on the gear unit.

Before connecting the motors, determine the direction of rotation of the three-phase current supply using a rotating-field indicator. Connect the motors as indicated.

Note: The gear unit must be operated only with an oil-supply unit. The oil-supply unit serves to cool the oil.

4. Removal from service

- To take the gear unit out of service, first switch off the drive assembly.

⚠ **Secure the drive assembly to prevent it from being started up accidentally. Attach a warning notice to the start switch.**

- Close the shut-off valves in the coolant-supply and return pipes (gear units with water-oil-cooling systems only). **Drain the water from water-oil-cooling systems to prevent it freezing.**

Note: During longer periods of disuse, start the unit up briefly at intervals of approx. 3 weeks. If it is to remain out of service for longer than six months, fill it with conservation agent (see point 4.1).

4.1 Interior conservation during longer disuse

Depending on the type of lubrication or shaft sealing, the following types of internal corrosion protection can be used.

4.1.1 Interior conservation with gear oil

Gear units with splash-lubrication systems and contacting shaft seals can be filled with the correct type of service oil up to a point just below the air filter. Replace the air filter with the plug screw.

Caution! **Before starting the unit up again, ensure that the level of the oil has declined to the top mark of the dipstick and the upper plug screw has been replaced by the air filter.**

4.1.2 Interior conservation with special conservation agent

Before longer periods of storage, gear units with pressurised lubrication systems or oil-circuit cooling should be allowed to idle with a charge of conservation agent.

Duration of protection	Conservation agent	Special measures
less than **24** months	Castrol Alpha SP 220 S	Close gear unit, replace venting screw or air filter with a yellow plug screw, (replace the original parts before start-up)
For storage periods longer than 24 months, renew the conservation agent. For storage periods over 36 months, FLENDER should be consulted.		

Table 7.1: Conservation procedure when using mineral oil or PAO-based synthetic oil

Diese technische Unterlage hat gesetzlichen Schutz (DIN 34)

Duration of protection	Conservation agent	Special measures
less than **36** months	Special anti-corrosion oil TRIBOL 1390 1)	Close gear unit, replace venting screw or air filter with a yellow plug screw, (replace the original parts before start-up)
For storage periods over 36 months, FLENDER should be consulted.		

Table 7.2: Conservation procedure when using PG-based synthetic oil

1) Resistant to tropical conditions and sea water. Max. ambient temperature 50 °C

4.1.3 Interior conservation procedure

- Switch the gear unit off and drain the oil as described in section 10 ”Maintenance and repair”.
- Fill conservation agent in accordance with table 7.1 or 7.2, as appropriate, up to the top mark of the dipstick.
- Close the oil-inlet screw again.
- Start the gear unit and allow it to idle for a short time.
- Unscrew the oil drain plug and allow the conservation agent to drain into a suitable container and dispose of it according to regulation.

⚠ **The conservation agent emerging from the gear unit may be hot.**
Wear gloves to avoid scalding.

- Replace the oil drain plug.

Caution! **Before re-starting the gear unit, replace the plug screw with the venting screw or air filter.**
See also point 1.1.

4.2 Exterior conservation

Duration of protection	Conservation agent	Layer thickness	Remarks
less than **12** months	Tectyl 846 K19	approx. 50 µm	Long-term wax-based conservation agent, resistant to sea water and tropical conditions, soluble in benzine

Table 7.3: Exterior protection of shaft ends and other bare surfaces

4.2.1 Exterior conservation procedure

- Clean the surfaces
- Apply grease to shaft-sealing rings to protect the sealing lips from conservation agent
- Apply conservation agent

Diese technische Unterlage hat gesetzlichen Schutz (DIN 34)

Contents

1. General operating data 2
1.1 Measuring-surface sound-pressure level 2

2. Modes of rotary furnace operation 3
2.1 Normal operation with the main motor 4
2.2 Operation with the auxiliary drive 4
2.2.1 Starting clutch (for slow running) 5
2.2.2 Auxiliary drive for slow running (e.g. during the cooling down phase/warming up phase) 5
2.2.3 Maintenance operation (e.g. for lining work) 5

Diese technische Unterlage hat gesetzlichen Schutz (DIN 34)

1. General operating data

During operation, the unit must be monitored for:

- excessive operating temperature (The gear unit is designed for a temperature of 90 °C with mineral oil in continuous operation. For higher temperatures, synthetic oils must be used. perating temperatures of 100 °C are permitted for short periods (see also section 10, ”Maintenance and repair”).)
- changes in gear noise
- possible oil leakage at the housing and shaft seals

and

- correct oil level (see section 7, ”Start-up”).

Note: To check the oil level, stop operation of gear unit.
When the oil is cool, the level should be at the upper mark on the oil dipstick. If the oil is hot, the marks may be slightly exceeded. It must not be allowed to fall below the mark. If necessary, top oil up to the correct level.

Caution! **If any irregularities are noticed during operation, switch the drive unit off at once. Determine the cause of the fault, using the table in section 9.**
This table contains a list of possible faults, their causes and suggested remedies.
If the cause cannot be identified or the unit repaired with the facilities available, you are advised to contact one of our customer-service offices for specialist assistance (see section 11).

1.1 Measuring-surface sound-pressure level

The measuring-surface sound-pressure level of the gear unit at a distance of 1 m can be obtained from section 1, ”Technical data”.

The measurement is carried out to DIN 45635 Parts 1 and 23, using the sound-intensity method.

The workplace of the operating personnel is defined as the area on the measuring-surface at a distance of 1 metre in the vicinity of which persons may be present.

The sound-pressure level applies to the warmed up gear unit at input speed n_1 and input power P_1 stated on the rating plate.

The measuring-surface sound-pressure level includes add-on lubrication units (if applicable). With outgoing and incoming pipes, the interfaces are the flanges.

If repeat measurements on site do not produce conclusive results with regard to measuring technology, the measurement obtained on the FLENDER test bench will apply.

Diese technische Unterlage hat gesetzlichen Schutz (DIN 34)

2. Modes of rotary furnace operation

Three different modes of operation are possible:

- Normal operation with the main motor
- Operation with the auxiliary motor (slow running)
- Maintenance operation (e.g. for lining work)

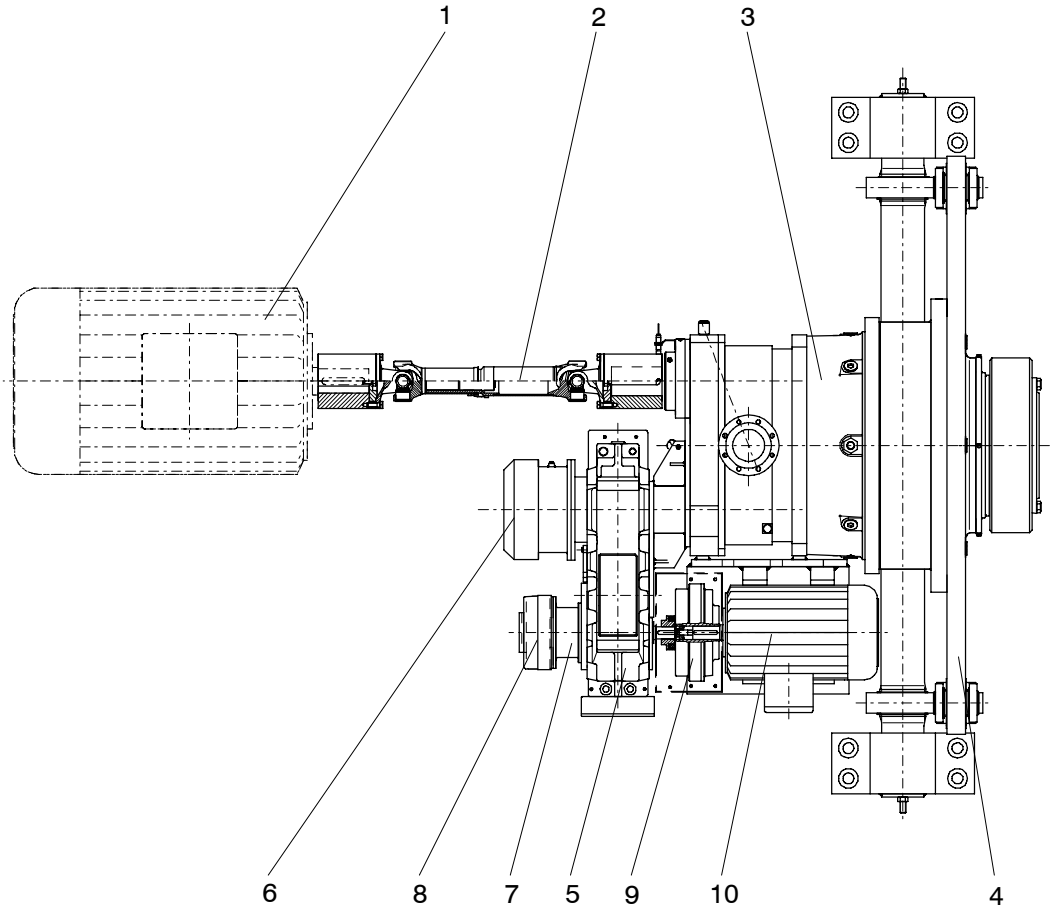

1	Main motor (not included in delivery)	6	Overrunning clutch
2	Cardan shaft	7	Centrifugal brake
3	Main gear unit	8	Blocking brake
4	Torque arm	9	Hydrodynamic starting clutch
5	Auxiliary gear unit	10	Auxiliary motor

For a detailed view of the gear unit, the drawings in the gear-unit documentation must be observed.

Diese technische Unterlage hat gesetzlichen Schutz (DIN 34)

2.1 Normal operation with the main motor

The drive torque generated by the main motor is transmitted through the cardan shaft to the main gear unit.

The main gear unit is mounted on the drive shaft with a shrink disk. The back torque is taken up by a double-sided torque arm.

After the main motor is switched off, the rotary furnace will try to rotate back to its centre-of-gravity position. Due to the reversal of the direction of rotation the overrunning clutch of the auxiliary gear unit acts. If the blocking brake is closed, it prevents the rotary furnace from rotating back. If the blocking brake is open, the centrifugal brake prevents the entire auxiliary drive from running at dangerous excessive speeds during the run-back operation.

Caution! **The centrifugal brake has an important safety function as a protection against excessive speeds. It must therefore be inspected twice yearly in accordance with the inspection and maintenance regulations.**

⚠ **The auxiliary drive may break apart violently as a result of a excessive speed. Ensure that the centrifugal brake always operates faultlessly.**

Caution! **Starting the main motor while the rotary furnace is moving back will irreparably damage the drive.**

Caution! **The rotary furnace drive must be interlocked so that only the main motor or the auxiliary motor can be started simultaneously. If the main motor and auxiliary motor are started simultaneously, parts of the drive unit may be irreparably damaged. A so-called ”flying start”, i.e. starting with the auxiliary drive first, then engaging the main drive and disengaging the auxiliary drive, is possible.**

In the case of dual drives the main motors must always be started simultaneously on both drive trains.

The blocking brake must be closed when the auxiliary motor is shut off and the main motor is running.

2.2 Operation with the auxiliary drive

A separate auxiliary drive is provided for slow running and maintenance work.

The drive torque generated by the auxiliary motor is transmitted to the input shaft of the auxiliary gear unit via a coupling.

The auxiliary gear unit steps down the drive speed.

The increased drive torque is conducted into the second input shaft of the main gear unit. The drive torque is further transmitted during operation with the main drive, but at a reduced speed.

Caution! **The rotary furnace drive must be interlocked so that only the main motor or the auxiliary motor can be started simultaneously. If the main motor and auxiliary motor are started simultaneously, parts of the drive unit may be irreparably damaged. A so-called ”flying start”, i.e. starting with the auxiliary drive first, then engaging the main drive and disengaging the auxiliary drive, is possible.**

Diese technische Unterlage hat gesetzlichen Schutz (DIN 34)

2.2.1 Starting clutch (for slow running)

The hydrodynamic starting clutch is protected against excessive operating temperatures by an electric warning device. When the set temperature is reached, the start of the auxiliary motor must be interrupted until the temperature has normalised.

Caution!

Hot oil may be sprayed from the hydrodynamic starting clutch. You may suffer very severe burns.
Keep a close watch on the electric warning device on the starting clutch.
The protective cover must always be fitted.

Further attempts at starting would raise the operating temperature still further and thus cause the safety fuse to operate.

The switching limit of the electric warning device must be set to at least 30 $$C below the actuating temperature of the safety fuse to protect the hydrodynamic starting clutch.

2.2.2 Auxiliary drive for slow running (e.g. during the cooling down phase/warming up phase)

Before starting the blocking brake must be closed or the rotary furnace have been oscillated into its centre-of-gravity position.

When the auxiliary motor is started, the blocking brake must, if necessary, be released (on hydrodynamic couplings with a time delay of 1 to 3 seconds).

If both auxiliary drives are needed on twin drives, the auxiliary motors must always be started on both drive trains at the same time or with a maximum delay of 1 to 3 seconds.

After the auxiliary motor is shut off, if the blocking brake is open, the rotary furnace begin to rotate back into its centre-of-gravity position because of the one-sided material filling of the furnace. Due to the reversal of the direction of rotation the overrunning clutch of the auxiliary gear unit acts. If the blocking brake is closed, it prevents the rotary furnace from rotating back. If the blocking brake is open, the centrifugal brake prevents the entire auxiliary drive from running at dangerous excessive speeds during the run-back operation.

⚠ **The auxiliary drive may break apart violently as a result of a excessive speed.**
Ensure that the centrifugal brake always operates faultlessly.

2.2.3 Maintenance operation (e.g. for lining work)

During maintenance work it is normally necessary to bring the rotary furnace into a certain position, hold it in an unstable position and start it in this unstable position.

When the auxiliary motor is started, the blocking brake must also be released (on hydrodynamic couplings with a time delay of 1 to 3 seconds).

In the case of stop (positioning), during maintenance work the blocking brake must be closed and the auxiliary motor stopped simultaneously.

If in the case of dual drives both auxiliary drives are required, the auxiliary drives must always be switched on simultaneously on both drive trains.

In the case of longer planned standstill, after conclusion of maintenance work the blocking brake should be opened and the rotary furnace allowed to rotate back into its centre-of-gravity position. The blocking brake can then be closed.

Diese technische Unterlage hat gesetzlichen Schutz (DIN 34)

Contents

1. General information on malfunctions 2

2. Possible faults 2

Diese technische Unterlage hat gesetzlichen Schutz (DIN 34)

1. General information on malfunctions

Note: Malfunctions occurring during the warranty period which necessitate repair of the gear unit may only be remedied by FLENDER service personnel.
Even after the warranty period has elapsed, we recommend our customers to consult our Service Division in respect of malfunctions whose cause cannot be clearly ascertained.

2. Possible faults

Malfunctions	Causes	Remedy
Main drive motor will not start up	Overload at output	Reduce load
	Motor of main drive defective	Repair or replace motor
	Wrong direction of the motor	Change poles of the motor
	Overrunning clutch is jammed	Install a new overrunning clutch
	Cage with grippers of the overrunning clutch improperly installed	Install cage of the overrunning clutch turned by 180°
Auxiliary drive motor will not start up	Overload at output	Reduce load
	Motor of the auxiliary drive unit is defective	Repair or replace motor
	Motor-Brake not lifted	Correct electrical connection of brake
Auxiliary drive motor starts up, but the output drive shaft of the gear unit does not rotate	Cage with clamping elements of overrunning clutch is incorrectly installed	Install cage offset 180°
	Direction of rotation of the motor is incorrect	Reverse polarity of motor
	Overrunning clutch defective	Install a new overrunning clutch
	Blocking brake not released	Adjust control circuit
Gear unit noise changed	Teeth damaged	Consult customer service. Check components with teeth and, if necessary, replace damaged components
	Bearing backlash increased	Consult customer service. Adjust bearing backlash.
	Faulty bearings	Consult customer service. Replace faulty bearings.
	Labyrinth rings rubbing	Readjust labyrinth rings

Diese technische Unterlage hat gesetzlichen Schutz (DIN 34)

Malfunctions	Causes	Remedy
Temperature rise at bearing points	Oil level in gear unit housing too low	Check oil level and, if necessary, top up oil
	Oil too old	Check when oil last changed and, if necessary, change oil. See Section 10.
	Faulty oil-supply system	Observe operating instructions for oil-supply system.
	Faulty bearings	Consult customer service. Check and, if necessary, replace bearings
Raised operating temperature	Oil level in gear unit housing too high	Check the oil level at room temperature, correct oil level if necessary
	Oil too old	Check when oil was last changed and, if necessary, change oil. See Section 10.
	Oil heavily contaminated	Change oil. See Section 10.
	Fault in oil-supply system	Observe operating instructions for oil-supply system.
	Gear units with fan: Intake opening in fan cowl and/or gear unit housing very dirty	Clean fan cowl and gear unit housing
Loud noises in area of gear unit fastenings	Gear unit fastening has loosened	Tighten screws/nuts with specified torque.Replace damaged screws/nuts.
Oil escaping from gear unit	Housing covers or parting surfaces inadequately sealed	Check and, if necessary, replace seals. Seal parting surfaces
	Faulty radial shaft sealing rings	Check and, if necessary, replace radial shaft sealing rings
Gear unit is oiled up	Housing covers or parting surfaces inadequately sealed	Check seals and, if necessary, seal parting surfaces
	Labyrinth seals oiled up	Check oil filling Clean labyrinths Change transporting position

Diese technische Unterlage hat gesetzlichen Schutz (DIN 34)

Malfunctions	Causes	Remedy
Oil foaming in lubricating oil sump	Water in oil	Examine oil for presence of water by test tube sampling. Have oil tested by chemistry laboratory.
Oil consumption too high	Housing covers or parting surfaces inadequately sealed Faulty radial shaft sealing rings Leaking pipework and connections Fault in oil-supply system	Check and, if necessary, replace seals. Seal parting surfaces Check and, if necessary, replace radial shaft sealing rings Leaking pipework and connections Observe operating instructions for oil-supply system
Fault in oil-supply system		Observe operating instructions for oil-supply system
Lubricating oil temperature too low	Gear unit has not warmed up while running Fault in oil-supply system	wait Observe operating instructions for oil-supply system

Diese technische Unterlage hat gesetzlichen Schutz (DIN 34)

Contents

1. General information on maintenance 2

2. Description of maintenance and repairs 3
2.1 Examining oil for water content 3
2.2 Carrying out oil changes 3
2.2.1 Top up oil 5
2.3 Re-charging Taconite seals with grease 5
2.4 Clean air filter 6
2.5 Cleaning fan, fan cowl and gear unit housing 6
2.6 Checking all fixing screws for tightness 7
2.7 Oil-supply unit 8
2.8 Gear unit inspection 8

3. Lubricants 8

Diese technische Unterlage hat gesetzlichen Schutz (DIN 34)

1. General information on maintenance

Note: All maintenance and repair work should be carried out with due care and only by thoroughly trained personnel.
The notes in Section 3 ”Safety notes” should be observed.

Caution! **The periods listed in Table 10.1 are largely dependent on the conditions of use of the gear unit. For this reason, it is only possible to state average periods which relate to a:**

daily operating time of	**24 hours**
duty factor of	**ED 100 %**
and a maximum oil temperature of	**90 °C** (mineral oil only) **100 °C** (synthetic oil only)

Note: With different operating conditions, the periods should be adjusted accordingly.

The part numbers (...) quoted in the following passages correspond to those in the assembly drawing (see section 1 ”Technical Data”).

Measures	Periods	Remarks
Check oil temperature	daily	
Check gear unit noise for changes	daily	
Check oil level	monthly	Oil level at the top mark on the dipstick
Check gear unit for leakage	monthly	
Check oil for water content	after approx. 400 op.hrs/ at least once a year	see 2.1
Initial oil change after startup	after approx. 400 op.hrs	see 2.2
Subsequent oil changes	every 18 months or 5000 op.hrs 1)	see 2.2
Re-charging Taconite seals with grease	Every 3000 service hours, every 6 months at least	See 2.3
Clean air filter	Every 3 months	See 2.4
Clean fan, cowl and gear unit housing	at same time as oil change	see 2.5
Check all fixing screws for tightness	after 1st oil change, then after every 2nd oil change	see 2.6
Carry out complete inspection of gear unit	approx. every 2 years when oil change due	see 2.8

Table 10.1: Maintenance and repairs

Note: The periods should be adjusted as required under different operating conditions.

1) when using synthetic oils the periods can be tripled.

Diese technische Unterlage hat gesetzlichen Schutz (DIN 34)

2. Description of maintenance and repairs

2.1 Examining oil for water content

Detailed information on examining the oil for water content can be obtained from your lubricant manufacturer.

2.2 Carrying out oil changes

Caution! **When changing the oil the gear unit should <u>always</u> be filled with the <u>oil grade previously in use!</u> Mixing oils of different grades or makes is NOT permissible. In particular, synthetic oils may not be mixed with mineral oils or different synthetic oils. When changing over from mineral oil to synthetic oil or from synthetic oil with a particular base to synthetic oil with another base, the gear unit must be flushed through thoroughly with the new oil grade.**

When changing the oil, the housing must also be cleaned thoroughly by flushing with oil to remove oil sludge, abraded particles and residues of old oil. For this purpose, the same oil grade should be used as is in use for operation of the gear unit. Viscous oils should be warmed beforehand. Only when all residues have been removed, may the fresh oil be poured in.

Note: The oil should be drained off, while the gear unit is still warm, after shutdown.

- Shut down gear unit by shutting off the drive unit

⚠ **Secure drive unit to prevent accidental startup.**
Affix notice at the switch-on point.

- Close shut-off valves in the cooling water inlet and outlet lines (in the case of gear unit with oil cooling system)
- Place a suitable collection receptacle under the oil drain plug of the gear unit housing
- Unscrew the breather on the top of the housing
- Unscrew oil drain plug and drain oil off into the receptacle

Note: Dispose of used oil in accordance with environmental regulations.

⚠ **There is a risk of scalding from the hot oil emerging.**
Wear protective gloves.

- Thoroughly clean the permanent magnet of the oil drain plug
- Screw in oil drain plug

Note: Check condition of seal washer (the seal washer is vulcanized onto the oil drain plug); use new oil drain plug if necessary.

- Loosen the oil-inlet screw

Caution! **Fill gear unit up with fresh oil using a filling filter (max. filter coarseness 25 µm).**

Diese technische Unterlage hat gesetzlichen Schutz (DIN 34)

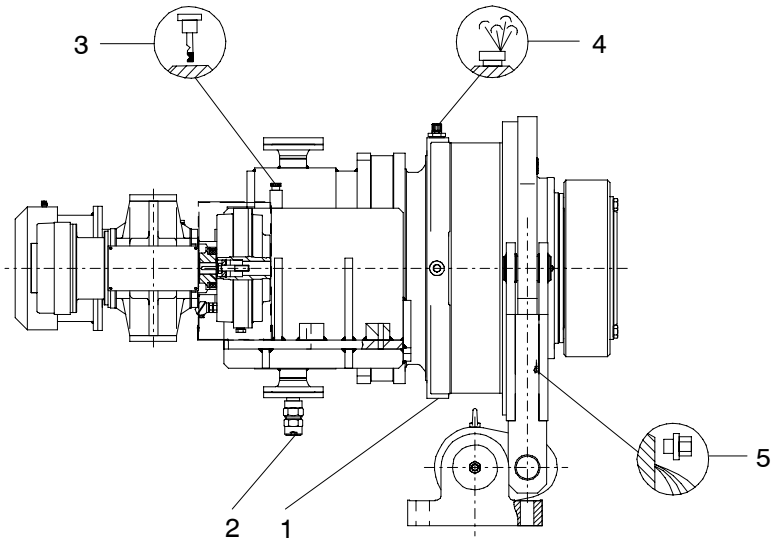

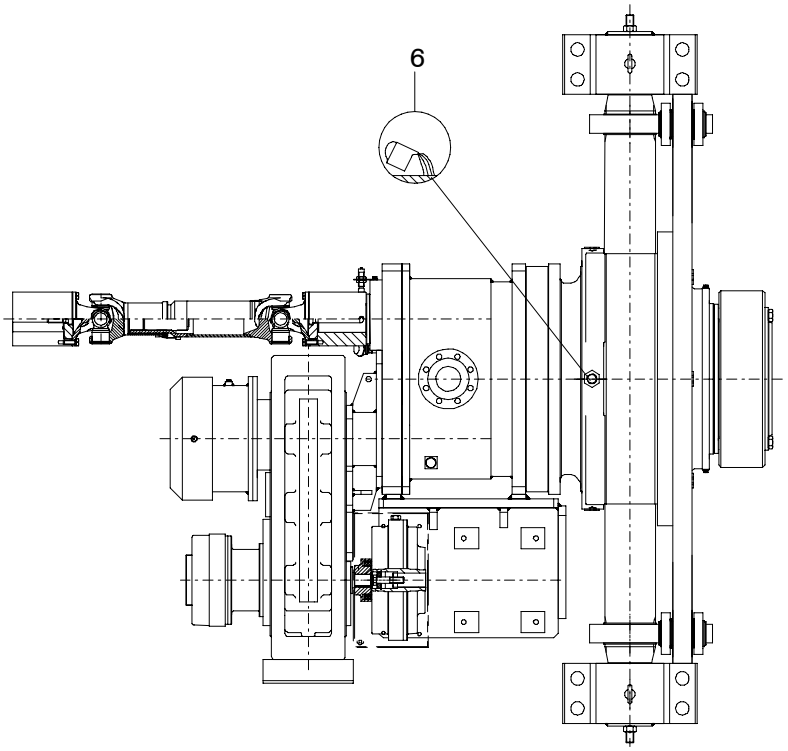

1	Connection for suction pipe	4	Air filter
2	Connection for pressure pipe	5	Oil drain plug
3	Dipstick	6	Oil filler plug

For exact details of the gear unit, refer to the drawings in the gear-unit documentation.

Diese technische Unterlage hat gesetzlichen Schutz (DIN 34)

Note: The oil to be used will be found in Section 12 ”Appendix”.
Data, such as oil grade, oil viscosity and quantity of oil required should be taken from the rating plate (see Section 1 ”Technical Data”).

- Check oil level with the dipstick.

Note: The oil level should be at the top mark on the dipstick.

Caution! **Any oil escaping should be removed immediately with oil binding agent.**
The oil must not come into contact with skin (e.g. hands of the operating personnel).
The safety instructions on the data sheets of the used oil should be observed.

- Close oil inlet

2.2.1 Top up oil

- Shut gear unit down and measure oil level with dipstick

Note: The oil level should be at the top mark on the dipstick.

- Open the oil inlet screw

Caution! **Fill gear unit up with fresh oil using a filling filter (max. filter coarseness 25 µm).**

Note: Use only the oil grade previously in use (see also 2.2).
Data, such as oil grade, oil viscosity and quantity of oil required should be taken from the rating plate (see Section 1. ”Technical data”).

- Check oil level with the dipstick.

Note: The oil level should be at the top mark on the dipstick.

Caution! **Any oil escaping should be removed immediately with oil binding agent.**
The oil must not come into contact with skin (e.g. hands of the operating personnel).
The safety instructions on the data sheets of the used oil should be observed.

- Close oil inlet

2.3 Re-charging Taconite seals with grease

- Shut down gear unit by shutting off the drive unit

⚠ **Secure drive unit to prevent accidental startup.**
Affix notice at the switch-on point.

- Inject approx. 30 g lithium-based bearing grease into each of the lubrication points of the Taconite seal. The lubrication points are fitted with flat grease nipples type AM10x1 to DIN 3404.

⚠ **Remove and dispose of any old grease emerging from the seals.**

Diese technische Unterlage hat gesetzlichen Schutz (DIN 34)

2.4 Clean air filter

- Shut down gear unit by shutting off the drive unit

Secure drive unit to prevent accidental startup.
Affix notice at the switch-on point.

The air filter must be cleaned whenever it is coated or clogged with dust, i.e. every oil change at the latest. To do this, unscrew the air filter, wash it with benzene or a similar cleaning agent, and allow it to dry. It can also be cleaned with compressed air.

Caution! **The safety instructions on the data sheets of the used cleaning agent should be observed!**

2.5 Cleaning fan, fan cowl and gear unit housing

- Shut down gear unit by shutting off the drive unit

Secure drive unit to prevent accidental startup.
Affix notice at the switch-on point.

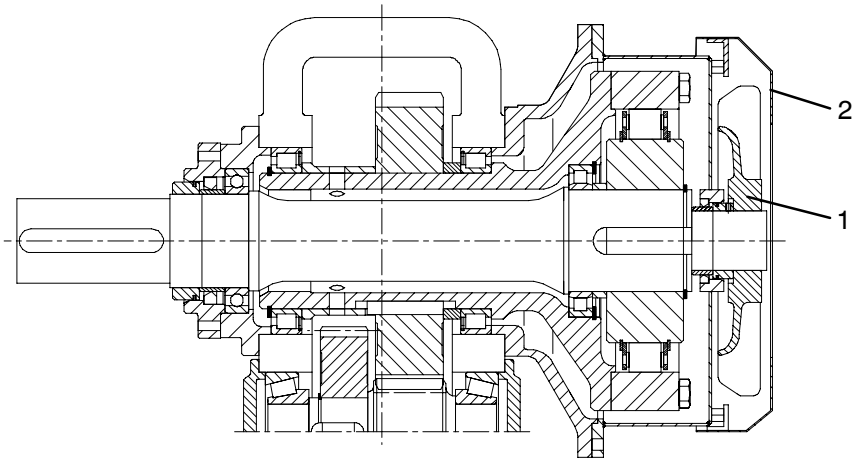

1 Fan 2 Fan cowl

Detailed illustrations of the gear unit will be found in the drawings in the gear unit documentation.

- Remove fan cowl
- Clean the fan cowl, fan wheel and housing ribs. If dirt is encrusted, use a brush and suitable cleaning fluid.
- Clean off any corrosion
- Screw the fan cowl into position

Caution! **Cleaning the gear unit with a high-pressure cleaning device is not permissible.**

Diese technische Unterlage hat gesetzlichen Schutz (DIN 34)

2.6 Checking all fixing screws for tightness

- Shut down gear unit by shutting off the drive unit

Secure drive unit to prevent accidental startup.
Affix notice at the switch-on point.

- Close shut-off valves in the cooling water inlet and outlet lines (in the case of gear unit with oil cooling system)
- Check all fixing screws for tightness with a torque wrench.

Thread size	Strength class	Tightening torque (with μ = 0.14)
M 6	8.8	10 Nm
M 8	8.8	25 Nm
M 10	8.8	49 Nm
M 12	8.8	86 Nm
M 16	8.8	210 Nm
M 20	8.8	410 Nm
M 24	8.8	710 Nm
M 30	8.8	1450 Nm
M 36	8.8	2530 Nm
M 42	8.8	4070 Nm
M 48	8.8	6140 Nm
M 56	8.8	9840 Nm

Thread size	Strength class	Tightening torque (with μ = 0.14)
M 6	10.9	14 Nm
M 8	10.9	35 Nm
M 10	10.9	69 Nm
M 12	10.9	120 Nm
M 16	10.9	295 Nm
M 20	10.9	580 Nm
M 24	10.9	1000 Nm
M 30	10.9	2000 Nm
M 36	10.9	3560 Nm
M 42	10.9	5720 Nm
M 48	10.9	8640 Nm
M 56	10.9	13850 Nm

Table 10.2: Tightening torques

Note: Unserviceable screws should be replaced by fresh ones of the same property class and type.

Diese technische Unterlage hat gesetzlichen Schutz (DIN 34)

2.7 Oil-supply unit

See specific instructions for oil-supply unit.

2.8 Gear unit inspection

The gear unit inspection should be entrusted to our Service Division, as by virtue of their experience, our technicians can most reliably assess whether and which parts of the gear unit must be replaced.

3. Lubricants

For lubricants, please refer to Section 12 ”Appendix”.

Diese technische Unterlage hat gesetzlichen Schutz (DIN 34)

Contents

1. **Spare parts stock** 2

2. **Addresses of replacement part suppliers and service organizations** 2

Diese technische Unterlage hat gesetzlichen Schutz (DIN 34)

1. Spare parts stock

A stock of the most important replacement and wearing parts is essential for satisfactory operation and serviceability of the gear unit at all times.

Please use the Spare Parts List for ordering spare parts.

For further information, see the Spare Parts Drawing contained in the Spare Parts List.

Only original replacement parts supplied by us are covered by our warranty.

Caution!

Attention is drawn expressly to the fact that replacement parts and accessories not supplied by us have not been tested or approved by us. Installation and/or use of such products can therefore under certain circumstances alter the structurally specified properties of the gear unit and can as a result impair active and/or passive safety. FLENDER accept no liability of any sort for damage caused by the use of replacement parts and accessories which are not original Flender; their use will invalidate our warranty in every respect.

Please note that special production and supply specifications frequently exist for individual components and that we always supply replacement parts in accordance with the state of the art and the latest legal requirements.

The following data should be stated when ordering replacement parts:

Order No.

Part No.

Quantity

2. Addresses of replacement part suppliers and service organizations

Please use the addresses listed below when ordering replacement parts or requesting a service fitter, please refer to Section 12 ”Appendix”.

Diese technische Unterlage hat gesetzlichen Schutz (DIN 34)

Operating Instructions

BA 7300 EN 01.05

Recommended Lubricants

ADDINOL	ANDEROL® Specialty Lubricants	ARAL	AVIA	BECHEM	BEL-RAY TOTAL PERFORMANCE LUBRICANTS
bp	Brugarolas	B&L	Castrol	CEPSA	cognis
DELTA OIL	Esso	FAG	FLENDER	FRAGOL	FUCHS
FUCHS LUBRITECH	galp energia	KLÖBER LUBRICATION	LE	MEGUIN OILS OF GERMANY	Mobil
MOTOREX	OMV	ORLEN OIL	Petrol Ofisi	Q8	Shell
SRS	STATOIL	TEXACO	TOTAL	SNAP	VECO
Verkol Lubricantes					

FLENDER

A. Friedr. Flender AG · 46393 Bocholt · Tel. 02871/92-0 · Telefax 02871/92-2596 · www.flender.com

Contents

1.	**Lubricants for gear units**	**3**
1.1	Required quality of gear oils	3
1.1.1	Oil groups	4
1.1.2	Oil temperatures	4
1.1.3	General oil service lives	4
1.1.4	Oil change	4
	Table A : Lubricating oils for FLENDER helical-gear, bevel helical-gear and planetary-gear units	5
	Table B : Lubricating oils for FLENDER worm-gear units	14
	Table C : Lubricating oils for FLENDER gear motors	18
1.2	Lubricating greases for gear units and rolling bearings	23
	Table D : Lubricating greases for FLENDER gear units and rolling bearings	23
2.	**Lubricants for ZAPEX couplings**	**25**
2.1	Required oil and grease quality	25
2.1.1	Oil and grease types	25
2.1.2	Oil and grease change	25
	Table E : Lubricating oils and lubricating greases for FLENDER ZAPEX couplings	26

1. Lubricants for gear units

Caution!

This lubricant recommendation does not apply to WINERGY AG gear units.

For **axle drives, marine gearboxes and turbo gear units** also special lubricant recommendations apply.

According to manufacturer's information the gear oils listed in these operating instructions are manufactured and supplied **world-wide** in the above-mentioned quality as required by FLENDER (Exceptions: Observe footnotes in the following tables).

1.1 Required quality of gear oils

For FLENDER gear units, only CLP-quality oils containing active agents to DIN 51 517-3 for increasing corrosion protection and resistance to ageing and for reducing wear in mixed-friction areas are approved. The scuffing resistance in the FZG test to DIN 51354-2 must comply with stage 12 or higher under A/8,3/90 test conditions. In the FE-8 rolling bearing test to DIN 51 819-3 rolling element wear must be under 30 mg and cage wear under 100 mg under test conditions D-7,5/80-80.

In addition, the gear oils must meet the following quality requirements demanded by FLENDER:

- Sufficiently high grey-staining resistance in accordance with FVA 54 grey-staining test
  a) for helical-gear, bevel-gear and planetary-gear units in table A, GS-criteria stage 10 or higher applies, and high grey-staining resistance GST = high
  b) for all other gear units in tables B and C, GS-criteria stage 9 or higher applies
- Low degree of foaming with less than 15 % foam formation in the FLENDER foam test
- Compatibility with elastomer materials of the radial shaft-sealing rings applied in FLENDER gear units
- Compatibility with residues of corrosion-protection agent and run-in oils used by FLENDER
- Compatibility with the paints used by FLENDER in its gear-unit interiors
- Compatibility with liquid seals between bolted-joint surfaces.

For use in worm-gear units moreover:

- Low wear, high pitting resistance and high efficiency (low temperature) in the cylindrical worm-gear unit test

Note: The use of gear oils which do not comply with the above quality requirements invalidate the FLENDER product guarantee obligation. Please note that every oil manufacturer or supplier is responsible for the quality of his product.

Always select the gear oil in accordance with the oil group and viscosity class indicated on the rating plate on the gear unit. If a different viscosity is selected, or oil of a type other than those recommended in these instructions, the operator assumes the responsibility for its technical suitability. In order to minimise the technical risk in such a case, the oil applied must be at least CLP oil quality to DIN 51 517-3, which should be confirmed by the oil manufacturer.

Caution!

The oil group and oil viscosity indicated on the rating plates as well as the instructions in the gear-unit operating instructions must be adhered to.

Deviations are permitted only after consultation with FLENDER!

1.1.1 Oil groups

In tables A, B and C five oil groups are distinguished:

- Mineral oils (MIN oil)
- Polyglycol (PG oil)
- Poly-α olefin (PAO oil)
- Biologically degradable oils (BIO oil)
- Physiologically safe oils approved in accordance with USDA H1 (PHY oil).

1.1.2 Oil temperatures

The synthetic oils have a wider temperature range and a higher viscosity index (i.e. a flatter viscosity-temperature gradient) than the mineral oils. Guideline values for temperature range:

mineral oils approx. –10 °C to +90 °C (short term +100 °C);
polyglycols and poly-α olefins approx. –20 °C to +100 °C (short term +110 °C);
bio-degradable oils (synthetic Ester) approx. –15 to +90 °C.

Note: The upper and lower operating temperatures of certain gear oils may deviate widely from the values indicated. For operating conditions outside the above mentioned temperature ranges, the flash point and pour point of the oils must be observed. For these and other data and properties of the gear oils, refer to the oil manufacturers' technical data sheets (to this purpose Flender must be consulted).

1.1.3 General oil service lives

According to the manufacturers, the following are the minimum periods during which the oils can be used without undergoing any significant change in quality. They are calculated on the basis of an average oil temperature of 80 °C:

– mineral oils, bio-degradable oils and physiologically safe oils: 2 years or 10 000 hours of service

– for poly-α olefins and polyglycols: 4 years or 20 000 hours of service.

Note: The actual service lives may be higher or lower (for temperatures over 80 °C). The general rule is that an increase in temperature of 10 K will halve the service life.

1.1.4 Oil change

The degree of purity of the oil affects the operating reliability and life span of the oil and the gear unit. It should therefore be ensured that the oil in the gear unit is clean. For the first oil change after start-up and for subsequent oil changes, the specifications in the gear-unit operating instructions must be observed. In the case of larger oil quantities, an analysis should be carried out before cleaning or changing the oil.

When changing oil of the same type, the quantity of oil remaining in the gear unit should be kept as low as possible. Generally speaking, a small remaining quantity will cause no particular problems. Gear oils of different types and manufacturers must not be mixed. If necessary, the manufacturer should confirm that the new oil is compatible with residues of the old oil. When changing to very different types of oil or oils with very different additives, especially when changing from polyglycols to another gear oil or vice versa, the gear unit must always be well flushed out with the new oil. Residues of old oil must be completely removed from the gear unit.

Caution! **Gear oils must never be mixed with other substances. Flushing with paraffin or other solvents is not permitted, as traces of these substances always remain inside the unit.**

Table A Lubricant	Code no.	Viscosity ISO-VG DIN 51519 at 40 °C (mm^2/s)	Lubricating oils for FLENDER helical-gear, bevel helical-gear and planetary-gear units			
			ADDINOL	ANDEROL® Specialty Lubricants	ARAL	AVIA
Mineral oils (MIN oil)	A11	VG 1000				
	A12	VG 680	CLP 680 S ECO GEAR 680 M		Degol BG 680 Plus Degol BMB 680 1)	GEAR RSX 680
	A13	VG 460	CLP 460 S ECO GEAR 460 M		Degol BG 460 Plus Degol BMB 460 1)	GEAR RSX 460
	A14	VG 320	CLP 320 S ECO GEAR 320 M		Degol BG 320 Plus Degol BMB 320 1)	GEAR RSX 320
	A15	VG 220	CLP 220 S ECO GEAR 220 M		Degol BG 220 Plus Degol BMB 220 1)	GEAR RSX 220
	A16	VG 150	CLP 150 S ECO GEAR 150 M		Degol BG 150 Plus Degol BMB 150 1)	GEAR RSX 150
	A17	VG 100	ECO GEAR 100 M		Degol BG 100 Plus Degol BMB 100 1)	GEAR RSX 100
Polyglycol (PG oil)	A21	VG 1000			Degol GS 1000	
	A22	VG 680			Degol GS 680	GEAR VSG 680
	A23	VG 460			Degol GS 460	GEAR VSG 460
	A24	VG 320			Degol GS 320	GEAR VSG 320
	A25	VG 220			Degol GS 220	GEAR VSG 220
	A26	VG 150			Degol GS 150	GEAR VSG 150
	A27	VG 100				GEAR VSG 100
Poly-α-olefin (PAO oil)	A31	VG 1000		4111 XEP 5999 XEP		SYNTOGEAR PE 1000
	A32	VG 680	ECO GEAR 680 S	4680 XEP 5680 XEP		SYNTOGEAR PE 680 EVOGEAR SX 680
	A33	VG 460	ECO GEAR 460 S	4460 XEP 5460 XEP	Degol PAS 460	SYNTOGEAR PE 460 EVOGEAR SX 460
	A34	VG 320	ECO GEAR 320 S	4320 XEP 5320 XEP	Degol PAS 320	SYNTOGEAR PE 320 EVOGEAR SX 320
	A35	VG 220	ECO GEAR 220 S	4220 XEP 5220 XEP	Degol PAS 220	SYNTOGEAR PE 220 EVOGEAR SX 220
	A36	VG 150	ECO GEAR 150 S	4150 XEP 5150 XEP	Degol PAS 150	SYNTOGEAR PE 150
	A37	VG 100	ECO GEAR 100 S	4100 XEP		SYNTOGEAR PE 100
Biologically degradable oils (BIO oil)	A41	VG 1000				
	A42	VG 680				
	A43	VG 460				
	A44	VG 320				
	A45	VG 220				
	A46	VG 150				
	A47	VG 100				
Physiologically safe oils (PHY oil)	A51	VG 1000				
	A52	VG 680				
	A53	VG 460				
	A54	VG 320				
	A55	VG 220				
	A56	VG 150				
	A57	VG 100				

1) with solid content MoS_2

Table A Lubricant	Code no.	Viscosity ISO-VG DIN 51519 at 40 °C (mm^2/s)	Lubricating oils for FLENDER helical-gear, bevel helical-gear and planetary-gear units			
			BECHEM	BEL-RAY TOTAL PERFORMANCE LUBRICANTS	bp	Brugarolas
Mineral oils (MIN oil)	A11	VG 1000				Beslux Gear XP 1000
	A12	VG 680			Energol GR-XF 680	Beslux Gear XP 680
	A13	VG 460			Energol GR-XF 460	Beslux Gear XP 460
	A14	VG 320			Energol GR-XF 320	Beslux Gear XP 320
	A15	VG 220			Energol GR-XF 220	Beslux Gear XP 220
	A16	VG 150			Energol GR-XF 150	
	A17	VG 100				
Polyglycol (PG oil)	A21	VG 1000				Beslux Sincart W 1000
	A22	VG 680	BERUSYNTH EP 680		Enersyn SG-XP 680	Beslux Sincart W 680
	A23	VG 460	BERUSYNTH EP 460		Enersyn SG-XP 460	Beslux Sincart W 460
	A24	VG 320	BERUSYNTH EP 320		Enersyn SG-XP 320	Beslux Sincart W 320
	A25	VG 220	BERUSYNTH EP 220		Enersyn SG-XP 220	Beslux Sincart W 220
	A26	VG 150	BERUSYNTH EP 150		Enersyn SG-XP 150	Beslux Sincart W 150
	A27	VG 100	BERUSYNTH EP 100		Enersyn SG-XP 100	
Poly-α-olefin (PAO oil)	A31	VG 1000		Bel-Ray Synth. Gear Oil 6698		Beslux Gearsint XP 1000
	A32	VG 680		Bel-Ray Synth. Gear Oil 6696		Beslux Gearsint XP 680
	A33	VG 460		Bel-Ray Synth. Gear Oil 6694	Enersyn EP-XF 460	Beslux Gearsint XP 460
	A34	VG 320		Bel-Ray Synth. Gear Oil 6692	Enersyn EP-XF 320	Beslux Gearsint XP 320
	A35	VG 220		Bel-Ray Synth. Gear Oil 6690	Enersyn EP-XF 220	Beslux Gearsint XP 220
	A36	VG 150		Bel-Ray Synth. Gear Oil 6688	Enersyn EP-XF 150	Beslux Gearsint XP 150
	A37	VG 100			Enersyn EP-XF 100	
Biologically degradable oils (BIO oil)	A41	VG 1000				
	A42	VG 680				
	A43	VG 460				
	A44	VG 320				
	A45	VG 220				
	A46	VG 150				
	A47	VG 100				
Physiologically safe oils (PHY oil)	A51	VG 1000				
	A52	VG 680				
	A53	VG 460				
	A54	VG 320				
	A55	VG 220				
	A56	VG 150				
	A57	VG 100				

Table A Lubricant	Code no.	Viscosity ISO-VG DIN 51519 at 40 °C (mm^2/s)	Lubricating oils for FLENDER helical-gear, bevel helical-gear and planetary-gear units			
			B&L	Castrol classic	Castrol performance	CEPSA
Mineral oils (MIN oil)	A11	VG 1000		Alpha SP 1000	Optigear BM 1000 Tribol 1100 / 1000	CEPSA AEROGEAR 1000
	A12	VG 680		Alpha SP 680	Optigear BM 680 Tribol 1100 / 680	CEPSA AEROGEAR 680
	A13	VG 460		Alpha SP 460 Alpha MAX 460	Optigear BM 460 Tribol 1100 / 460	CEPSA AEROGEAR 460
	A14	VG 320		Alpha SP 320 Alpha MAX 320	Optigear BM 320 Tribol 1100 / 320	CEPSA AEROGEAR 320
	A15	VG 220		Alpha SP 220 Alpha MAX 220	Optigear BM 220 Tribol 1100 / 220	CEPSA AEROGEAR 220
	A16	VG 150		Alpha SP 150 Alpha MAX 150	Optigear BM 150 Tribol 1100 / 150	
	A17	VG 100		Alpha SP 100 Alpha MAX 100	Optigear BM 100 Tribol 1100 / 100	
Polyglycol (PG oil)	A21	VG 1000			Tribol 800 / 1000	
	A22	VG 680			Tribol 800 / 680	
	A23	VG 460			Tribol 800 / 460	
	A24	VG 320			Tribol 800 / 320	
	A25	VG 220			Tribol 800 / 220	
	A26	VG 150			Tribol 800 / 150	
	A27	VG 100			Tribol 800 / 100	
Poly-α-olefin (PAO oil)	A31	VG 1000				
	A32	VG 680		Alphasyn EP 680		AEROGEAR SYNT 680
	A33	VG 460		Optigear Synth. A 460 Alphasyn EP 460	Optigear Synth. X 460 Tribol 1710 / 460	AEROGEAR SYNT 460
	A34	VG 320		Optigear Synth. A 320 Alphasyn EP 320	Optigear Synth. X 320 Tribol 1710 / 320	AEROGEAR SYNT 320
	A35	VG 220		Optigear Synth. A 220 Alphasyn EP 220	Optigear Synth. X 220 Tribol 1710 / 220	AEROGEAR SYNT 220
	A36	VG 150		Alphasyn EP 150		
	A37	VG 100				
Biologically degradable oils (BIO oil)	A41	VG 1000				
	A42	VG 680	RIVOLTA S.G.L. 680			
	A43	VG 460			Tribol BioTop 1418 / 460	
	A44	VG 320	RIVOLTA S.G.L. 320		Tribol BioTop 1418 / 320	
	A45	VG 220	RIVOLTA S.G.L. 220		Tribol BioTop 1418 / 220	
	A46	VG 150			Tribol BioTop 1418 / 150	
	A47	VG 100	RIVOLTA S.G.L. 100			
Physiologically safe oils (PHY oil)	A51	VG 1000				
	A52	VG 680			Optileb GT 680	
	A53	VG 460			Optileb GT 460	
	A54	VG 320			Optileb GT 320	
	A55	VG 220			Optileb GT 220	
	A56	VG 150			Optileb GT 150	
	A57	VG 100			Optileb GT 100	

Table A			Lubricating oils for FLENDER helical-gear, bevel helical-gear and planetary-gear units			
Lubricant	Code no.	**Viscosity** ISO-VG DIN 51519 at 40 °C (mm^2/s)	cognis	DELTA OIL	Esso	FUCHS
Mineral oils (MIN oil)	A11	VG 1000				RENOLIN CLP1000 PLUS
	A12	VG 680			SPARTAN EP 680 3)	RENOLIN CLP 680 / RENOLIN CLP 680 PLUS
	A13	VG 460		EP Industrial G 460	SPARTAN EP 460 3)	RENOLIN CLP 460 / RENOLIN CLP 460 PLUS
	A14	VG 320		EP Industrial G 320	SPARTAN EP 320 3)	RENOLIN CLP 320 / RENOLIN CLP 320 PLUS
	A15	VG 220		EP Industrial G 220	SPARTAN EP 220 3)	RENOLIN CLP 220 / RENOLIN CLP 220 PLUS
	A16	VG 150			SPARTAN EP 150 3)	RENOLIN CLP 150 / RENOLIN CLP 150 PLUS
	A17	VG 100			SPARTAN EP 100 3)	RENOLIN CLP 100 / RENOLIN CLP 100 PLUS
Polyglycol (PG oil)	A21	VG 1000	Breox SL 1000			RENOLIN PG 1000
	A22	VG 680	Breox SL 680			RENOLIN PG 680
	A23	VG 460	Breox SL 460			RENOLIN PG 460
	A24	VG 320	Breox SL 320			RENOLIN PG 320
	A25	VG 220	Breox SL 220			RENOLIN PG 220
	A26	VG 150	Breox SL 150			RENOLIN PG 150
	A27	VG 100				RENOLIN PG 100
Poly-α-olefin (PAO oil)	A31	VG 1000				
	A32	VG 680				RENOLIN UNISYN CLP 680
	A33	VG 460				RENOLIN UNISYN CLP 460
	A34	VG 320				RENOLIN UNISYN CLP 320
	A35	VG 220				RENOLIN UNISYN CLP 220
	A36	VG 150				RENOLIN UNISYN CLP 150
	A37	VG 100				RENOLIN UNISYN CLP 100
Biologically degradable oils (BIO oil)	A41	VG 1000				PLANTOGEAR 1000 S
	A42	VG 680				PLANTOGEAR 680 S
	A43	VG 460				PLANTOGEAR 460 S
	A44	VG 320				PLANTOGEAR 320 S
	A45	VG 220				PLANTOGEAR 220 S
	A46	VG 150				PLANTOGEAR 150 S
	A47	VG 100				PLANTOGEAR 100 S
Physiologically safe oils (PHY oil)	A51	VG 1000	Breox FGL 1000 2)			
	A52	VG 680	Breox FGL 680 2)			
	A53	VG 460	Breox FGL 460 2)			
	A54	VG 320	Breox FGL 320 2)			
	A55	VG 220	Breox FGL 220 2)			
	A56	VG 150	Breox FGL 150 2)			
	A57	VG 100				

2) PG oil
3) ESSO guarantees the qualities required by FLENDER only for products from Europe

Table A			Lubricating oils for FLENDER helical-gear, bevel helical-gear and planetary-gear units			
Lubricant	Code no.	**Viscosity** ISO-VG DIN 51519 at 40 °C (mm^2/s)	FUCHS LUBRITECH	FRAGOL	galp energia	KLÜBER LUBRICATION
Mineral oils (MIN oil)	A11	VG 1000	GEARMASTER CLP 1000			
	A12	VG 680	GEARMASTER CLP 680			Klüberoil GEM 1 - 680 N
	A13	VG 460	GEARMASTER CLP 460			Klüberoil GEM 1 - 460 N
	A14	VG 320	GEARMASTER CLP 320			Klüberoil GEM 1 - 320 N
	A15	VG 220	GEARMASTER CLP 220			Klüberoil GEM 1 - 220 N
	A16	VG 150	GEARMASTER CLP 150			Klüberoil GEM 1 - 150 N
	A17	VG 100	GEARMASTER CLP 100			Klüberoil GEM 1 - 100 N
Polyglycol (PG oil)	A21	VG 1000	GEARMASTER PGP 1000	Ucolub BSL-IG 1000		Klübersynth. GH 6 - 1000
	A22	VG 680	GEARMASTER PGP 680	Ucolub BSL-IG 680		Klübersynth. GH 6 - 680
	A23	VG 460	GEARMASTER PGP 460	Ucolub BSL-IG 460		Klübersynth. GH 6 - 460
	A24	VG 320	GEARMASTER PGP 320	Ucolub BSL-IG 320		Klübersynth. GH 6 - 320
	A25	VG 220	GEARMASTER PGP 220	Ucolub BSL-IG 220		Klübersynth. GH 6 - 220
	A26	VG 150	GEARMASTER PGP 150	Ucolub BSL-IG 150		Klübersynth. GH 6 - 150
	A27	VG 100	GEARMASTER PGP 100	Ucolub BSL-IG 100		
Poly-α-olefin (PAO oil)	A31	VG 1000	GEARMASTER SYN 1000			
	A32	VG 680	GEARMASTER SYN 680			Klübersynth. GEM 4 - 680 N
	A33	VG 460	GEARMASTER SYN 460	Ucolub N-PA 460	Galp Transgear SMP 460	Klübersynth. GEM 4 - 460 N
	A34	VG 320	GEARMASTER SYN 320	Ucolub N-PA 320	Galp Transgear SMP 320	Klübersynth. GEM 4 - 320 N
	A35	VG 220	GEARMASTER SYN 220	Ucolub N-PA 220	Galp Transgear SMP 220	Klübersynth. GEM 4 - 220 N
	A36	VG 150	GEARMASTER SYN 150		Galp Transgear SMP 150	Klübersynth. GEM 4 - 150 N
	A37	VG 100	GEARMASTER SYN 100			
Biologically degradable oils (BIO oil)	A41	VG 1000	GEARMASTER ECO 1000			
	A42	VG 680	GEARMASTER ECO 680			
	A43	VG 460	GEARMASTER ECO 460			
	A44	VG 320	GEARMASTER ECO 320			Klübersynth. GEM 2 - 320
	A45	VG 220	GEARMASTER ECO 220			Klübersynth. GEM 2 - 220
	A46	VG 150	GEARMASTER ECO 150			
	A47	VG 100	GEARMASTER ECO 100			
Physiologically safe oils (PHY oil)	A51	VG 1000		Ucolub BSL 1000 4)		
	A52	VG 680		Ucolub BSL 680 4)		
	A53	VG 460		Ucolub BSL 460 4)		
	A54	VG 320		Ucolub BSL 320 4)		
	A55	VG 220		Ucolub BSL 220 4)		
	A56	VG 150		Ucolub BSL 150 4)		
	A57	VG 100				

4) PG oil

Table A Lubricant	Code no.	Viscosity ISO-VG DIN 51519 at 40 °C (mm^2/s)	Lubricating oils for FLENDER helical-gear, bevel helical-gear and planetary-gear units			
				MEGUIN OILS OF GERMANY	Mobil	MOTOREX
Mineral oils (MIN oil)	A11	VG 1000				GEAR COMPOUND PLUS 1000
	A12	VG 680	609 ALMASOL Vari-Purpose Gear Lubricant		Mobilgear XMP 680	GEAR COMPOUND PLUS 680
	A13	VG 460	608 ALMASOL Vari-Purpose Gear Lubricant		Mobilgear XMP 460	GEAR COMPOUND PLUS 460
	A14	VG 320	605 ALMASOL Vari-Purpose Gear Lubricant		Mobilgear XMP 320	GEAR COMPOUND PLUS 320
	A15	VG 220	607 ALMASOL Vari-Purpose Gear Lubricant		Mobilgear XMP 220	GEAR COMPOUND PLUS 220
	A16	VG 150	604 ALMASOL Vari-Purpose Gear Lubricant		Mobilgear XMP 150	GEAR COMPOUND PLUS 150
	A17	VG 100	606 ALMASOL Vari-Purpose Gear Lubricant		Mobilgear XMP 100	GEAR COMPOUND PLUS 100
Polyglycol (PG oil)	A21	VG 1000				
	A22	VG 680				
	A23	VG 460				
	A24	VG 320				
	A25	VG 220				
	A26	VG 150				
	A27	VG 100				
Poly-α-olefin (PAO oil)	A31	VG 1000			Mobil SHC 639	GEAR SINTEC CLP 1000
	A32	VG 680		megol Gearoil Synth 680	Mobilgear SHC XMP680	GEAR SINTEC CLP 680
	A33	VG 460		megol Gearoil Synth 460	Mobil SHC 634 Mobilgear SHC XMP460	GEAR SINTEC CLP 460
	A34	VG 320		megol Gearoil Synth 320	Mobil SHC 632 Mobilgear SHC XMP320	GEAR SINTEC CLP 320
	A35	VG 220		megol Gearoil Synth 220	Mobil SHC 630 Mobilgear SHC XMP220	GEAR SINTEC CLP 220
	A36	VG 150			Mobil SHC 629 Mobilgear SHC XMP150	GEAR SINTEC CLP 150
	A37	VG 100				GEAR SINTEC CLP 100
Biologically degradable oils (BIO oil)	A41	VG 1000				
	A42	VG 680				
	A43	VG 460				
	A44	VG 320				
	A45	VG 220				
	A46	VG 150				
	A47	VG 100				
Physiologically safe oils (PHY oil)	A51	VG 1000				
	A52	VG 680				
	A53	VG 460				
	A54	VG 320				
	A55	VG 220				
	A56	VG 150				
	A57	VG 100				

Table A			Lubricating oils for FLENDER helical-gear, bevel helical-gear and planetary-gear units			
Lubricant	Code no.	**Viscosity** ISO-VG DIN 51519 at 40 °C (mm^2/s)	OMV	ORLEN OIL	Petrol Ofisi	Q8
Mineral oils (MIN oil)	A11	VG 1000	OMV gear HST 1000		PO Gravis MP 1000	
	A12	VG 680	OMV gear HST 680	TRANSOL PREMIUM 680	PO Gravis MP 680	
	A13	VG 460	OMV gear HST 460	TRANSOL PREMIUM 460	PO Gravis MP 460	
	A14	VG 320	OMV gear HST 320	TRANSOL PREMIUM 320	PO Gravis MP 320	Q8 Goya NT 320
	A15	VG 220	OMV gear HST 220	TRANSOL PREMIUM 220	PO Gravis MP 220	Q8 Goya NT 220
	A16	VG 150	OMV gear HST 150		PO Gravis MP 150	Q8 Goya NT 150
	A17	VG 100	OMV gear HST 100		PO Gravis MP 100	
Polyglycol (PG oil)	A21	VG 1000				
	A22	VG 680				
	A23	VG 460				
	A24	VG 320				
	A25	VG 220				
	A26	VG 150				
	A27	VG 100				
Poly-α-olefin (PAO oil)	A31	VG 1000		TRANSGEAR PE 1000	PO Gravis SP 1000	
	A32	VG 680		TRANSGEAR PE 680	PO Gravis SP 680	
	A33	VG 460		TRANSGEAR PE 460	PO Gravis SP 460	Q8 El Greco 460
	A34	VG 320		TRANSGEAR PE 320	PO Gravis SP 320	Q8 El Greco 320
	A35	VG 220		TRANSGEAR PE 220	PO Gravis SP 220	Q8 El Greco 220
	A36	VG 150				Q8 El Greco 150
	A37	VG 100				
Biologically degradable oils (BIO oil)	A41	VG 1000				
	A42	VG 680				
	A43	VG 460				
	A44	VG 320				
	A45	VG 220				
	A46	VG 150				
	A47	VG 100				
Physiologically safe oils (PHY oil)	A51	VG 1000				
	A52	VG 680				
	A53	VG 460				
	A54	VG 320				
	A55	VG 220				
	A56	VG 150				
	A57	VG 100				

Table A Lubricant	Code no.	Viscosity ISO-VG DIN 51519 at 40 °C (mm^2/s)	Lubricating oils for FLENDER helical-gear, bevel helical-gear and planetary-gear units			
			Shell	STATOIL	TEXACO	TOTAL
Mineral oils (MIN oil)	A11	VG 1000				KASSILLA GMP 1000 CARTER EP 1000
	A12	VG 680		LoadWay EP 680		KASSILLA GMP 680 CARTER EP 680
	A13	VG 460	Shell Omala F 460	LoadWay EP 460	Meropa WM 460 Auriga EP 460	KASSILLA GMP 460 CARTER EP 460
	A14	VG 320	Shell Omala F 320	LoadWay EP 320	Meropa WM 320 Auriga EP 320	KASSILLA GMP 320 CARTER EP 320
	A15	VG 220	Shell Omala F 220	LoadWay EP 220	Meropa WM 220 Auriga EP 220	KASSILLA GMP 220 CARTER EP 220
	A16	VG 150			Meropa WM 150 Auriga EP 150	
	A17	VG 100			Meropa WM 100 Auriga EP 100	
Polyglycol (PG oil)	A21	VG 1000	Shell Tivela S 1000 Shell Cassida WG 1000			
	A22	VG 680	Shell Tivela S 680 Shell Cassida WG 680			
	A23	VG 460	Shell Tivela S 460 Shell Cassida WG 460			
	A24	VG 320	Shell Tivela S 320 Shell Cassida WG 320			
	A25	VG 220	Shell Tivela S 220 Shell Cassida WG 220			
	A26	VG 150	Shell Tivela S 150 Shell Cassida WG 150			
	A27	VG 100				
Poly-α-olefin (PAO oil)	A31	VG 1000				CARTER SH 1000
	A32	VG 680	Shell Omala HD 680			CARTER SH 680
	A33	VG 460	Shell Omala HD 460			CARTER SH 460
	A34	VG 320	Shell Omala HD 320	MERETA 320		CARTER SH 320
	A35	VG 220	Shell Omala HD 220	MERETA 220		CARTER SH 220
	A36	VG 150	Shell Omala HD 150	MERETA 150		CARTER SH 150
	A37	VG 100				
Biologically degradable oils (BIO oil)	A41	VG 1000				
	A42	VG 680				
	A43	VG 460	Shell Omala EPB 460			
	A44	VG 320	Shell Omala EPB 320			
	A45	VG 220	Shell Omala EPB 220			
	A46	VG 150	Shell Omala EPB 150			
	A47	VG 100	Shell Omala EPB 100			
Physiologically safe oils (PHY oil)	A51	VG 1000	Shell Cassida WG 1000 5)			
	A52	VG 680	Shell Cassida WG 680 5)			
	A53	VG 460	Shell Cassida WG 460 5)			Keystone Nevastane SY 460 5)
	A54	VG 320	Shell Cassida WG 320 5)			Keystone Nevastane SY 320 5)
	A55	VG 220	Shell Cassida WG 220 5)			Keystone Nevastane SY 220 5)
	A56	VG 150				
	A57	VG 100				

5) PG oil

Table A Lubricant	Code no.	Viscosity ISO-VG DIN 51519 at 40 °C (mm^2/s)	Lubricating oils for FLENDER helical-gear, bevel helical-gear and planetary-gear units			
Mineral oils (MIN oil)	A11	VG 1000		VECO MATRANOL XP 1000		
	A12	VG 680	TUNGEAR 680 6)	VECO MATRANOL XP 680	COMPOUND MP 680	
	A13	VG 460	TUNGEAR 460 6)	VECO MATRANOL XP 460	COMPOUND MP 460	
	A14	VG 320	TUNGEAR 320 6)	VECO MATRANOL XP 320	COMPOUND MP 320	
	A15	VG 220	TUNGEAR 220 6)	VECO MATRANOL XP 220	COMPOUND MP 220	
	A16	VG 150			COMPOUND MP 150	
	A17	VG 100				
Polyglycol (PG oil)	A21	VG 1000				
	A22	VG 680				
	A23	VG 460				
	A24	VG 320				
	A25	VG 220				
	A26	VG 150				
	A27	VG 100				
Poly-α-olefin (PAO oil)	A31	VG 1000				
	A32	VG 680				
	A33	VG 460				
	A34	VG 320				
	A35	VG 220				
	A36	VG 150				
	A37	VG 100				
Biologically degradable oils (BIO oil)	A41	VG 1000				
	A42	VG 680				
	A43	VG 460				
	A44	VG 320				
	A45	VG 220				
	A46	VG 150				
	A47	VG 100				
Physiologically safe oils (PHY oil)	A51	VG 1000				
	A52	VG 680				
	A53	VG 460				
	A54	VG 320				
	A55	VG 220				
	A56	VG 150				
	A57	VG 100				

6) TUNGEAR is approved for Brazil under the name of GEAROIL in VG 220, 320, 460 and 680. Distributor: TRIBOTECHNICA Lubrificantes Sinteticos Sao Paulo.
TUNGEAR is approved for India under the name of Mox-Active Gear oil in VG 220, 320 and 460. Distributor: OKS Speciality Lubricants Bombay.

Table B Lubricant	Code no.	Viscosity ISO-VG DIN 51519 at 40 °C (mm^2/s)	Lubricating oils for FLENDER worm-gear units			
			ARAL	AVIA	BECHEM	bp
Mineral oils (MIN oil)	B11	VG 1000				Energol GR-XP 1000
	B12	VG 680	Degol BG 680			Energol GR-XP 680
	B13	VG 460	Degol BG 460			Energol GR-XP 460
	B14	VG 320	Degol BG 320			Energol GR-XP 320
	B15	VG 220	Degol BG 220			Energol GR-XP 220
	B16	VG 150	Degol BG 150			Energol GR-XP 150
	B17	VG 100	Degol BG 100			Energol GR-XP 100
Polyglycol (PG oil)	B21	VG 1000	Degol GS 1000			
	B22	VG 680	Degol GS 680	GEAR VSG 680	BERUSYNTH EP 680	Enersyn SG-XP 680
	B23	VG 460	Degol GS 460	GEAR VSG 460	BERUSYNTH EP 460	Enersyn SG-XP 460
	B24	VG 320	Degol GS 320	GEAR VSG 320	BERUSYNTH EP 320	Enersyn SG-XP 320
	B25	VG 220	Degol GS 220	GEAR VSG 220	BERUSYNTH EP 220	Enersyn SG-XP 220
	B26	VG 150	Degol GS 150	GEAR VSG 150	BERUSYNTH EP 150	Enersyn SG-XP 150
	B27	VG 100		GEAR VSG 100	BERUSYNTH EP 100	Enersyn SG-XP 100
Poly-α-olefin (PAO oil)	B31	VG 1000				
	B32	VG 680				
	B33	VG 460				
	B34	VG 320				
	B35	VG 220				
	B36	VG 150				
	B37	VG 100				
Biologically degradable oils (BIO oil)	B41	VG 1000				
	B42	VG 680				
	B43	VG 460				
	B44	VG 320				
	B45	VG 220				
	B46	VG 150				
	B47	VG 100				
Physiologically safe oils (PHY oil)	B51	VG 1000				
	B52	VG 680				
	B53	VG 460				
	B54	VG 320				
	B55	VG 220				
	B56	VG 150				
	B57	VG 100				

Table B			Lubricating oils for FLENDER worm-gear units			
Lubricant	Code no.	**Viscosity** ISO-VG DIN 51519 at 40 °C (mm^2/s)	Castrol performance	cognis	Esso	FUCHS
Mineral oils (MIN oil)	B11	VG 1000	Optigear BM 1000 / Tribol 1100 / 1000			
	B12	VG 680	Optigear BM 680 / Tribol 1100 / 680		SPARTAN EP 680 1)	
	B13	VG 460	Optigear BM 460 / Tribol 1100 / 460		SPARTAN EP 460 1)	
	B14	VG 320	Optigear BM 320 / Tribol 1100 / 320		SPARTAN EP 320 1)	
	B15	VG 220	Optigear BM 220 / Tribol 1100 / 220		SPARTAN EP 220 1)	
	B16	VG 150	Optigear BM 150 / Tribol 1100 / 150		SPARTAN EP 150 1)	
	B17	VG 100	Optigear BM 100 / Tribol 1100 / 100		SPARTAN EP 100 1)	
Polyglycol (PG oil)	B21	VG 1000	Optiflex A 1000 / Tribol 800 / 1000	Breox SL 1000		RENOLIN PG 1000
	B22	VG 680	Optiflex A 680 / Tribol 800 / 680	Breox SL 680		RENOLIN PG 680
	B23	VG 460	Optiflex A 460 / Tribol 800 / 460	Breox SL 460		RENOLIN PG 460
	B24	VG 320	Optiflex A 320 / Tribol 800 / 320	Breox SL 320		RENOLIN PG 320
	B25	VG 220	Optiflex A 220 / Tribol 800 / 220	Breox SL 220		RENOLIN PG 220
	B26	VG 150	Optiflex A 150 / Tribol 800 / 150	Breox SL 150		RENOLIN PG 150
	B27	VG 100	Optiflex A 100 / Tribol 800 / 100			RENOLIN PG 100
Poly-α-olefin (PAO oil)	B31	VG 1000				
	B32	VG 680				
	B33	VG 460				
	B34	VG 320				
	B35	VG 220				
	B36	VG 150				
	B37	VG 100				
Biologically degradable oils (BIO oil)	B41	VG 1000				
	B42	VG 680				
	B43	VG 460				
	B44	VG 320				
	B45	VG 220				
	B46	VG 150				
	B47	VG 100				
Physiologically safe oils (PHY oil)	B51	VG 1000		Breox FGL 1000 2)		
	B52	VG 680	Tribol FoodProof 1800 / 680 2)	Breox FGL 680 2)		
	B53	VG 460	Tribol FoodProof 1800 / 460 2)	Breox FGL 460 2)		
	B54	VG 320	Tribol FoodProof 1800 / 320 2)	Breox FGL 320 2)		
	B55	VG 220	Tribol FoodProof 1800 / 220 2)	Breox FGL 220 2)		
	B56	VG 150		Breox FGL 150 2)		
	B57	VG 100				

1) ESSO guarantees the qualities required by FLENDER only for products from Europe
2) PG oil

Table B			Lubricating oils for FLENDER worm-gear units			
Lubricant	Code no.	**Viscosity** ISO-VG DIN 51519 at 40 °C (mm^2/s)	FUCHS LUBRITECH	KLÜBER LUBRICATION	Mobil	Shell
Mineral oils (MIN oil)	B11	VG 1000				
	B12	VG 680		Klüberoil GEM 1 - 680 N	Mobilgear 636 / Mobilgear XMP 680	
	B13	VG 460		Klüberoil GEM 1 - 460 N	Mobilgear 634 / Mobilgear XMP 460	
	B14	VG 320		Klüberoil GEM 1 - 320 N	Mobilgear 632 / Mobilgear XMP 320	
	B15	VG 220		Klüberoil GEM 1 - 220 N	Mobilgear 630 / Mobilgear XMP 220	
	B16	VG 150		Klüberoil GEM 1 - 150 N	Mobilgear 629 / Mobilgear XMP 150	
	B17	VG 100		Klüberoil GEM 1 - 100 N	Mobilgear 627 / Mobilgear XMP 100	
Polyglycol (PG oil)	B21	VG 1000	GEARMASTER PGP 1000	SYNTHESO D 1000 EP		Shell Tivela S 1000 / Shell Cassida WG 1000
	B22	VG 680	GEARMASTER PGP 680	SYNTHESO D 680 EP		Shell Tivela S 680 / Shell Cassida WG 680
	B23	VG 460	GEARMASTER PGP 460	SYNTHESO D 460 EP		Shell Tivela S 460 / Shell Cassida WG 460
	B24	VG 320	GEARMASTER PGP 320	SYNTHESO D 320 EP		Shell Tivela S 320 / Shell Cassida WG 320
	B25	VG 220	GEARMASTER PGP 220	SYNTHESO D 220 EP		Shell Tivela S 220 / Shell Cassida WG 220
	B26	VG 150	GEARMASTER PGP 150	SYNTHESO D 150 EP		Shell Tivela S 150
	B27	VG 100	GEARMASTER PGP 100	SYNTHESO D 100 EP		
Poly-α-olefin (PAO oil)	B31	VG 1000				
	B32	VG 680				
	B33	VG 460				
	B34	VG 320				
	B35	VG 220				
	B36	VG 150				
	B37	VG 100				
Biologically degradable oils (BIO oil)	B41	VG 1000				
	B42	VG 680				
	B43	VG 460				
	B44	VG 320				
	B45	VG 220				
	B46	VG 150				
	B47	VG 100				
Physiologically safe oils (PHY oil)	B51	VG 1000				Shell Cassida WG 1000 3)
	B52	VG 680				Shell Cassida WG 680 3)
	B53	VG 460				Shell Cassida WG 460 3)
	B54	VG 320				Shell Cassida WG 320 3)
	B55	VG 220				Shell Cassida WG 220 3)
	B56	VG 150				
	B57	VG 100				

3) PG oil

Table B			Lubricating oils for FLENDER worm-gear units			
Lubricant	Code no.	**Viscosity** ISO-VG DIN 51519 at 40 °C (mm^2/s)	SRS			
Mineral oils (MIN oil)	B11	VG 1000				
	B12	VG 680	Ersolan 680			
	B13	VG 460	Ersolan 460			
	B14	VG 320	Ersolan 320			
	B15	VG 220	Ersolan 220			
	B16	VG 150	Ersolan 150			
	B17	VG 100	Ersolan 100			
Polyglycol (PG oil)	B21	VG 1000				
	B22	VG 680				
	B23	VG 460				
	B24	VG 320				
	B25	VG 220				
	B26	VG 150				
	B27	VG 100				
Poly-α-olefin (PAO oil)	B31	VG 1000				
	B32	VG 680				
	B33	VG 460				
	B34	VG 320				
	B35	VG 220				
	B36	VG 150				
	B37	VG 100				
Biologically degradable oils (BIO oil)	B41	VG 1000				
	B42	VG 680				
	B43	VG 460				
	B44	VG 320				
	B45	VG 220				
	B46	VG 150				
	B47	VG 100				
Physiologically safe oils (PHY oil)	B51	VG 1000				
	B52	VG 680				
	B53	VG 460				
	B54	VG 320				
	B55	VG 220				
	B56	VG 150				
	B57	VG 100				

Table C Lubricant	Code no.	Viscosity ISO-VG DIN 51519 at 40 °C (mm^2/s)	Lubricating oils for FLENDER gear motors			
			ADDINOL	ANDEROL® Specialty Lubricants	ARAL	AVIA
Mineral oils (MIN oil)	C15	VG 220	CLP 220 S ECO GEAR 220 M		Degol BG 220 Plus Degol BG 220 1)	GEAR RSX 220
	C16	VG 150	CLP 150 S ECO GEAR 150 M		Degol BG 150 Plus Degol BG 150 1)	GEAR RSX 150
	C17	VG 100	ECO GEAR 100 M		Degol BG 100 Plus Degol BG 100 1)	GEAR RSX 100
Polyglycol (PG oil)	C23	VG 460			Degol GS 460	GEAR VSG 460
	C24	VG 320			Degol GS 320	GEAR VSG 320
	C25	VG 220			Degol GS 220	GEAR VSG 220
Poly-α-olefin (PAO oil)	C33	VG 460	ECO GEAR 460 S	4460 XEP 5460 XEP	Degol PAS 460	SYNTOGEAR PE 460 EVOGEAR SX 460
	C34	VG 320	ECO GEAR 320 S	4320 XEP 5320 XEP	Degol PAS 320	SYNTOGEAR PE 320 EVOGEAR SX 320
	C35	VG 220	ECO GEAR 220 S	4220 XEP 5220 XEP	Degol PAS 220	SYNTOGEAR PE 220 EVOGEAR SX 220
Biologically degradable oils (BIO oil)	C44	VG 320				
	C45	VG 220				
	C46	VG 150				
Physiologically safe oils (PHY oil)	C53	VG 460				
	C54	VG 320				
	C55	VG 220				

1) with solid content MoS_2

Table C Lubricant	Code no.	Viscosity ISO-VG DIN 51519 at 40 °C (mm^2/s)	Lubricating oils for FLENDER gear motors			
			BECHEM	BEL-RAY TOTAL PERFORMANCE LUBRICANTS	bp	Brugarolas
Mineral oils (MIN oil)	C15	VG 220			Energol GR-XF 220 Energol GR-XP 220	Beslux Gear XP 220
	C16	VG 150			Energol GR-XF 150	
	C17	VG 100				
Polyglycol (PG oil)	C23	VG 460	BERUSYNTH EP 460		Enersyn SG-XP 460	Beslux Sincart W 460
	C24	VG 320	BERUSYNTH EP 320		Enersyn SG-XP 320	Beslux Sincart W 320
	C25	VG 220	BERUSYNTH EP 220		Enersyn SG-XP 220	Beslux Sincart W 220
Poly-α-olefin (PAO oil)	C33	VG 460		Bel-Ray Synth. Gear Oil 6694	Enersyn EP-XF 460	Beslux Gearsint XP 460
	C34	VG 320		Bel-Ray Synth. Gear Oil 6692	Enersyn EP-XF 320	Beslux Gearsint XP 320
	C35	VG 220		Bel-Ray Synth. Gear Oil 6690	Enersyn EP-XF 220	Beslux Gearsint XP 220
Biologically degradable oils (BIO oil)	C44	VG 320				
	C45	VG 220				
	C46	VG 150				
Physiologically safe oils (PHY oil)	C53	VG 460				
	C54	VG 320				
	C55	VG 220				

Table C Lubricant	Code no.	Viscosity ISO-VG DIN 51519 at 40 °C (mm^2/s)	Lubricating oils for FLENDER gear motors			
			B&L	Castrol classic	Castrol performance	CEPSA
Mineral oils (MIN oil)	C15	VG 220		Alpha SP 220 Alpha MAX 220	Optigear BM 220 Tribol 1100 / 220	CEPSA AEROGEAR 220
	C16	VG 150		Alpha SP 150 Alpha MAX 150	Optigear BM 150 Tribol 1100 / 150	
	C17	VG 100		Alpha SP 100 Alpha MAX 100	Optigear BM 100 Tribol 1100 / 100	
Polyglycol (PG oil)	C23	VG 460			Optiflex A 460 Tribol 800 / 460	
	C24	VG 320			Optiflex A 320 Tribol 800 / 320	
	C25	VG 220			Optiflex A 220 Tribol 800 / 220	
Poly-α-olefin (PAO oil)	C33	VG 460		Optigear Synth. A 460 Alphasyn EP 460	Optigear Synth. X 460 Tribol 1710 / 460	AEROGEAR SYNT 460
	C34	VG 320		Optigear Synth. A 320 Alphasyn EP 320	Optigear Synth. X 320 Tribol 1710 / 320	AEROGEAR SYNT 320
	C35	VG 220		Optigear Synth. A 220 Alphasyn EP 220	Optigear Synth. X 220 Tribol 1710 / 220	AEROGEAR SYNT 220
Biologically degradable oils (BIO oil)	C44	VG 320	RIVOLTA S.G.L. 320		Tribol BioTop 1418 / 320	
	C45	VG 220	RIVOLTA S.G.L. 220		Tribol BioTop 1418 / 220	
	C46	VG 150			Tribol BioTop 1418 / 150	
Physiologically safe oils (PHY oil)	C53	VG 460			Optileb GT 460 FoodProof 1800/460 2)	
	C54	VG 320			Optileb GT 320 FoodProof 1800/320 2)	
	C55	VG 220			Optileb GT 220 FoodProof 1800/220 2)	

2) PG oil

Table C Lubricant	Code no.	Viscosity ISO-VG DIN 51519 at 40 °C (mm^2/s)	Lubricating oils for FLENDER gear motors			
			cognis	DELTA OIL	Esso	FUCHS
Mineral oils (MIN oil)	C15	VG 220		EP Industrial G 220	SPARTAN EP 220 3)	RENOLIN CLP 220 RENOLIN CLP 220 PLUS
	C16	VG 150			SPARTAN EP 150 3)	RENOLIN CLP 150 RENOLIN CLP 150 PLUS
	C17	VG 100			SPARTAN EP 100 3)	RENOLIN CLP 100 RENOLIN CLP 100 PLUS
Polyglycol (PG oil)	C23	VG 460	Breox SL 460			RENOLIN PG 460
	C24	VG 320	Breox SL 320			RENOLIN PG 320
	C25	VG 220	Breox SL 220			RENOLIN PG 220
Poly-α-olefin (PAO oil)	C33	VG 460				RENOLIN UNISYN CLP 460
	C34	VG 320				RENOLIN UNISYN CLP 320
	C35	VG 220				RENOLIN UNISYN CLP 220
Biologically degradable oils (BIO oil)	C44	VG 320				PLANTOGEAR 320 S
	C45	VG 220				PLANTOGEAR 220 S
	C46	VG 150				PLANTOGEAR 150 S
Physiologically safe oils (PHY oil)	C53	VG 460	Breox FGL 460 4)			
	C54	VG 320	Breox FGL 320 4)			
	C55	VG 220	Breox FGL 220 4)			

3) ESSO guarantees the qualities required by FLENDER only for products from Europe
4) PG oil

Table C Lubricant	Code no.	Viscosity ISO-VG DIN 51519 at 40 °C (mm^2/s)	Lubricating oils for FLENDER gear motors			
			FUCHS LUBRITECH	FRAGOL	galp energia	KLÜBER LUBRICATION
Mineral oils (MIN oil)	C15	VG 220	GEARMASTER CLP 220			Klüberoil GEM 1 - 220 N
	C16	VG 150	GEARMASTER CLP 150			Klüberoil GEM 1 - 150 N
	C17	VG 100	GEARMASTER CLP 100			Klüberoil GEM 1 - 100 N
Polyglycol (PG oil)	C23	VG 460	GEARMASTER PGP 460	Ucolub BSL-IG 460		SYNTHESO D 460 EP
	C24	VG 320	GEARMASTER PGP 320	Ucolub BSL-IG 320		SYNTHESO D 320 EP
	C25	VG 220	GEARMASTER PGP 220	Ucolub BSL-IG 220		SYNTHESO D 220 EP
Poly-α-olefin (PAO oil)	C33	VG 460	GEARMASTER SYN 460	Ucolub N-PA 460	Galp Transgear SMP 460	Klübersynth. GEM 4 - 460 N
	C34	VG 320	GEARMASTER SYN 320	Ucolub N-PA 320	Galp Transgear SMP 320	Klübersynth. GEM 4 - 320 N
	C35	VG 220	GEARMASTER SYN 220	Ucolub N-PA 220	Galp Transgear SMP 220	Klübersynth. GEM 4 - 220 N
Biologically degradable oils (BIO oil)	C44	VG 320	GEARMASTER ECO 320			Klübersynth. GEM 2 - 320
	C45	VG 220	GEARMASTER ECO 220			Klübersynth. GEM 2 - 220
	C46	VG 150	GEARMASTER ECO 150			
Physiologically safe oils (PHY oil)	C53	VG 460		Ucolub BSL 460 5)		
	C54	VG 320		Ucolub BSL 320 5)		
	C55	VG 220		Ucolub BSL 220 5)		

5) PG oil

Table C Lubricant	Code no.	Viscosity ISO-VG DIN 51519 at 40 °C (mm^2/s)	Lubricating oils for FLENDER gear motors			
			LE	MEGUIN OILS OF GERMANY	Mobil	MOTOREX
Mineral oils (MIN oil)	C15	VG 220	607 ALMASOL Vari-Purpose Gear Lubricant		Mobilgear 630 Mobilgear XMP 220	GEAR COMPOUND PLUS 220
	C16	VG 150	604 ALMASOL Vari-Purpose Gear Lubricant		Mobilgear 629 Mobilgear XMP 150	GEAR COMPOUND PLUS 150
	C17	VG 100	606 ALMASOL Vari-Purpose Gear Lubricant		Mobilgear 627 Mobilgear XMP 100	GEAR COMPOUND PLUS 100
Polyglycol (PG oil)	C23	VG 460				
	C24	VG 320				
	C25	VG 220				
Poly-α-olefin (PAO oil)	C33	VG 460		megol Gearoil Synth 460	Mobil SHC 634 Mobilgear SHC XMP460	GEAR SINTEC CLP 460
	C34	VG 320		megol Gearoil Synth 320	Mobil SHC 632 Mobilgear SHC XMP320	GEAR SINTEC CLP 320
	C35	VG 220		megol Gearoil Synth 220	Mobil SHC 630 Mobilgear SHC XMP220	GEAR SINTEC CLP 220
Biologically degradable oils (BIO oil)	C44	VG 320				
	C45	VG 220				
	C46	VG 150				
Physiologically safe oils (PHY oil)	C53	VG 460				
	C54	VG 320				
	C55	VG 220				

Table C Lubricant	Code no.	Viscosity ISO-VG DIN 51519 at 40 °C (mm^2/s)	Lubricating oils for FLENDER gear motors			
			OMV	ORLEN OIL	Petrol Ofisi	Q8
Mineral oils (MIN oil)	C15	VG 220	OMV gear HST 220	TRANSOL PREMIUM 220	PO Gravis MP 220	Q8 Goya NT 220
	C16	VG 150	OMV gear HST 150		PO Gravis MP 150	Q8 Goya NT 150
	C17	VG 100	OMV gear HST 100		PO Gravis MP 100	
Polyglycol (PG oil)	C23	VG 460				
	C24	VG 320				
	C25	VG 220				
Poly-α-olefin (PAO oil)	C33	VG 460		TRANSGEAR PE 460	PO Gravis SP 460	Q8 El Greco 460
	C34	VG 320		TRANSGEAR PE 320	PO Gravis SP 320	Q8 El Greco 320
	C35	VG 220		TRANSGEAR PE 220	PO Gravis SP 220	Q8 El Greco 220
Biologically degradable oils (BIO oil)	C44	VG 320				
	C45	VG 220				
	C46	VG 150				
Physiologically safe oils (PHY oil)	C53	VG 460				
	C54	VG 320				
	C55	VG 220				

Table C Lubricant	Code no.	Viscosity ISO-VG DIN 51519 at 40 °C (mm^2/s)	Lubricating oils for FLENDER gear motors			
			Shell	SRS	STATOIL	TEXACO
Mineral oils (MIN oil)	C15	VG 220	Shell Omala F 220 Shell Omala 220	Ersolan 220	LoadWay EP 220	Meropa WM 220 Auriga EP 220
	C16	VG 150	Shell Omala F 150 Shell Omala 150	Ersolan 150		Meropa WM 150 Auriga EP 150
	C17	VG 100	Shell Omala F 100 Shell Omala 100	Ersolan 100		Meropa WM 100 Auriga EP 100
Polyglycol (PG oil)	C23	VG 460	Shell Tivela S 460 Shell Cassida WG 460			
	C24	VG 320	Shell Tivela S 320 Shell Cassida WG 320			
	C25	VG 220	Shell Tivela S 220 Shell Cassida WG 220			
Poly-α-olefin (PAO oil)	C33	VG 460	Shell Omala HD 460			
	C34	VG 320	Shell Omala HD 320		MERETA 320	
	C35	VG 220	Shell Omala HD 220		MERETA 220	
Biologically degradable oils (BIO oil)	C44	VG 320	Shell Omala EPB 320			
	C45	VG 220	Shell Omala EPB 220			
	C46	VG 150	Shell Omala EPB 150			
Physiologically safe oils (PHY oil)	C53	VG 460	Shell Cassida WG 460 6)			
	C54	VG 320	Shell Cassida WG 320 6)			
	C55	VG 220	Shell Cassida WG 220 6)			

6) PG oil

Table C Lubricant	Kenn-ziffer	Viscosity ISO-VG DIN 51519 at 40 °C (mm^2/s)	Lubricating oils for FLENDER gear motors			
			TOTAL	SHAP	VECO	Verkol Lubricantes
Mineral oils (MIN oil)	C15	VG 220	KASSILLA GMP 220 CARTER EP 220	TUNGEAR 220 7)	VECO MATRANOL XP 220	COMPOUND MP 220
	C16	VG 150				COMPOUND MP 150
	C17	VG 100				
Polyglycol (PG oil)	C23	VG 460				
	C24	VG 320				
	C25	VG 220				
Poly-α-olefin (PAO oil)	C33	VG 460	CARTER SH 460			
	C34	VG 320	CARTER SH 320			
	C35	VG 220	CARTER SH 220			
Biologically degradable oils (BIO oil)	C44	VG 320				
	C45	VG 220				
	C46	VG 150				
Physiologically safe oils (PHY oil)	C53	VG 460	Kestone Nevastane SY 460 8)			
	C54	VG 320	Kestone Nevastane SY 320 8)			
	C55	VG 220	Kestone Nevastane SY 220 8)			

7) TUNGEAR is approved for Brazil under the name of GEAROIL in VG 220. Distributor: TRIBOTECHNICA Lubrificantes Sinteticos Sao Paulo.
TUNGEAR is approved for India under the name of Mo_X-Active Gear oil in VG 220. Distributor: OKS Speciality Lubricants Bombay.
8) PG oil

1.2 Lubricating greases for gear units and rolling bearings

For special gear unit applications, grease lubrication of the gears and/or bearings may be necessary.

Note: Greases may be used only if their use is specified in the operating instructions for the gear unit. The relubrication periods must be adhered to.

Gear greases are suitable for the lubrication of gears and bearings with closed gear units (e.g. small gear units) and open drives with low peripheral speeds (e.g. for girth gears, racks).

As well as lubrication, rolling bearing greases are used for the special sealing of bearing points, e.g. with vertical gear-unit connection shafts or against environmental action such as dust or water spray.

Note: In closed gear units with internal oil lubrication the gear oils must not be allowed to mix with bearing greases.

Table D			**Lubricating greases for FLENDER gear units and rolling bearings**			
Lubricant	Code no.	**Consistency** NLGI class DIN 51818	ARAL	bp	Castrol classic	Castrol performance
Gear greases (MIN-GF) Mineral oil base	G13	3				Viscogen 1)
	G14	2				
	G15	1				
	G16	0				
	G17	00	Aralub FDP 00		CLS Grease	Tribol 5000 Optitemp OG 0
	G18	000				Longtime PD 00 MA Mehrzweckfett 00
Rolling bearing greases (MIN-WF) Mineral oil base Lithium saponification	H12	4				
	H13	3	Aralub HL3	Energrease LS 3	Spheerol AP 3	
	H14	2	Aralub HL2	Energrease LS 2	Spheerol AP 2 Spheerol EPL 2	Tribol 4020 / 220-2 Longtime PD 2
	H15	1				Tribol 3785 2)

1) with solid content MoS_2
2) Mixture of mineral oil and PAO

Table D			**Lubricating greases for FLENDER gear units and rolling bearings**			
Lubricant	Code no.	**Consistency** NLGI class DIN 51818	FAG	FUCHS	FUCHS LUBRITECH	KLÜBER LUBRICATION
Gear greases (MIN-GF) Mineral oil base	G13	3				
	G14	2				
	G15	1				
	G16	0				
	G17	00				MICROLUBE GB 00
	G18	000				
Rolling bearing greases (MIN-WF) Mineral oil base Lithium saponification	H12	4				
	H13	3		Renolit FWA 220 Renolit H 443-HD 88		
	H14	2	Arcanol L 186 V 3)	Renolit H 443-HD 88 Renolit FWA 160	LAGERMEISTER EP 2	CENTOPLEX GLP 402
	H15	1				

3) Li, Ca saponification

Table D			Lubricating greases for FLENDER gear units and rolling bearings			
Lubricant	Code no.	**Consistency** NLGI class DIN 51818	Mobil	Shell	SRS	TEXACO
Gear greases (MIN-GF) Mineral oil base	G13	3				Glissando FG 30 EP
	G14	2				
	G15	1				
	G16	0	Mobilux EP 004		Wiolub GFW	
	G17	00		Alvania GL 00		Marfak 00
	G18	000				
Rolling bearing greases (MIN-WF) Mineral oil base Lithium saponification	H12	4				
	H13	3	Mobilux EP 3	Alvania RL 3 Alvania EP / LF 3		
	H14	2	Mobilux EP 2	Alvania RL 2 Alvania EP / LF 2	Wiolub LFK 2	Multifak 2 Multifak 20
	H15	1				

Table D			Lubricating greases for FLENDER gear units and rolling bearings			
Lubricant	Code no.	**Consistency** NLGI class DIN 51818	TOTAL			
Gear greases (MIN-GF) Mineral oil base	G13	3				
	G14	2				
	G15	1				
	G16	0	Multis EP 0			
	G17	00	Multis EP 00			
	G18	000				
Rolling bearing greases (MIN-WF) Mineral oil base Lithium saponification	H12	4				
	H13	3	Multis 3 Multis EP 3			
	H14	2	Multis 2 Multis EP 2			
	H15	1	Multis 1 Multis EP 1			

2. Lubricants for ZAPEX couplings

Note: For **FLUDEX couplings**, special lubricant recommendations apply.

According to manufacturer's information the oils and greases listed in these operating instructions are manufactured and supplied **world-wide** in the above-mentioned quality as required by FLENDER (Exceptions: Observe footnotes in the tables).

2.1 Required oil and grease quality

For FLENDER ZAPEX couplings, only oils and greases containing active agents to DIN 51 517-3 for increasing corrosion protection and resistance to ageing and for reducing wear in mixed-friction areas are approved. The scuffing resistance of the oils in the FZG test to DIN 51 354-2 must comply with stage 12 or higher under A/8,3/90 test conditions.

In addition, the oils and greases must meet the following quality requirements specified by FLENDER:

- Compatibility with elastomer materials of the shaft-sealing rings
- Compatibility with liquid seals between bolted-joint surfaces.

Note: The use of lubricants which do not comply with the above quality requirements may invalidate our product guarantee. Please note that every lubricant manufacturer or supplier is responsible for the quality of his product.

Which lubricant to select always depends on the viscosity or NLGI class indicated in these operating instructions. If a different viscosity or NLGI class or a lubricant of a type other than those recommended in these instructions is used, the operator is responsible for its technical suitability. To minimise the technical risk in such cases, we recommend using a lubricant of the above indicated quality, which should be accompanied by a statement of suitability by the lubricant manufacturer.

Caution! **The instructions given in the operating instructions for the couplings must be observed!**

Deviations are permitted only after consultation with FLENDER!

2.1.1 Oil and grease types

Note: The upper and lower limits for the operating temperatures (flash point, pour point) of individual oils and greases may vary considerably. For these and other data and properties of oils and greases, refer to the lubricant manufacturers' technical data sheets.

According to the manufacturers, the following are the minimum periods during which the oils or greases can be used without undergoing any significant change in quality:

– with use at up to 70 °C after approx. 8 000 operating hours, max. 2 years,
  with use at over 70 °C after approx. 3 000 operating hours, max. 1 year.

2.1.2 Oil and grease change

The degree of purity of the lubricant affects the operating reliability and life span of the lubricant and the coupling. Care must always be taken that the oil or grease in the coupling is clean. For the first lubricant change after start-up of the coupling and for subsequent lubricant changes, the specifications in the operating instructions for the coupling must be observed. With larger lubricant quantities, an anlysis should be carried out to find out whether cleaning or changing is required.

When changing lubricant of the same type, the quantity of lubricant remaining in the coupling should be kept as low as possible. Generally speaking, a small remaining quantity will cause no particular problems. Lubricants of different types and manufacturers must not be mixed together. If necessary, confirmation that the new lubricant is compatible with residues of the old lubricant should be obtained from the manufacturer.

Caution! **Lubricants must never be mixed with other substances.**

Table E Lubricant	Code no.	Oil: Viscosity in cSt at 40 °C DIN 51519 Grease: Consistency DIN 51818		Lubricating oils and lubricating greases for FLENDER ZAPEX couplings			
				ADDINOL	ARAL	AVIA	bp
Mineral oils (MIN oil)	I11	ISO class	VG 1000				
	I12		VG 680	CLP 680 S ECO GEAR 680 M	Degol BG 680 Plus	GEAR RSX 680	Energol GR-XF 680
	I13		VG 460	CLP 460 S ECO GEAR 460 M	Degol BG 460 Plus	GEAR RSX 460	Energol GR-XF 460
	I14		VG 320				
Liquefied greases (MIN-FLF) Mineral oil base	J15	NLGI class	1				
	J16		0		Aralub Fließfett AN 0		
	J17		00				Energrease LS-EP 00
	J18		000				

Table E Lubricant	Code no.	Oil: Viscosity in cSt at 40 °C DIN 51519 Grease: Consistency DIN 51818		Lubricating oils and lubricating greases for FLENDER ZAPEX couplings			
				Brugarolas	Castrol classic	Castrol performance	CEPSA
Mineral oils (MIN oil)	I11	ISO class	VG 1000				CEPSA AEROGEAR 1000
	I12		VG 680	Beslux gear XP 680	Alpha SP 680	Tribol 1100 / 680 Optigear BM 680	CEPSA AEROGEAR 680
	I13		VG 460	Beslux gear XP 460	Alpha SP 460 Alpha MAX 460	Tribol 1100 / 460 Optigear BM 460	CEPSA AEROGEAR 460
	I14		VG 320				
Liquefied greases (MIN-FLF) Mineral oil base	J15	NLGI class	1				
	J16		0				
	J17		00		CLS Grease	Tribol 3020/1000-00 Longtime PD 00	
	J18		000				

Table E Lubricant	Code no.	Oil: Viscosity in cSt at 40 °C DIN 51519 Grease: Consistency DIN 51818		Lubricating oils and lubricating greases for FLENDER ZAPEX couplings			
				DELTA OIL	Esso	FLENDER	FUCHS
Mineral oils (MIN oil)	I11	ISO class	VG 1000				
	I12		VG 680		SPARTAN EP 680 1)		Renolin EPX 680 Renolin CLP 680 PLUS
	I13		VG 460	EP Industrial 460	SPARTAN EP 460 1)		Renolin EPX 460 Renolin CLP 460 PLUS
	I14		VG 320				
Liquefied greases (MIN-FLF) Mineral oil base	J15	NLGI class	1				
	J16		0			FLENDER Hochleistungsfett	
	J17		00				RENOLIT SO-D 6024
	J18		000				

1) ESSO guarantees the qualities required by FLENDER only for products from Europe

Table E Lubricant	Code no.	Oil: Viscosity in cSt at 40 °C DIN 51519 Grease: Consistency DIN 51818		Lubricating oils and lubricating greases for FLENDER ZAPEX couplings			
				FUCHS LUBRITECH	KLÜBER LUBRICATION	LE	Mobil
Mineral oils (MIN oil)	I11	ISO class	VG 1000				
	I12		VG 680	GEARMASTER CLP 680	STRUCTOVIS BHD-MF	609 ALMASOL Vari-Purpose Gear Lubricant	Mobilgear 636 Mobilgear XMP 680
	I13		VG 460	GEARMASTER CLP 460		608 ALMASOL Vari-Purpose Gear Lubricant	Mobilgear 634 Mobilgear XMP 460
	I14		VG 320				
Liquefied greases (MIN-FLF) Mineral oil base	J15	NLGI class	1				
	J16		0		GRAFLOSKON C-SG 500 Plus		
	J17		00				Mobilux EP 004
	J18		000				

Table E Lubricant	Code no.	Oil: Viscosity in cSt at 40 °C DIN 51519 Grease: Consistency DIN 51818		Lubricating oils and lubricating greases for FLENDER ZAPEX couplings			
				MOTOREX	OMV	PO Petrol Ofisi	Shell
Mineral oils (MIN oil)	I11	ISO class	VG 1000			PO Gravis MP 1000	
	I12		VG 680	GEAR COMPOUND PLUS 680	OMV gear HST 680	PO Gravis MP 680	Shell Omala 680
	I13		VG 460	GEAR COMPOUND PLUS 460	OMV gear HST 460	PO Gravis MP 460	Shell Omala 460 Shell Omala F 460
	I14		VG 320			PO Gravis MP 320	
Liquefied greases (MIN-FLF) Mineral oil base	J15	NLGI class	1				
	J16		0				
	J17		00				Alvina GL 00
	J18		000				

Table E Lubricant	Code no.	Oil: Viscosity in cSt at 40 °C DIN 51519 Grease: Consistency DIN 51818		Lubricating oils and lubricating greases for FLENDER ZAPEX couplings			
				STATOIL	TEXACO	SHAP	VECO
Mineral oils (MIN oil)	I11	ISO class	VG 1000				VECO MATRANOL XP 1000
	I12		VG 680			TUNGEAR 680 2)	VECO MATRANOL XP 680
	I13		VG 460		Meropa WM 460 Auriga EP 460	TUNGEAR 460 2)	VECO MATRANOL XP 460
	I14		VG 320	LoadWay EP 320			
Liquefied greases (MIN-FLF) Mineral oil base	J15	NLGI class	1				
	J16		0				
	J17		00				
	J18		000				

2) TUNGEAR is approved for Brazil under the name of GEAROIL in VG 460 and 680. Distributor: TRIBOTECHNICA Lubrificantes Sinteticos Sao Paulo.
TUNGEAR is approved for India under the name of Mox-Active Gear oil in VG 460. Distributor: OKS Speciality Lubricants Bombay.

Table E				Lubricating oils and lubricating greases for FLENDER ZAPEX couplings			
Lubricant	Code no.	**Oil: Viscosity** in cSt at 40 °C DIN 51519 **Grease: Consistency** DIN 51818		Verkol Lubricantes			
Mineral oils (MIN oil)	I11	**ISO class**	VG 1000				
	I12		VG 680				
	I13		VG 460				
	I14		VG 320	COMPOUND MP 320			
Liquefied greases (MIN-FLF) Mineral oil base	J15	**NLGI class**	1				
	J16		0				
	J17		00				
	J18		000				

A. FRIEDR. FLENDER AG	**Alfred-Flender-Straße 77 46395 Bocholt**	**Postfach 1364 46393 Bocholt**	**Tel.: (0 28 71) 92 - 0 Fax: (0 28 71) 92 - 25 96**	**contact@flender.com www.flender.com**
A. FRIEDR. FLENDER AG Kundenservice Center Nord	Alfred-Flender-Straße 77 46395 Bocholt	Postfach 1364 46393 Bocholt	Tel.: (0 28 71) 92 - 0 Fax: (0 28 71) 92 - 14 35	ksc.nord@flender.com www.flender.com
A. FRIEDR. FLENDER AG Kundenservice Center Süd	Bahnhofstraße 40 - 44 72072 Tübingen	Postfach 1709 72007 Tübingen	Tel.: (0 70 71) 7 07 - 0 Fax: (0 70 71) 7 07 - 3 40	ksc.sued@flender.com www.flender.com
A. FRIEDR. FLENDER AG Kundenservice Center Süd (Außenstelle München)	Liebigstraße 14	85757 Karlsfeld	Tel.: (0 81 31) 90 03 - 0 Fax: (0 81 31) 90 03 - 33	ksc.sued@flender.com www.flender.com
A. FRIEDR. FLENDER AG Kundenservice Center Ost / Osteuropa	Schlossallee 8	13156 Berlin	Tel.: (0 30) 91 42 50 58 Fax: (0 30) 47 48 79 30	ksc.ost@flender.com www.flender.com
A. FRIEDR. FLENDER AG Werk Friedrichsfeld	Am Industriepark 2	46562 Voerde	Tel.: (0 28 71) 92 - 0 Fax: (0 28 71) 92 - 25 96	contact@flender.com www.flender.com
A. FRIEDR. FLENDER AG Getriebewerk Penig	Thierbacher Straße 24 09322 Penig	Postfach 44/45 09320 Penig	Tel.: (03 73 81) 60 Fax: (03 73 81) 8 02 86	ute.tappert@flender.com www.flender.com
A. FRIEDR. FLENDER AG Kupplungswerk Mussum	Industriepark Bocholt Schlavenhorst 100	46395 Bocholt	Tel.: (0 28 71) 92 - 28 68 Fax: (0 28 71) 92 - 25 79	couplings@flender.com www.flender.com
A. FRIEDR. FLENDER AG FLENDER GUSS	Obere Hauptstraße 228 - 230	09228 Chemnitz/ Wittgensdorf	Tel.: (0 37 22) 64 - 0 Fax: (0 37 22) 94 - 1 38	flender.guss@flender-guss.com www.flender-guss.de
WINERGY AG	Am Industriepark 2 46562 Voerde	Postfach 201160 46553 Voerde	Tel.: (0 28 71) 9 24 Fax: (0 28 71) 92 - 24 87	info@winergy-ag.com www.winergy-ag.com
FLENDER TÜBINGEN GMBH	Bahnhofstraße 40 - 44 72072 Tübingen	Postfach 1709 72007 Tübingen	Tel.: (0 70 71) 7 07 - 0 Fax: (0 70 71) 7 07 - 4 00	sales-motox@flender-motox.com www.flender.com
LOHER GMBH	Hans-Loher-Straße 32 94099 Ruhstorf	Postfach 1164 94095 Ruhstorf	Tel.: (0 85 31) 3 90 Fax: (0 85 31) 3 94 37	info@loher.de www.loher.de
A. FRIEDR. FLENDER AG FLENDER SERVICE INTERNATIONAL	Am Industriepark 2 46562 Voerde	Postfach 201160 46553 Voerde	Tel.: (0 28 71) 92 - 22 10 Fax: (0 28 71) 92 - 13 47	infos@flender-service.com www.flender-service.com
	Werk Herne Südstraße 111 44625 Herne	Postfach 101720 44607 Herne	Tel.: (0 23 23) 9 40 - 0 Fax: (0 23 23) 9 40 - 3 33	infos@flender-service.com www.flender-service.com
	24h Service Hotline		+49 (0) 17 22 81 01 00	
	Vertriebsbüro Penig Thierbacher Straße 24 09322 Penig	Postfach 44/45 09320 Penig	Tel.: (03 73 81) 61 - 5 20 Fax: (03 73 81) 61 - 4 88	infos@flender-service.com www.flender-service.com

Diese technische Unterlage hat gesetzlichen Schutz (DIN 34)

EUROPE

AUSTRIA	Flender Ges.m.b.H.	Industriezentrum Nö-Süd Strasse 4, Objekt 14 Postfach 132	2355 Wiener Neudorf	Phone: +43 (0) 22 36 - 6 45 70 Fax: +43 (0) 22 36 - 6 45 70 10	office@flender.at www.flender.at
BELGIUM & LUXEMBOURG	N.V. Flender Belge S.A.	Cyriel Buyssestraat 130	1800 Vilvoorde	Phone: +32 (0) 2 - 2 53 10 30 Fax: +32 (0) 2 - 2 53 09 66	sales@flender.be
BULGARIA	Auto-Profi N GmbH	52, Alabin Str.	1000 Sofia	Phone: +359 (0) 2 - 9 80 66 06 Fax: +359 (0) 2 - 9 80 33 01	flender@auto-profi.com
CROATIA/SLOVENIA BOSNIA-HERZEGOVINA	HUM - Naklada d.o.o.	Mandroviceva 3a	10000 Zagreb	Phone: +385 (0) 1 - 2 30 60 25 Fax: +385 (0) 1 - 2 30 60 24	flender@hi.htnet.hr
CZECH REPUBLIC	A. Friedr. Flender AG	Branch Office Fibichova 218	27601 Melnik	Phone: +420 315 - 62 12 20 Fax: +420 315 - 62 12 22	info-cz@flender.com
DENMARK	Flender Scandinavia A/S	Rugmarken 35 B	3520 Farum	Phone: +45 - 70 22 60 03 Fax: +45 - 44 99 16 62	kontakt@ flenderscandinavia.com www.flenderscandinavia.com
ESTHONIA / LATVIA LITHUANIA	Addinol Mineralöl Marketing OÜ	Suur-Söjamäe 32	11415 Tallinn (Esthonia)	Phone: +372 (0) 6 - 27 99 99 Fax: +372 (0) 6 - 27 99 90	flender@addinol.ee www.addinol.ee
FINLAND	Flender Oy	Ruosilantie 2 B	00390 Helsinki	Phone: +358 (0) 9 - 4 77 84 10 Fax: +358 (0) 9 - 4 36 14 10	webmaster@flender.fi www.flender.fi
FRANCE	Flender S.a.r.l.	Head Office 3, rue Jean Monnet - B.P. 5	78996 Elancourt Cedex	Phone: +33 (0) 1 - 30 66 39 00 Fax: +33 (0) 1 - 30 66 35 13	sales@flender.fr
	Flender S.a.r.l	Sales Office Agence de Lyon Parc Inopolis, Route de Vourles	69230 Saint Genis Laval	Phone: +33 (0) 4 - 72 83 95 20 Fax: +33 (0) 4 - 72 83 95 39	sales@flender.fr
FRANCE	Flender-Graffenstaden SA	1, rue du Vieux Moulin B.P.84	67400 Illkirch - Graffenstaden 67402 Illkirch - Graffenstaden	Phone: +33 (0) 3 - 88 67 60 00 Fax: +33 (0) 3 - 88 67 06 17	flencomm@flender-graff.com
GREECE	Flender Hellas Ltd.	2, Delfon str.	11146 Athens	Phone: +30 210 - 2 91 72 80 Fax: +30 210 - 2 91 71 02	flender@otenet.gr
HUNGARY	Wentech Kft.	Bécsi Út 3-5	1023 Budapest	Phone: +36 (0) 1 - 3 45 07 90 Fax: +36 (0) 1 - 3 45 07 92	flender@monornet.hu jambor.laszlo@axelero.hu
ITALY	Flender Cigala S.p.A.	Parco Tecnologico Manzoni Palazzina G Viale delle industrie, 17	20040 Caponago (MI)	Phone: +39 (0) 02 - 95 96 31 Fax: +39 (0) 02 - 95 74 39 30	info@flendercigala.it
THE NETHERLANDS	Flender Nederland B.V.	Lage Brink 5-7 Postbus 1073	7317 BD Apeldoorn 7301 BH Apeldoorn	Phone: +31 (0) 55 - 5 27 50 00 Fax: +31 (0) 55 - 5 21 80 11	sales@flender.nl www.flender.nl
THE NETHERLANDS	Bruinhof B.V.	Boterdiep 37 Postbus 9607	3077 AW Rotterdam 3007 AP Rotterdam	Phone: +31 (0) 10 - 4 97 08 08 Fax: +31 (0) 10 - 4 82 43 50	info@bruinhof.nl www.bruinhof.nl
NORWAY	Flender Scandinavia A/S	Rugmarken 35 B	3520 Farum	Phone: +45 - 70 22 60 03 Fax: +45 - 44 99 16 62	kontakt@ flenderscandinavia.com www.flenderscandinavia.com
POLAND	A. Friedr. Flender AG	Branch Office Przedstawicielstwo w Polsce ul. Wyzwolenia 27	43-190 Mikolów	Phone: +48 (0) 32 - 2 26 45 61 Fax: +48 (0) 32 - 2 26 45 62	flender@pro.onet.pl www.flender.pl
PORTUGAL	Rodamientos FEYC, S.A	R. Jaime Lopes Dias, 1668 CV	1750-124 Lissabon	Phone: +351 (0) 21 - 7 54 24 10 Fax: +351 (0) 21 - 7 54 24 19	info@rfportugal.com
ROMANIA	CN Industrial Group srl	B-dul Garii Obor nr. 8D Sector 2	021747 Bucuresti	Phone: +40 (0) 21 - 2 52 98 61 Fax: +40 (0) 21 - 2 52 98 60	office@flender.ro
RUSSIA	Flender OOO	Tjuschina 4-6	191119 St. Petersburg	Phone: +7 (0) 8 12 - 3 20 90 34 Fax: +7 (0) 8 12 - 3 20 90 82	flendergus@mail.spbnit.ru
SLOVAKIA	A. Friedr. Flender AG	Branch Office Vajanského 49, P.O. Box 286	08001 Presov	Phone: +421 (0) 51 - 7 70 32 67 Fax: +421 (0) 51 - 7 70 32 67	micenko.flender@nextra.sk
SPAIN	Flender Ibérica S.A.	Poligono Industrial San Marcos Calle Morse, 31 (Parcela D-15)	28906 Getafe - Madrid	Phone: +34 (0) 91 - 6 83 61 86 Fax: +34 (0) 91 - 6 83 46 50	f-iberica@flender.es www.flender.es
SWEDEN	Flender Scandinavia	Äsenvägen 2	44339 Lerum	Phone: +46 (0) 302 - 1 25 90 Fax: +46 (0) 302 - 1 25 56	kontakt@ flenderscandinavia.com www.flenderscandinavia.com
SWITZERLAND	Flender AG	Zeughausstr. 48	5600 Lenzburg	Phone: +41 (0) 62 - 8 85 76 00 Fax: +41 (0) 62 - 8 85 76 76	info@flender.ch www.flender.ch
TURKEY	Flender Güc Aktarma Sistemleri Sanayi ve Ticaret Ltd. Sti.	IMES Sanayi, Sitesi E Blok 502, Sokak No.22	34776 Dudullu - Istanbul	Phone: +90 (0) 2 16 - 4 66 51 41 Fax: +90 (0) 2 16 - 3 64 59 13	cuzkan@flendertr.com www.flendertr.com
UKRAINE	DIV-Deutsche Industrievertretung	Prospect Pobedy 44	03057 Kiev	Phone: +380 (0) 44 - 2 30 29 43 Fax: +380 (0) 44 - 2 30 29 30	flender@div.kiev.ua
UNITED KINGDOM & EIRE	Flender Power Transmission Ltd.	Thornbury Works, Leeds Road	Bradford West Yorkshire BD3 7EB	Phone: +44 (0) 12 74 - 65 77 00 Fax: +44 (0) 12 74 - 66 98 36	info@flender-power.co.uk www.flender-power.co.uk
SERBIA-MONTENEGRO ALBANIA MACEDONIA	G.P.Inzenjering d.o.o.	III Bulevar 54/19	11070 Novi Beograd	Phone: +381 (0) 11 - 60 44 73 Fax: +381 (0) 11 - 3 11 67 91	flender@eunet.yu

Diese technische Unterlage hat gesetzlichen Schutz (DIN 34)

AFRICA					
NORTH AFRICAN COUNTRIES	Flender S.a.r.l.	3, rue Jean Monnet - B.P. 5	78996 Elancourt Cedex	Phone: +33 (0) 1 - 30 66 39 00 Fax: +33 (0) 1 - 30 66 35 13	sales@flender.fr
EGYPT	Sons of Farid Hassanen	81 Matbaa Ahlia Street	Boulac 11221, Cairo	Phone: +20 (0) 2 - 5 75 15 44 Fax: +20 (0) 2 - 5 75 17 02	hussein@sonfarid.com
SOUTH AFRICA	Flender Power Transmission (Pty.) Ltd.	Head Office Cnr. Furnace St & Quality Rd. P.O. Box 131	Isando - Johannesburg Isando 1600	Phone: +27 (0) 11 - 5 71 20 00 Fax: +27 (0) 11 - 3 92 24 34	sales@flender.co.za www.flender.co.za
	Flender Power Transmission (Pty.) Ltd.	Sales Offices Unit 3 Marconi Park, 9 Marconi Crescent, Montague Gardens, P.O. Box 37291	Cape Town Chempet 7442	Phone: +27 (0) 21 - 5 51 50 03 Fax: +27 (0) 21 - 5 52 38 24	sales@flender.co.za
	Flender Power Transmission (Pty.) Ltd.	Unit 3 Goshawk Park Falcon Industrial Estate P.O. Box 1608	New Germany - Durban New Germany 3620	Phone: +27 (0) 31 - 7 05 38 92 Fax: +27 (0) 31 - 7 05 38 72	sales@flender.co.za
	Flender Power Transmission (Pty.) Ltd.	9 Industrial Crescent, Ext. 25 P.O. Box 17609	Witbank Witbank 1035	Phone: +27 (0) 13 - 6 92 34 38 Fax: +27 (0) 13 - 6 92 34 52	sales@flender.co.za
	Flender Power Transmission (Pty.) Ltd.	Unit 14 King Fisher Park, Alton Cnr. Ceramic Curve & Alumina Allee, P.O. Box 101995	Richards Bay Meerensee 3901	Phone: +27 (0) 35 - 7 51 15 63 Fax: +27 (0) 35 - 7 51 15 64	sales@flender.co.za
AMERICA					
ARGENTINA	Chilicote S.A.	Avda. Julio A. Roca 546	C 1067 ABN Buenos Aires	Phone: +54 (0) 11 - 43 31 66 10 Fax: +54 (0) 11 - 43 31 42 78	chilicote@chilicote.com.ar
BRASIL	Flender Brasil Ltda.	Head Office Rua Quatorze, 60 Cidade Industrial	32210 - 660 Contagem - MG	Phone: +55 (0) 31 - 33 69 20 00 Fax: +55 (0) 31 - 33 31 18 93	vendas@flenderbrasil.com
	Flender Brasil Ltda.	Sales Offices Rua James Watt, 152 conjunto 142 - Brooklin Novo	04576 - 050 São Paulo - SP	Phone: +55 (0) 11 - 55 05 99 33 Fax: +55 (0) 11 - 55 05 30 10	flesao@uol.com.br
	Flender Brasil Ltda.	Rua Campos Sales, 1095 sala 14 - centro	14015 - 110 Ribeirão Preto - SP	Phone: +55 (0) 16 - 6 35 15 90 Fax: +55 (0) 16 - 6 35 11 05	flender.ribpreto@uol.com.br
	Flender Brasil Ltda.	Rua da Mitra - quadra 30 - lote16 Edifício Cristal - sala 207 Bairro Renascença	65075 - 770 São Luis - MA	Phone: +55 (0) 98 - 32 25 84 92 Fax: +55 (0) 98 - 32 25 84 93	flenderslz@uol.com.br
	Flender Brasil Ltda.	Rua Padre Anchieta, 1691 conjunto 1110 - Bairro Bigorrilho	80730 - 000 Curitiba - PR	Phone: +55 (0) 41 - 3 36 28 49 Fax: +55 (0) 41 - 3 36 28 49	quality.engineer@bol.com.br
	Flender Brasil Ltda.	Rua José Alexandre Buaiz, 160 sala 1017 - Enseada do Suá	29050 - 545 Vitória - ES	Phone: +55 (0) 27 - 32 24 37 35 Fax: +55 (0) 27 - 32 24 37 36	flender.vitoria@uol.com.br
CANADA	Flender Power Transmission Inc.	215 Shields Court, Units 4-6	Markham Ontario L3R 8V2	Phone: +1 (0) 9 05 - 3 05 10 21 Fax: +1 (0) 9 05 - 3 05 10 23	info@flenderpti.com www.flender.ca
CHILE / ARGENTINA BOLIVIA / ECUADOR PARAGUAY URUGUAY	Flender Cono Sur Ltda.	Avda. Galvarino Gallardo 1534	Providencia, Santiago	Phone: +56 (0) 2 - 2 35 32 49 Fax: +56 (0) 2 - 2 64 20 25	flender@flender.cl www.flender.cl
COLOMBIA	A.G.P. Representaciones Ltda.	Flender Liaison Office Colombia Av Boyaca No. 23 A 50 Bodega UA 7-1	Bogotá	Phone: +57 (0) 1 - 5 70 63 53 Fax: +57 (0) 1 - 5 70 73 35	aguerrero@agp.com.co www.agp.com.co
MEXICO	Flender de Mexico S.A. de C.V.	Head Office 17, Pte, 713 Centro	72000 Puebla	Phone: +52 (0) 2 22 - 2 37 19 00 Fax: +52 (0) 2 22 - 2 37 11 33	szugasti@flendermexico.com www.flendermexico.com
	Flender de Mexico S.A. de C.V.	Sales Offices Lago Nargis No. 38 Col. Granada	11520 Mexico, D.F.	Phone: +52 (0) 55 - 52 54 30 37 Fax: +52 (0) 55 - 55 31 69 39	info@flendermexico.com
	Flender de Mexico S.A. de C.V.	Ave. San Pedro No. 231-5 Col. Miravalle	64660 Monterrey, N.L.	Phone: +52 (0) 81 - 83 63 82 82 Fax: +52 (0) 81 - 83 63 82 83	info@flendermexico.com
PERU	Flender Cono Sur Ltda.	Avda. Galvarino Gallardo 1534	Providencia, Santiago	Phone: +56 (0) 2 - 2 35 32 49 Fax: +56 (0) 2 - 2 64 20 25	flender@flender.cl www.flender.cl
USA	Flender Corporation	950 Tollgate Road P.O. Box 1449	Elgin, IL. 60123	Phone: +1 (0) 8 47 - 9 31 19 90 Fax: +1 (0) 8 47 - 9 31 07 11	flender@flenderusa.com www.flenderusa.com
	Flender Corporation	Service Centers West 4234 Foster Ave.	Bakersfield, CA. 93308	Phone: +1 (0) 6 61 - 3 25 44 78 Fax: +1 (0) 6 61 - 3 25 44 70	flender1@lightspeed.net
VENEZUELA	F. H. Transmisiones S.A.	Calle Johan Schafer o Segunda Calle, Municipio Sucre	Petare, Caracas	Phone: +58 (0) 2 12 - 21 52 61 Fax: +58 (0) 2 12 - 21 18 38	fhtransm@telcel.net.ve www.fhtransmisiones.com

Diese technische Unterlage hat gesetzlichen Schutz (DIN 34)

ASIA

BANGLADESH SRI LANKA	Flender Limited	No.2 St. George's Gate Road 5th Floor, Hastings	Kolkata-700022	Phone: +91 (0) 33 - 2 23 05 45 Fax: +91 (0) 33 - 2 23 18 57	flender@flenderindia.com
PEOPLE'S REPUBLIC OF CHINA	Flender Power Transmission (Tianjin) Co., Ltd.	Head Office Shuanghu-Shuangchen Rd. West, Beichen Economic Development Area (BEDA)	Tianjin 300400	Phone: +86 (0) 22 - 26 97 20 63 Fax: +86 (0) 22 - 26 97 20 61	flender@flendertj.com www.flendertj.com
	Flender Power Transmission (Tianjin) Co., Ltd.	Sales Offices C-414, Lufthansa Center 50 Liangmaqiao Rd. Chaoyang District	Beijing 100016	Phone: +86 (0) 10 - 64 62 21 51 Fax: +86 (0) 10 - 64 62 21 43	beijing@flenderprc.com.cn
	Flender Power Transmission (Tianjin) Co., Ltd.	1101-1102 Harbour Ring Plaza 18 Xizang Zhong Rd.	Shanghai 200001	Phone: +86 (0) 21 - 53 85 31 48 Fax: +86 (0) 21 - 53 85 31 46	shanghai@ flenderprc.com.cn
	Flender Power Transmission (Tianjin) Co., Ltd.	Rm.1503, Jianyin Building 709 Jianshedadao, Hankou	Wuhan 430015	Phone: +86 (0) 27 - 85 48 67 15 Fax: +86 (0) 27 - 85 48 68 36	wuhan@flenderprc.com.cn
	Flender Power Transmission (Tianjin) Co., Ltd.	Rm.2802, Guangzhou International Electronics Tower 403 Huanshi Rd. East	Guangzhou 510095	Phone: +86 (0) 20 - 87 32 60 42 Fax: +86 (0) 20 - 87 32 60 45	guangzhou@ flenderprc.com.cn
	Flender Power Transmission (Tianjin) Co., Ltd.	G-6 / F Guoxin Mansion 77 Xiyu Street	Chengdu 610015	Phone: +86 (0) 28 - 86 19 83 72 Fax: +86 (0) 28 - 86 19 88 10	chengdu@flenderprc.com.cn
	Flender Power Transmission (Tianjin) Co., Ltd.	Rm.3-705, Tower D City Plaza Shenyang 206 Nanjing Street (N) Heping District	Shenyang 110001	Phone: +86 (0) 24 - 23 34 20 48 Fax: +86 (0) 24 - 23 34 20 46	shenyang@flenderprc.com.cn
	Flender Power Transmission (Tianjin) Co., Ltd.	Rm.302, Shanzi Zhong Da International Mansion 30 Southern Rd.	Xi'an 710002	Phone: +86 (0) 29 - 87 20 32 68 Fax: +86 (0) 29 - 87 20 32 04	xian@flenderprc.com.cn
	Flender Power Transmission (Tianjin) Co., Ltd.	Rm.23E, Xinhua Plaza, No.6 Renmin East Rd.	Kunming 650051	Phone: +86 (0) 871 - 3 12 43 68 Fax: +86 (0) 871 - 3 12 45 66	kunming@flenderprc.com.cn
	Flender Power Transmission (Tianjin) Co., Ltd.	Rm.1007, Building A, Golden Center, Jincheng International Plaza, No.68 Jingsan Rd.	Zhengzhou 450008	Phone: +86 (0) 371 - 5 38 80 85 Fax: +86 (0) 371 - 5 38 80 89	zhengzhou@ flenderprc.com.cn
	Flender Power Transmission (Tianjin) Co., Ltd.	Rm.908 (east), No.188 Guangzhou Rd.	Nanjing 210024	Phone: +86 (0) 25 - 83 24 25 50 Fax: +86 (0) 25 - 83 24 48 20	nanjing@flenderprc.com.cn
	Flender Power Transmission (Tianjin) Co., Ltd.	Rm.1408, Pearl River International Building No.99 Xinkai Rd. Xigang District	Dalian 116011	Phone: +86 (0) 411 - 83 77 93 55 Fax: +86 (0) 411 - 83 77 92 19	dalian@flenderprc.com.cn
	Flender Power Transmission (Tianjin) Co., Ltd.	Rm.1401, Tianlin Building Hunan Gold Source Hotel No.279, Second Block Furong Rd.	Changsha 410007	Phone: +86 (0) 731 - 5 16 73 09 Fax: +86 (0) 731 - 5 16 47 46	changsha@ flenderprc.com.cn
INDIA	Flender Limited	Head Office No.2 St. George's Gate Road 5th Floor	Hastings Kolkata - 700022	Phone: +91 (0) 33 - 22 23 05 45 Fax: +91 (0) 33 - 22 23 18 57	flender@flenderindia.com
	Flender Limited	Industrial Growth Centre Rakhajungle	Nimpura Kharagpur - 721302	Phone: +91 (0) 3222 - 23 33 07 Fax: +91 (0) 3222 - 23 33 64	works@flenderindia.com
	Flender Limited	Eastern Regional Sales Office No.2 St. George's Gate Road 5th Floor	Hastings Kolkata - 700022	Phone: +91 (0) 33 - 22 23 05 45 Fax: +91 (0) 33 - 22 23 08 30	ero@flenderindia.com
	Flender Limited	Western Regional Sales Office Plot No. 23, Sector 19-C	Vashi Navi Mumbai - 400705	Phone: +91 (0) 22 - 27 65 72 27 Fax: +91 (0) 22 - 27 65 72 28	wro@flenderindia.com
	Flender Limited	Southern Regional Sales Office 41 Nelson Manickam Road	Aminjikarai Chennai - 600029	Phone: +91 (0) 44 - 23 74 39 21 Fax: +91 (0) 44 - 23 74 39 19	sro@flenderindia.com
	Flender Limited	Northern Regional Sales Office 302 Bhikaji Cama Bhawan 11 Bhikaji Cama Palace	New Delhi - 110066	Phone: +91 (0) 11 - 51 85 96 56 Fax: +91 (0) 11 - 51 85 96 59	nro@flenderindia.com
INDONESIA	Flender Singapore Pte. Ltd.	Representative Office 6-01 Wisma Presisi Jl. Taman Aries Blok A1 No.1	Jakarta Barat 11620	Phone: +62 (0) 21 - 58 90 20 15 Fax: +62 (0) 21 - 58 90 20 19	bobwall@cbn.net.id
IRAN	Cimaghand Co. Ltd.	P.O. Box 15745-493 No.13, 16th East Street Beyhaghi Ave., Argentina Sq.	Tehran 15156	Phone: +98 (0) 21 - 8 73 02 14 Fax: +98 (0) 21 - 8 73 39 70	info@cimaghand.com
ISRAEL	Greenshpon	Boaz 3	34487 Haifa	Phone: +972 (0) 52 - 4 76 14 26 Fax: +972 (0) 4 - 8 14 60 37	ram@greenshpon.de www.greenshpon.co.il
JAPAN	Flender Japan Co., Ltd.	WBG Marive East 21F Nakase 2-6 Mihama-ku, Chiba-shi	Chiba 261-7121	Phone: +81 (0) 43 - 2 13 39 30 Fax: +81 (0) 43 - 2 13 39 55	contact@flender-japan.com
KAZAKHSTAN	KazGate GmbH	Abay ave 143	480009 Almaty	Phone: +7 (0) - 32 72 - 43 39 54 Fax: +7 (0) - 32 72 - 77 90 82	flender@kazgate.de
KOREA	Flender Ltd.	7th Fl. Dorim Bldg. 1823 Bangbae-Dong Seocho-Ku	Seoul 137-060	Phone: +82 (0) 2 - 34 78 63 37 Fax: +82 (0) 2 - 34 78 63 45	sales@flender-korea.com www.flender-korea.com
KUWAIT	South Gulf Company	Al-Showaikh Ind. Area P.O. Box 26229	Safat 13123	Phone: +965 (0) - 4 82 97 15 Fax: +965 (0) - 4 82 97 20	adelameen@awalnet.net.sa
LEBANON	Gabriel Acar & Fils s.a.r.l.	Dahr-el-Jamal Zone Industrielle, Sin-el-Fil B.P. 80484	Beyrouth	Phone: +961 (0) 1 - 49 82 72 Fax: +961 (0) 1 - 49 49 71	gacar@beirut.com

Diese technische Unterlage hat gesetzlichen Schutz (DIN 34)

MALAYSIA	Flender Singapore Pte. Ltd.	Representative Office 37 A-2, Jalan PJU 1/39 Dataran Prima	47301 Petaling Jaya Selangor Darul Ehsan	Phone: +60 (0) 3 - 78 80 42 63 Fax: +60 (0) 3 - 78 80 42 73	flender@tm.net.my
PAKISTAN	A. Friedr. Flender AG	Postfach 1364	46393 Bocholt	Phone: +49 (0) 28 71 - 92 22 59 Fax: +49 (0) 28 71 - 92 15 16	ludger.wittag@flender.com
PHILIPPINES	Flender Singapore Pte. Ltd.	Representative Office 28/F, Unit 2814, The Enterprise Centre, 6766 Ayala Avenue corner, Paeso de Roxas	Makati City	Phone: +63 (0) 2 - 8 49 39 93 Fax: +63 (0) 2 - 8 49 39 17	junt@flender.com.ph
BAHRAIN / IRAQ LYBIA / JORDAN OMAN / QATAR U.A.E. / YEMEN	Flender Güc Aktarma Sistemleri Sanayi ve Ticaret Ltd. Sti.	Middle East Sales Office IMES Sanayi Sitesi E Blok 502, Sokak No. 22	34776 Dudullu - Istanbul	Phone: +90 (0) 2 16 - 4 99 66 23 Fax: +90 (0) 2 16 - 3 64 59 13	meso@flendertr.com
SAUDI ARABIA	South Gulf Sands Est.	Bandaria Area, Dohan Bldg. Flat 3/1, P.O. Box 32150	Al-Khobar 31952	Phone: +966 (0) 3 - 8 87 53 32 Fax: +966 (0) 3 - 8 87 53 31	adelameen@awalnet.net.sa
SINGAPORE	Flender Singapore Pte. Ltd.	13 A, Tech Park Crescent	Singapore 637843	Phone: +65 (0) - 68 97 94 66 Fax: +65 (0) - 68 97 94 11	flender@singnet.com.sg www.flender.com.sg
SYRIA	Misrabi Co & Trading	Mezzeh Autostrade Transportation Building 4/A, 5th Floor P.O. Box 12450	Damascus	Phone: +963 (0) 11 - 6 11 67 94 Fax: +963 (0) 11 - 6 11 09 08	ismael.misrabi@gmx.net
TAIWAN	Flender Taiwan Limited	1F, No. 5, Lane 240 Nan Yang Street, Hsichih	Taipei Hsien 221	Phone: +886 (0) 2 - 26 93 24 41 Fax: +886 (0) 2 - 26 94 36 11	flender_tw@flender.com.tw
THAILAND	Flender Singapore Pte. Ltd.	Representative Office Talay-Thong Tower, 53 Moo 9 10th Floor Room 1001 Sukhumvit Rd., T. Tungsukla	A. Sriracha Chonburi 20230	Phone: +66 (0) 38 - 49 51 66 - 8 Fax: +66 (0) 38 - 49 51 69	contact@flender.th.com
VIETNAM	Flender Singapore Pte. Ltd.	Representative Office Suite 22, 16F Saigon Tower 29 Le Duan Street, District 1	Ho Chi Minh City	Phone: +84 (0) 8 - 8 23 62 97 Fax: +84 (0) 8 - 8 23 62 88	flender_vn@flender.com.vn
AUSTRALIA					
	Flender (Australia) Pty. Ltd.	Head Office 9 Nello Place, P.O. Box 6047 Wetherill Park	N.S.W. 2164, Sydney	Phone: +61 (0) 2 - 97 56 23 22 Fax: +61 (0) 2 - 97 56 48 92	sales@flender.com.au www.flender.com.au
	Flender (Australia) Pty. Ltd.	Sales Offices Suite 3, 261 Centre Rd. Bentleigh	VIC 3204, Melbourne	Phone: +61 (0) 3 - 95 57 08 11 Fax: +61 (0) 3 - 95 57 08 22	sales@flender.com.au
	Flender (Australia) Pty. Ltd.	Suite 5, 1407 Logan Rd. Mt. Gravatt	QLD 4122, Brisbane	Phone: +61 (0) 7 - 34 22 23 89 Fax: +61 (0) 7 - 34 22 24 03	sales@flender.com.au
	Flender (Australia) Pty. Ltd.	Suite 2 403 Great Eastern Highway	W.A. 6104 Redcliffe - Perth	Phone: +61 (0) 8 - 94 77 41 66 Fax: +61 (0) 8 - 94 77 65 11	sales@flender.com.au
NEW ZEALAND	Flender (Australia) Pty. Ltd.	9 Nello Place, P.O. Box 6047 Wetherill Park	N.S.W. 2164, Sydney	Phone: +61 (0) 2 - 97 56 23 22 Fax: +61 (0) 2 - 97 56 48 92	sales@flender.com.au

Diese technische Unterlage hat gesetzlichen Schutz (DIN 34)

Declaration by the manufacturer

as defined by machinery directive 98/37/EC Annex II B

We hereby declare that the products supplied by us are meant for being installed in a machine and that their putting into operation is prohibited until it has been ascertained that the machine, in which these components will be installed, corresponds to the regulations of the EC guideline (original version 98/37/EC incl. the further amendments).

This declaration by the manufacturer takes into consideration all harmonized standards - as far as applicable to our products - published by the EC Commission in the Official Journal of the European Community.

Bocholt, 2004-04-06
Date

Signature (Director HDE Engineering)

Diese technische Unterlage hat gesetzlichen Schutz (DIN 34)

General

The electric resistance in the resistance thermometer sensor changes as the temperature fluctuates. This change of resistance on the PT 100 or the converted output signal of the measuring transducer (4 to 20 mA) can be used to measure temperature with an evaluating instrument or to define a switch point by means of limit switches.

Operation

Pt 100 measuring thermometer sensor

The electrical conductivity of metal (here platinum) is based on the mobility of conduction electrons. As the temperature rises, the movement of the atoms in the metal lattice about their rest position intensifies and so obstructs the electrons flowing to the plus pole of a power source. This obstruction sets up a resistance in linear proportion to the temperature.

To generate the output signal a constant test current (approx. 1 mA) is applied to the Pt 100. The resistance in the Pt 100 causes a drop in voltage ($U = R \cdot I$), which can be evaluated.

Measuring transducer

The two-wire measuring transducer is mounted in the J-head only if requested by the customer. It should be noted that here only a single connection is possible.

The measuring transducer converts the temperature-dependent resistance to a standard uniform signal of 4 to 20 mA. This signal can be transmitted over long distances without interference.

Technical Date - Pt 100

– Type of protection Terminal head:	IP 65
– Tolerance class:	DIN IEC 60751 Class B (at 0 °C ±0.3 K, at 100 °C ±0.8 K)
– Ambient temperature range for J head:	–20 °C to +100 °C
– Ambient temperature range for protective tube:	–50 °C to +200 °C
– Test temperature range:	–50 °C to +150 °C

Material

– Terminal head:	GD-AlSi9Cu3
– Protective sleeve for measuring thermometer sensor:	1.4571
– Spring:	wire DIN 2076-A-0.8 (stainless steel)
– Guide tube:	1.4571
– Terminal base:	ceramic
– Adapter:	1.4301
– Gasket	NBR (Perbunan)

Diese technische Unterlage hat gesetzlichen Schutz (DIN 34)

Technical data - Measuring transducer

– Measuring input:	Pt 100 (DIN EN 60751)
– Measuring range:	–50 °C to +150 °C
– Ambient temperature:	–20 °C to +85 °C
– Terminal type:	two-wire
– Minimum measuring range:	25 K
– Maximum measuring range:	1050 K
– Sensor line resistance with three-wire connection:	≤ 11 Ω per line
– Sensor line resistance with two-wire connection:	0 Ω per line resistance
– Sensor current:	≤ 0,5 mA
– Measuring rate:	continuous measurement, as signal path analog

Measuring circuit monitoring system

– Drop below range:	falling to ≤ 3.6 mA
– Rise over range:	rising to ≥ 22 mA ... < 28 mA (typical 24 mA)
– Probe short circuit:	≤ 3,6 mA
– Probe and line break:	positive: ≥ 22 mA ... < 28 mA (typical 24 mA) negative: ≤ 3,6 mA

Output

– Output signal:	impressed DC 4 ... 20 mA
– Transient response:	temperature-linear
– Transmission accuracy:	≤ ± 0.1 %
– Attenuation of residual ripple of feed voltage:	40 dB
– Working resistance (Rb):	$RB = \frac{U_B - 7{,}5\ V}{22mA}$
– Influence of working resistance:	≤ ± 0,02 % / 100 Ω relative to measuring range final value of 20 mA
– Adjustment time with temperature change:	≤ 10 ms
– Balancing conditions:	DC 24 V / approx. 22 °C
– Balancing accuracy:	≤ ± 0.2 % relative to measuring range final value of 20 mA

Voltage supply

– Voltage supply (Ub):	DC 7.5 ... 30 V
– Pole confusion protection:	yes
– Voltage supply influence:	≤ 0.01 % / V deviation of 24 V relative to measuring range final value of 20 mA

Environmental influences

– Operating temperature range:	–40 to +85 °C
– Temperature influence:	≤ 0.01 % / K deviation of 22 °C relative to measuring range final value of 20 mA
– Climate resistance:	rel. humidity ≤ 95 % on annual average without dew contact
– Vibration strength:	acc. to GL characteristic 2
– EMV:	EN 61326

Housing

– Material:	Polycarbonate (encapsulated)
– Screw connection:	≤ 1.5 mm^2
– Assembly:	in terminal head Form J
– Mounting position:	any
– Weight:	approx. 12 g

Diese technische Unterlage hat gesetzlichen Schutz (DIN 34)

Connection

The customer can minimise measuring inaccuracies by using multiple wires. At Flender, as a rule, a 3- or 4-wire arrangement from an additional terminal box is provided for (Fig. 1, 2). At the customer's specific request, the 3/4-wire arrangement can be used from the J-head (Figure 4, 5). Through lack of space, however, the 4-wire arrangement is possible only with a single connection (Fig. 5).

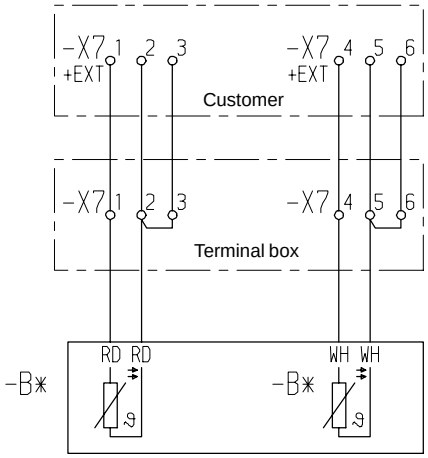

Resistance thermometer

Fig. 1: 3-wire arrangement from terminal box

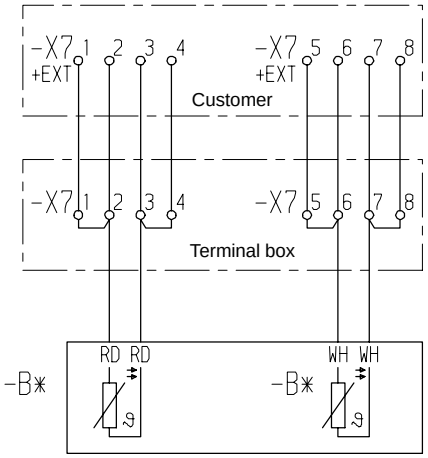

Resistance thermometer

Fig. 2: 4-wire arrangement from terminal box

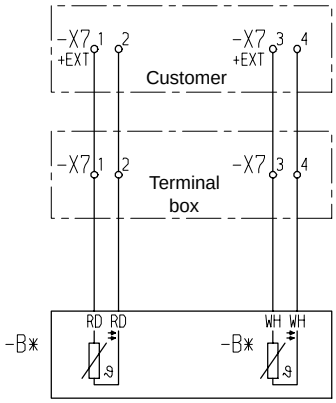

Resistance thermometer

Fig. 3: 2-wire circuit from terminal head of Pt 100

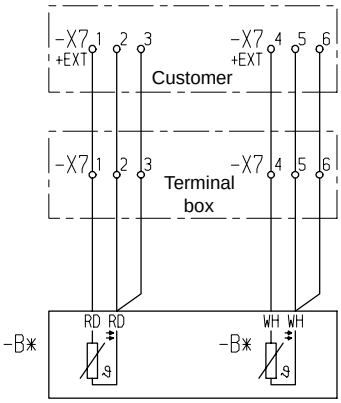

Resistance thermometer

Fig. 4: 3-wire circuit from terminal head of Pt 100

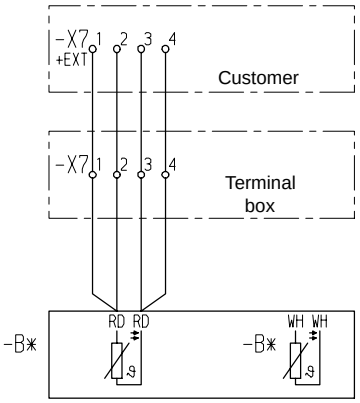

Resistance thermometer

Fig. 5: 4-wire circuit from terminal head of Pt 100

Connection for measuring transducer

	Connection for		Connection values		
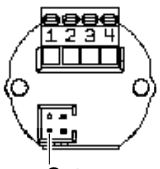 Setup		Voltage supply DC 7.5 ... 30 V Current output 4 ... 20 mA	+1 -2	$R_B = \frac{U_b - 7.5\ V}{22mA}$ R_B = Working resistance U_b = Voltage supply	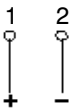
	Analog inputs				
		Resistance thermometer in two-wire circuit	3 4	series $R_L = 0\ \Omega$	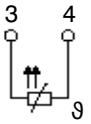

Types

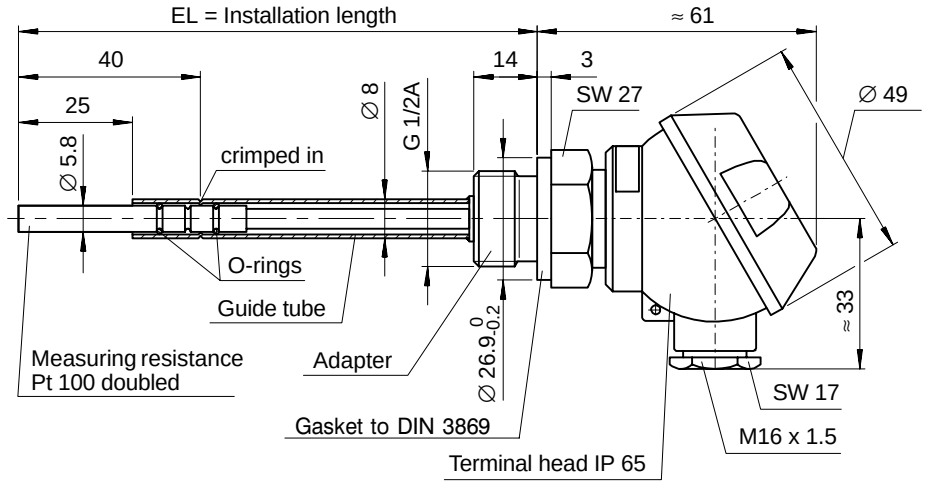

Fig. 6: Resistance thermometer F 6100-1

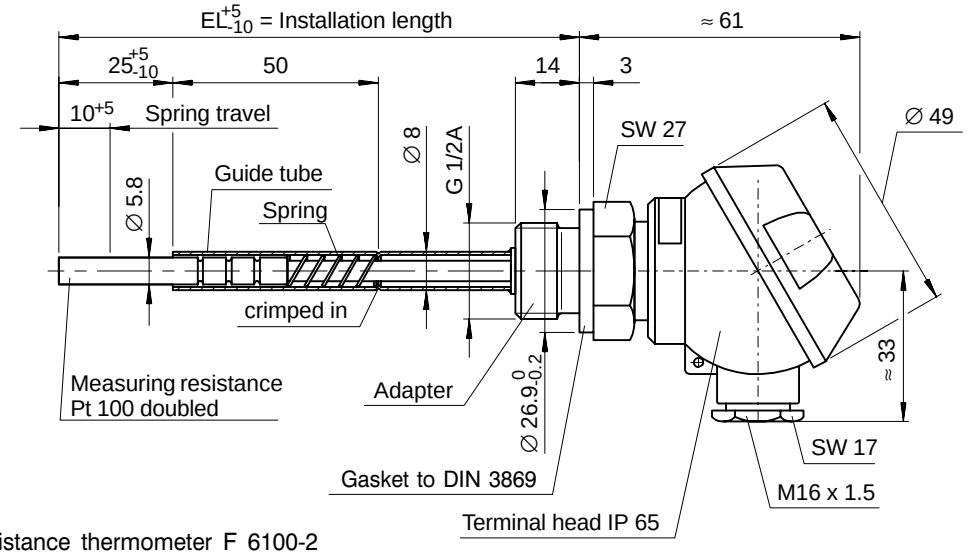

Fig. 7: Resistance thermometer F 6100-2

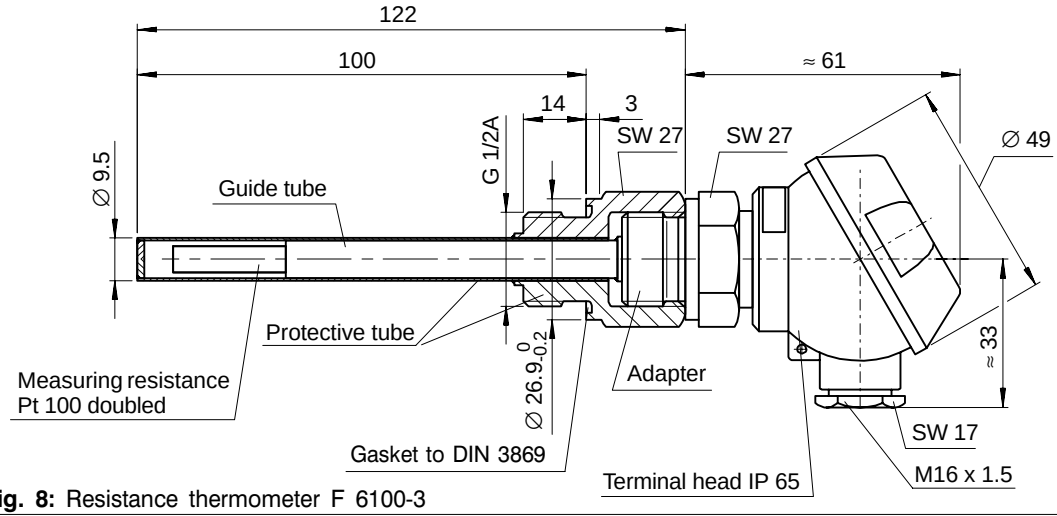

Fig. 8: Resistance thermometer F 6100-3

Diese technische Unterlage hat gesetzlichen Schutz (DIN 34)

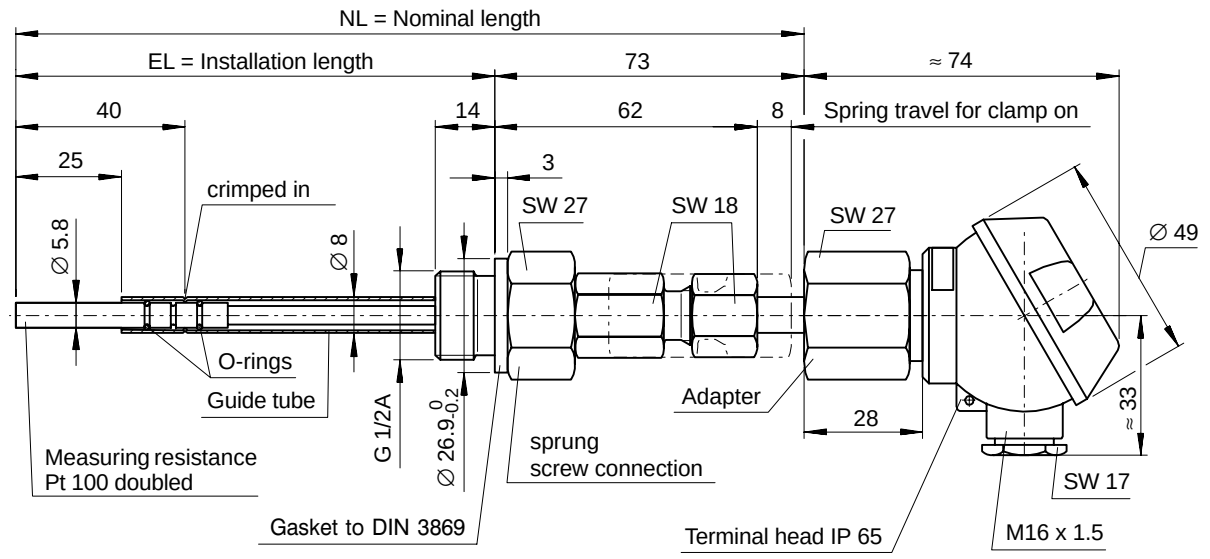

Fig. 9: Resistance thermometer F 6100-4

Adjustment by means of sprung screw connection

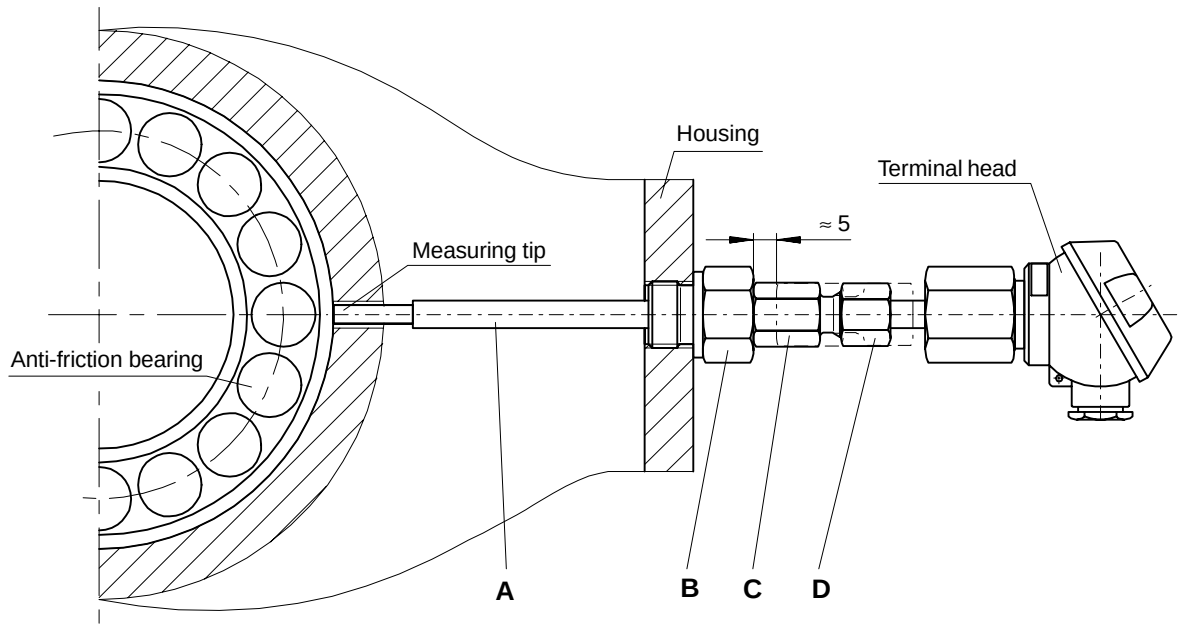

a) Insert guide tube ”A” into hole in housing until the measuring tip of the resistance thermometer makes contact.

b) Screw screw connection ”B” into the housing as far as it will go.

c) Pull out screw connection ”C” approx. 5 mm towards the terminal head. Then lock nut ”D” with screw connection ”C”. This ensures that the pretensioned spring keeps the measuring tip permanently in contact with the part to be measured.

Diese technische Unterlage hat gesetzlichen Schutz (DIN 34)

These operating instructions are binding for breathers according to FLENDER works standard W 5122.

Mounting

The thread of the filter has to be coated with sealing compound LOCTITE 572 before screwing it into the female thread.

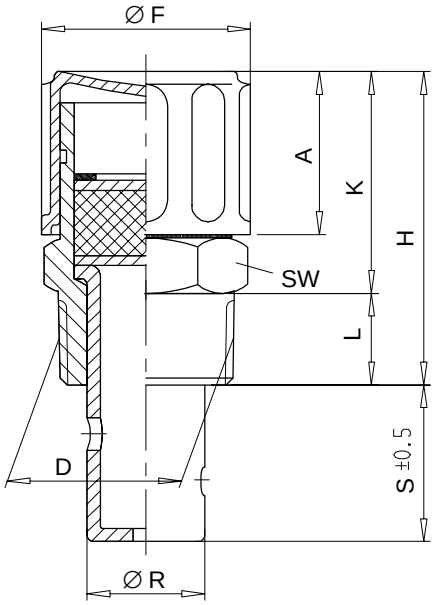

D	SW	L	K	H	A	F	R	S
R 1/4	22	8	23	35	19	28	8	16.5
R 1/2	22	12	26	38	19	28	10	17
R 3/4	27	14	32	46	25	32	18	23

Material: Stainless steel
Tubes made out of oil-resistant plastics

Temperature resistance: up to 120 °C

Design: Tapered thread acc. to DIN 2999 (Taper 1 : 16)

Diese technische Unterlage hat gesetzlichen Schutz (DIN 34)

RHD/V/Z – Non-return valve

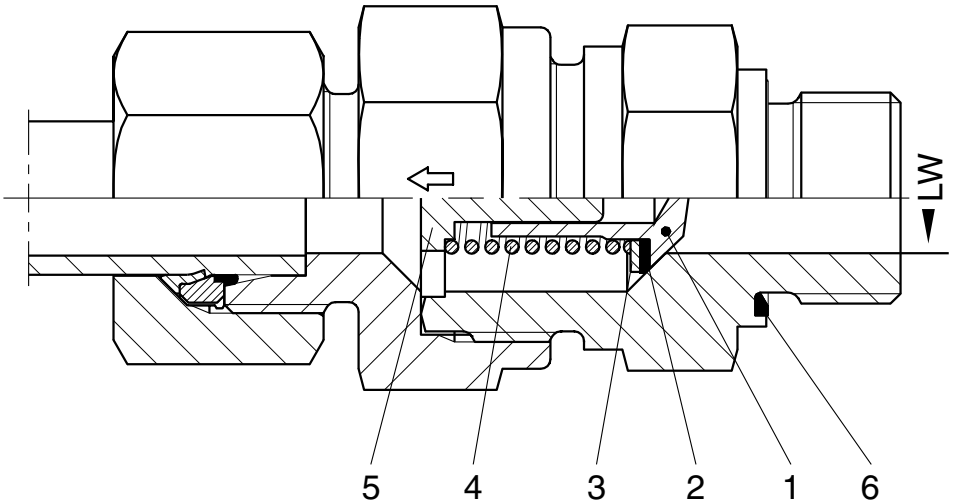

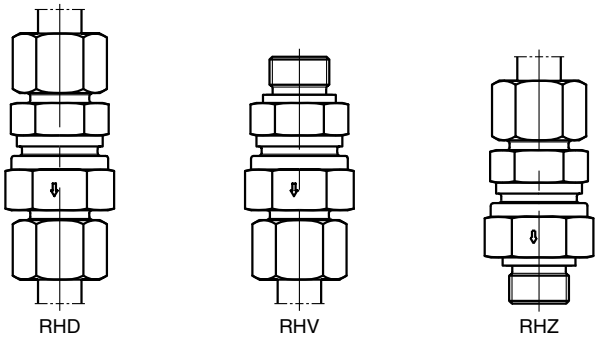

Item 1: cone
Item 2: packing disc
Item 3: top disc
Item 4: spring
Item 5: passage disc with guide pin
Item 6: Eolastic-sealing

LW = Inlet diameter (mm)

Characteristics:

Sealing achieved by using a 90° cone with a packing washer of synthetic material. Valve has a lift stop therefore safe free outlet. Shock-absorbing and muffled opening. No reduction of cross section. Maximum flow velocity not more than 8 m/sec (for higher flow velocities special tests are required). Sealing of male stud thread by Eolastic soft seal with types RHV and RHZ.

Opening pressure:

Approx. 1 bar (on request also 0.5–2 and 3 bar are available; please specify for order). For pressure see appropriate tables. Tolerance of opening pressure: ±20 %.

Material:

Steel zinc-plated (A3C), seals of NBR (Perbunan).
On request of FPM (Viton).
Stainless steel (71), seals of FPM (Viton).
Brass-CuZn35Ni2 (SoMs59 material 2.0540) with internal parts of 1.4571 (on request).

Assembly:

See Parker EO assembly instructions.
Packaging:
All non-return valves dust-proof packed.

Purpose:

Hydraulic oil, not easily inflammable hydraulic fluids (but not HFC group; for HFD group; seals made of FPM are necessary), compressed air (please indicate with order).
Not useable for steam, oxygen or combustible/explosive gases.
Corrosion inducing media. For use with water, please indicate kind of water and any additives.

Safety Instructions

EO Tube Fittings are Safe High-Pressure Connections.

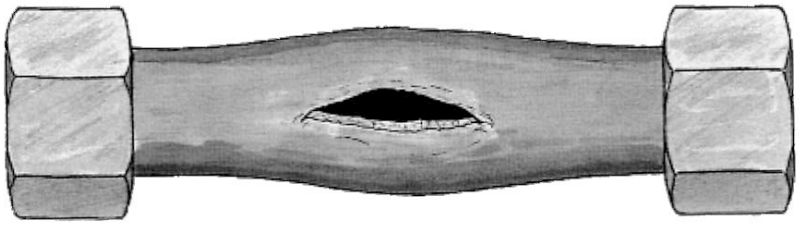

A carefully assembled EO fitting will provide a sealed joint even up to tube burst. Experience has shown that break-downs, tightening-up and leaks can be avoided by following the safety instructions. Please review your fitting procedures.

Safety Instructions Assembly

- During a progressive ring and EO-2 fitting assembly the tube has to bottom up in the stud or in the tool. Without tube bottoming the ring cannot bite sufficiently. Under load the connection can fail due to tube shear.
- Uncompletely assembly will reduce the pressure and vibration capability of a fitting. It can reduce the life cycle time of a connection and leakage can occur. In extreme cases the connection can fail due to tube shear or tube crack. Presetted progressive ring fittings need a final assembly according to assembly instructions.
- After opening a tube connection, the unit has to be retighten with the same force used during prior assembly. Undertightening can result in leakage and can reduce the vibration capability.
  Overtightening can reduce the possibilities of repeated assembly. In extreme cases the components can be destroyed.
- Stainless steel progressive ring fittings have to be presetted in hardened tools. Otherwise the conection may fail under load due to tube shear.

General safety instructions

- EO tube fittings are intended solely for connections for fluid applications.
- Observe tube recommendations. Non-standard materials or tolerances lead to incorrect fitting.
- Do not use bearing balls, fitting pins or tapered pins instead of EO plugs (VKA) as blanking parts for 24° cones.
- Do not assemble progressive rings and functional nuts on selfmade standpipe stud ends. There is a risk of false assembly with the result of connection shear under load.
- The use of steel cutting rings for stainless steel tubes or other unauthorised tool combinations leads to incorrect assembly.
- Tube connection and fitting body once assembled, should remain together. Fitting body is to be used once only for pre-assembly.
- Air bleeding of tube fittings which are under pressure can be dangerous.
- Tube under tension can lead to vibration failure. Tube length and bend angles are to be adhered to precisely. Fix tube lines with tube clamps.
- Tubes are not to be clamped to one another but to suitable fixed points. Plate brackets, cable connections and fixing elements are not suitable. Tubes are not mountings on which to integrate other components e.g. filters, ventilators or shut-off valves.
- Prevent oscillation, pressure surges and inherent strain by using flexible hoses for example.
- Under and overtightening of fittings during assembly reduces the capacity for withstanding pressure and vibration loads and therefore reduces the life of the tube fitting. Leaks from the tube can occur under these circumstances.
- When dismantling/transporting and re-assembling, make sure that no dirt enters the system, that the connection elements (threads, sealing surfaces) are not damaged, seals are not lost and tubes are not bent or flattened. We recommend the use of suitable protective caps.
- Disassembled fittings are to be checked for accuracy and damage and replaced if necessary.
- Do not use hand cutters or tube cutters.
- Impurities and swarf can lead to disruptions in the system and leaks.
- The operating parameters given (e.g. pressure, temperature, medium compatibility) are to be adhered to.
- Avoid flow rates > 8 m/s. The resulting forces are high and can destroy the tube lines.
- Relevant guidelines (e.g. CE, ISO, BG, TÜV, DIN) are to be observed.
- Weld fittings are manufactured out of weldable materials. No other fittings are suitable for welding.
- EO Niromont is a high-performance lubricant. The use of other lubricants generally leads to an increase in assembly force.
- The tools and lubricants recommended by EO guarantee safe assembly.
- If tools and assembly equipment of other manufacturers are used, the function and assembly results have to be checked.
- Fittings are to be handled with care.
- Tubelines need to be adapted tension free of the relevant connectors before assembly. An easy turning of the nut is required for the complete thread length. Otherwise leakage can occur. In extreme cases with additional vibrations tube cracks can occur.
- Vibrations have to be clampened by tube clamps. Independant vibration units need to be separated with hoses. Otherwise tube cracks can occur.

In case of doubt please contact your Parker representative!

These operating instructions are binding for oil drain plugs (ball valves with full straightway) to Flender Works Standard W 5100.

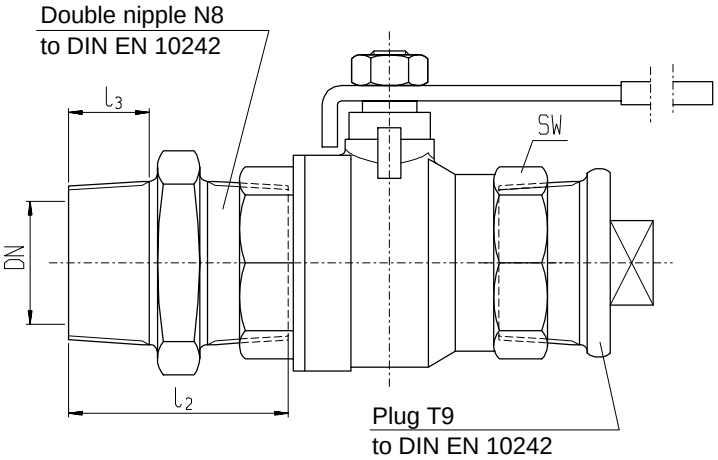

Double parallel nipple and plug with thread sealed with hemp and Fermit.

Fig. 1: Ball valve, complete with double nipple and plug

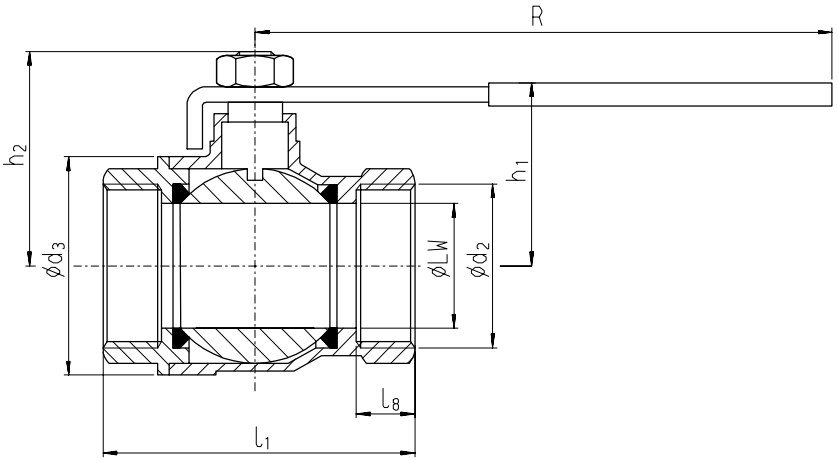

Fig. 2: Component in sectional view

Nominal width of connection DN	Pipe thread d_2	LW	Rated pressure PN bar max.	d_3	h_1	h_2	l_1	l_2	Threaded length l_3	l_8	R	SW	Weight kg approx.
8	G 1/4	9	25	23,5	21	26	44,5	36	9,7	10	86	20,0	0,16
10	G 3/8	10	25	23,5	25	31	44,5	38	10,1	10	86	20,0	0,17
15	G 1/2	14	25	30,0	27	33	50,0	44	13,2	12	86	25,0	0,19
20	G 3/4	19	25	37,0	31	37	55,0	47	14,5	12	106	30,5	0,37
25	G 1	25	25	45,0	35	41	66,0	53	16,8	14	106	37,5	0,58
32	G 1 1/4	32	25	56,5	45	51	80,0	57	19,1	17	148	46,5	0,92
40	G 1 1/2	40	25	70,0	53	60	90,0	59	19,1	17	148	54,0	1,35
50	G 2	50	25	85,0	63	70	108,0	68	23,4	21	152	65,0	2,32

Diese technische Unterlage hat gesetzlichen Schutz (DIN 34)

Material:	Housing:	nickel-plated brass
	Ball:	chromium-plated brass
	Valve key:	galvanized steel with red plastic sheathing
	Ball seal:	Teflon (PTFE)
	Double nipple:	GTW35-V
	Plug:	GTW35-V

Operable temperature range: from -20 °C to max. +170 °C

If oil drain plugs are combined with screw connections, a suitable ring must be provided. This ring bridges the too short thread in the oil drain plug and brings the screw connection into contact on the end face (see Fig. 3).

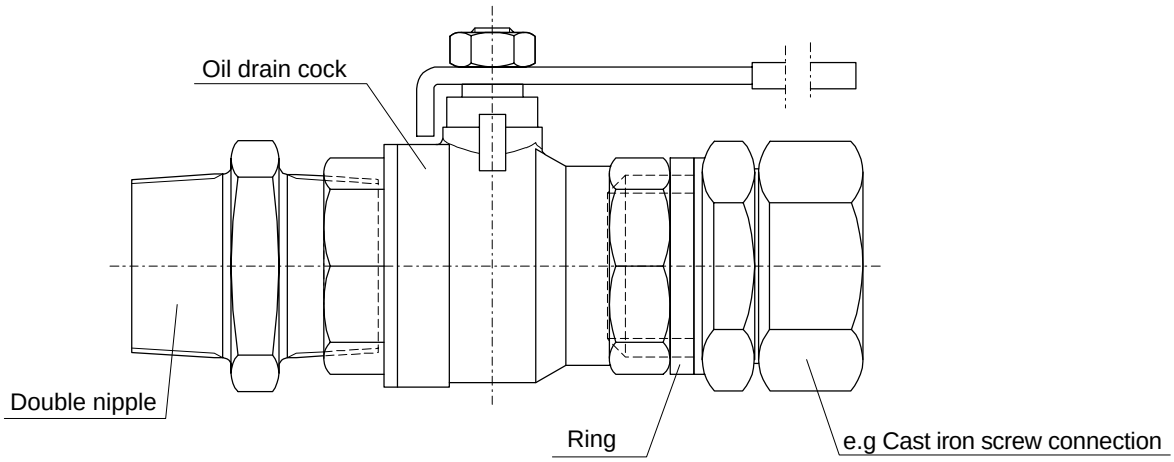

Fig. 3: Oil drain plug with double nipple, ring and cast iron screw connection

Diese technische Unterlage hat gesetzlichen Schutz (DIN 34)

Inductive sensor
with extended temperature range
Bi5-S18-AP7/S100

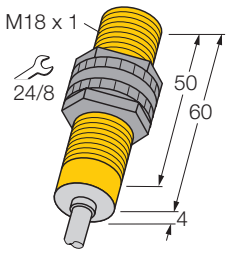

- **threaded barrel, M18 x 1**
- **plastic, PA12-GF30**
- **for temperatures up to 100°C**
- **3-wire DC, 10..0.30 VDC**
- **normally open pnp output**
- **cable connection**

Wiring diagram

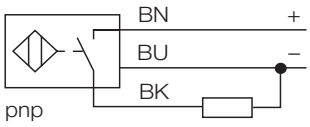

Type	Bi5-S18-AP7/S100
Ident-No.	17541
Rated operating distance Sn	5 mm
Mounting mode	flush
Hysteresis (switching distance)	3... 15 %
Min. repeat accuracy	≤ 2 %
Temperature drift	≤ ± 10 %
	≤ ± 20 %, ≥ +70 °C
Operating temperature	-25 ...+ 100 °C
Rated operational voltage (DC) U_B	10... 30 VDC
Max. ripple	≤ 10 % U_{pp}
Rated operational current (DC) I_e	≤ 200 mA
	see derating curve
No-load current I_0	≤ 10 mA
Max. OFF-state current	≤ 0,1 mA
Max. switching frequency	≤ 1 kHz
Rated insulation voltage	≤ 0,5 kV
Output function	3-wire, normally open, PNP
Short-circuit protection	no
Max. voltage drop at I_e	≤ 0,7 V
Wire breakage / reverse polarity protection	yes / yes (power supply)
Housing style	threaded barrel; M18 x 1
Dimensions	64 mm
Housing material	plastic, PA12-GF30
Active face	plastic, PA12-GF30
Max. fixing torque of coupling nut	2 Nm
Wiring	cable
Cable	Ø 5,2, LiYY-T105, PVC, 2 m
Cable cross section	3 x 0,5 mm^2
Vibration resistance	55 Hz (1 mm)
Shock resistance	30 x g (11 ms)
Degree of protection	IP67

Function principles

Inductive proximity switches are designed for wear-free non-contact detection of metal objects. For this they use a high-frequency electro-magnetic AC field that interacts with the target. With inductive sensors, this field is generated by an LC resonant circuit with a ferrite core coil. Special inductive sensors versions can be used at temperatures of -40°C up to +160°C.

Derating curve

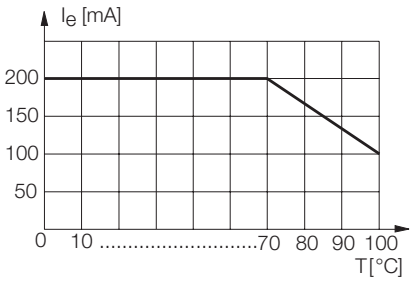

Subject to change without notice • © Hans Turck GmbH & Co.KG 2002 • Edition: • 19.02.2004

Hans Turck GmbH & Co.KG • Postfach • D-45466 Mülheim an der Ruhr • Telefon 02 08/49 52-0 • Telefax 02 08/49 52-264

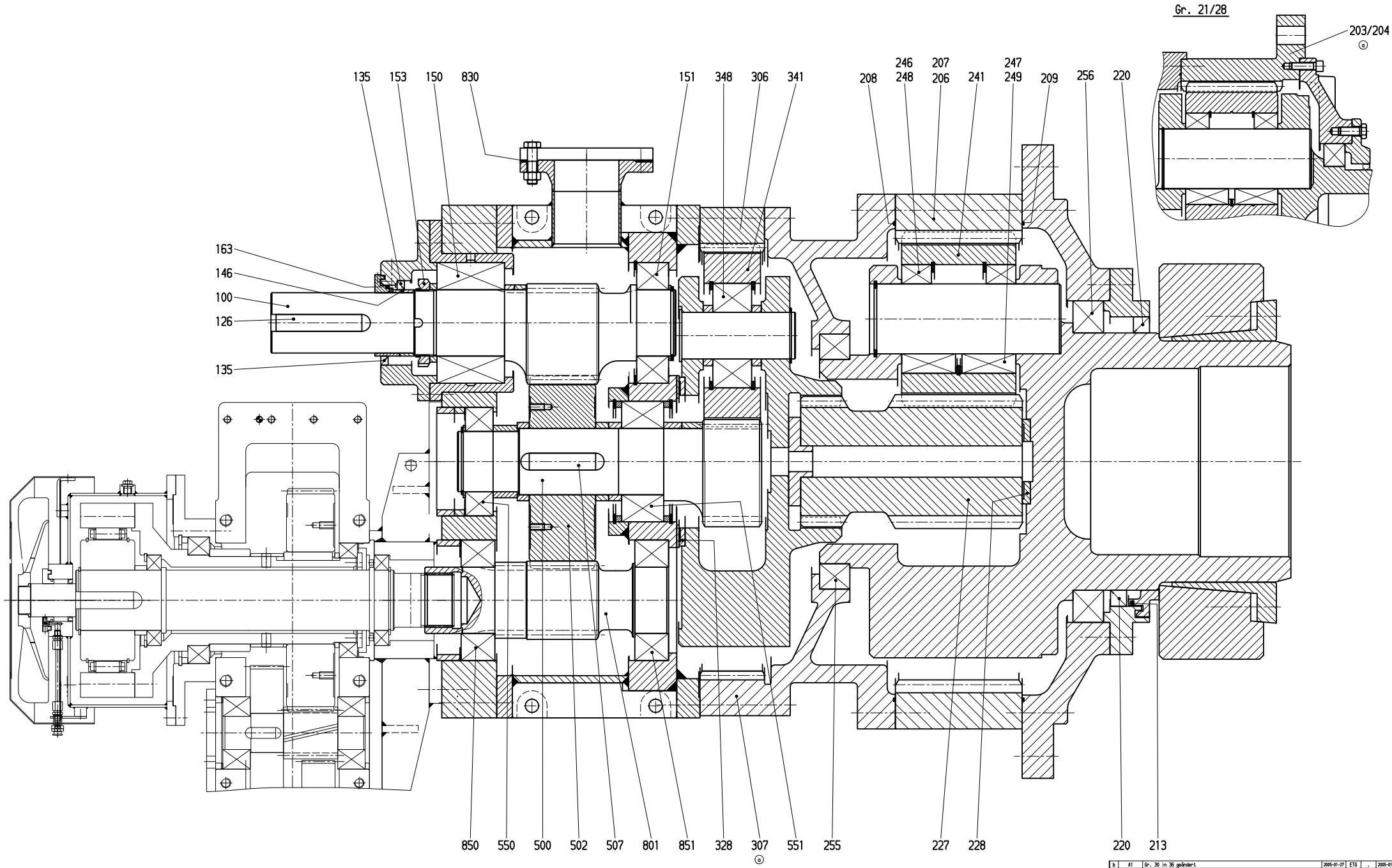

Teile nach Ersatzteilliste je nach Ausführung

Parts acc. to spare parts list depending on design

b	A1	Gr. 30 in 36 geändert	2005-01-27	ETG	2005-01-27
a	BB/MI	Teil-Nr. 307, 203, 204 hinzu	2002-09-10	STG	2002-09-12
Ä1	Feld	Änderungsbeschreibung	Datum	Name	Norm 2000-08-30

ZUL. Abweichungen für Maße ohne Tol.-Angaben mittel DIN 7168 — Auftr.-Nr. — gesichert

FLENDER

Nicht gekennzeichnete Oberflächen. — Rauhwerte Ra in µm

Gez.	EW3	2000-08-25	Linde
Gepr.	EW3	2000-08-28	Wahlbrock
Norm	NOR	2000-08-28	Luxer
Abt.		Datum	Name

Maßstab — Gewicht (kg) — Trägheitsmoment J (kgm²)

Werkstoff /-Nr.

Benennung: ERSATZTEIL-ZCHNG — Schl.-Nr.: 0110

P25A Gr. 21 - 36 / K.UF Gr. 5 - 8 Ⓑ

Rohteil nach Zeichnung — sonst nach Zeichnung

Format Art Zeichnungs-Nr. Ä1: 5 8 898 116 b

Ersatz für — Aus Zchng. 5 867 733

Basis-Nr. Modell-Nr. Ä1 Anz. Teil

Maße in mm — Schutzvermerk ISO 16016 beachten

PLOTT-DATUM: 05-MAY-2006 10:30:15 H. Raschle/HEVZ

/80/EL/KM/MV/CA

119/428

FLENDER	**Ersatzteilliste (EL)** Spare parts list	**Bauart** Type **P2DA** **Größe** Size **23,0** **Übersetzung** ratio **82,781**	**Seite** Page 1/2

Bei Korrespondenz bitte angeben
Please quote in correspondence **EL 4190294-080 DE/EN**

Hierzu gehört Zeichnungs-Nr.
Please refer to DWG No. **8898116**

	Teil-Nr. Part No.	Menge No. off		Benennung Description	Zeichnungs-Nr. Drawings No.	Material-Nr. Ident no.	Gw(kg) Weight
E	0100	1	ST	STRDWELLE RP 265,0/2,27 1.6587 PINION SHAFT RP 265,0/2,27 1.6587	5867954/-	000.001.254.583	80,0
E	0135	1	ST	WDR 130X160X15 BAUM W 5710 75FPM585 SHAFT SEAL 130X160X15 BAUM W 5710		000.000.781.850	0,2
E	0146	1	ST	RING 120,0X130,0X041,5W 34CrNiMo6 RING 120,0X130,0X041,5W 34CrNiMo6	5867054/E	000.000.626.178	0,6
E	0150	1	ST	EINBAUS 32226/DF ST-KAEF PAIRED TAPER ROLLER BEARINGS 32226/DF		000.000.379.980	24,4
E	0151	1	ST	WAELZL 2222 NU EC D 5412 SKF/FAG ROLLING CONTACT BEARING 2222 NU EC D 541		000.000.379.912	6,7
E	0163	3	ST	RING,AS 160/06,0X1,5 W 5730 FED-ST LAMELLAR RING, AS (FEY) 160/06,0X1,5 W 5		000.000.347.212	0,0
E	0206	1	ST	STIRNRAD,INVERZ P2 23 34CrNiMo6 INTERN.TOOTHED GEAR WHEEL P2 23	5867715/E	000.001.288.546	353,0
E	0208	3,00	M	SCHNUR-RD 04,0 72NBR872 ROUND CORD 04,0 72NBR872		000.000.307.199	0,1
E	0209	3,00	M	SCHNUR-RD 04,0 72NBR872 ROUND CORD 04,0 72NBR872		000.000.307.199	0,1
E	0213	3	ST	RING,AS 500/12,0X2,5 W 5730 FED-ST LAMELLAR RING, AS (FEY) 500/12,0X2,5 W 5		000.000.347.005	0,4
E	0220	1	ST	WDR 460X500X20 C D 3760 72NBR902 SHAFT SEAL 460X500X20 C D 3760 72NBR902		000.000.770.403	1,2
E	0227	1	ST	STIRD-PLA GP 272,4/1,76 1.6587 PLANET PINION GP 272,4/1,76 1.6587	5867004/K	000.001.254.585	88,5
E	0228	1	ST	RING-ANLAUF 065X160X10 PTFE/25C TIE PIECE 065X160X10 PTFE/25C	5867035/A	000.000.626.157	0,3
E	0241	3	ST	STIRD-PLA GP 272,4/1,76 1.6587	5867005/I	000.001.254.588	91,0
E	0249	6	ST	WAELZL185030 SL C3 2S ROLLING CONTACT BEARING185030 SL C3 2S		000.000.379.902	13,3
E	0255	1	ST	WAELZL181872 SL ROLLING CONTACT BEARING181872 SL		000.000.379.268	11,7
E	0256	1	ST	WAELZL181896 SL ROLLING CONTACT BEARING181896 SL		000.000.380.873	35,2
E	0306	1	ST	STIRNRAD,INVERZ PN 23 34CrNiMo6 INTERN.TOOTHED GEAR WHEEL PN 23	5867033/H	000.000.807.254	131,0
E	0328	1	ST	RING-ANLAUF 255X315X10 PTFE/25C TIE PIECE 255X315X10 PTFE/25C	5867048/B	000.000.626.164	0,4
E	0341	3	ST	STIRD-PLA GP 231,5/2,20 1.6587 PLANET PINION GP 231,5/2,20 1.658	5867024/A	000.001.260.263	32,8
E	0348	3	ST	WAELZL 22320 E/C3 D 635 SKF ROLLING CONTACT BEARING 22320 E/C3 D 635		000.000.380.341	13,0
E	0500	1	ST	STRDW-PLA GP 231,5/2,20 1.6587 PLANETARY CYLINDRICAL WHEEL SHAFT GP 231	5867963/B	000.001.260.265	53,0
E	0502	1	ST	STIRNRAD LP 265,0/2,27 1.6587 GEAR WHEEL LP 265,0/2,27 1.6587	5867955/A	000.001.254.634	88,8

Die mit * gekennzeichneten Teile gehören zu einer Baugruppe (G). Die Baugruppe ist nur komplett auszutauschen.
The parts marked with * belong to a subassembly (G). The subassemblymust be replaced complete.

FLENDER	Ersatzteilliste (EL) Spare parts list	Bauart / Type: P2DA Größe / Size: 23,0 Übersetzung / ratio: 82,781	Seite / Page 2/2

Bei Korrespondenz bitte angeben
Please quote in correspondence **EL 4190294-080 DE/EN**

Hierzu gehört Zeichnungs-Nr.
Please refer to DWG No. **8898116**

	Teil-Nr. Part No.	Menge No. off		Benennung Description	Zeichnungs-Nr. Drawings No.	Material-Nr. Ident no.	Gw(kg) Weight
E	0550	1	ST	WAELZL 2222 NU EC D 5412 SKF/FAG ROLLING CONTACT BEARING 2222 NU EC D 541		000.000.379.912	6,7
E	0551	1	ST	WAELZL 23224 CC/W33 D 635 MET-KAEF ROLLING CONTACT BEARING 23224 CC/W33 D 6		000.000.380.135	12,3
E	0801	1	ST	STRDWELLE RP 265,0/2,27 1.6587 PINION SHAFT RP 265,0/2,27 1.6587	6041985/A	000.001.254.827	48,2
E	0850	1	ST	WAELZL 32224 D 720 ST-KAEF ROLLING CONTACT BEARING 32224 D 720		000.000.380.754	9,0
E	0851	1	ST	WAELZL 32224 D 720 ST-KAEF ROLLING CONTACT BEARING 32224 D 720		000.000.380.754	9,0

A. Friedr.Flender AG, D 46393 Bocholt,
Tel.+ 49(0)2871/92-0, Fax+ 49(0)2871/922596, http://www.flender.com

Datum Date 05.05.2006 | HOBBOLD, HEINRICH | 2681 | Rev.:

FLENDER	**Ersatzteilliste (EL)** Spare parts list	**Bauart** Type **Größe** Size **Übersetzung** ratio	**Seite** Page 1/1

Bei Korrespondenz bitte angeben
Please quote in correspondence

EL 4190294-100 DE/EN

Hierzu gehört Zeichnungs-Nr.
Please refer to DWG No.

	Teil-Nr. Part No.	Menge No. off		Benennung Description	Zeichnungs-Nr. Drawings No.	Material-Nr. Ident no.	Gw(kg) Weight
E	0610	2	ST	LAGER-GEL GE120 UK-2RS BALL AND SOCKET JOINT GE120 UK-2RS		000.000.389.180	8,0
E	0611	4	ST	LAGER-GEL GE 90 UK-2RS BALL AND SOCKET JOINT GE 90 UK-2RS		000.000.389.178	2,7
E	0612	2	ST	DICHTUNG CD120 CELLASTO SEAL CD120 CELLASTO		000.000.625.296	0,1
E	0613	8	ST	DICHTUNG CD090 CELLASTO SEAL CD090 CELLASTO		000.000.625.269	0,1

Die mit * gekennzeichneten Teile gehören zu einer Baugruppe (G). Die Baugruppe ist nur komplett auszutauschen.
The parts marked with * belong to a subassembly (G). The subassemblymust be replaced complete.

A. Friedr.Flender AG, D 46393 Bocholt,
Tel.+ 49(0)2871/92-0, Fax+ 49(0)2871/922596, http://www.flender.com

Datum Date	HOBBOLD, HEINRICH	2681
05.05.2006	Rev.:	

FLENDER	Ersatzteilliste (EL) Spare parts list	Bauart / Type: P2DA Größe / Size: 23,0 Übersetzung / ratio: 82,781	Seite / Page: 1/2

Bei Korrespondenz bitte angeben
Please quote in correspondence **EL 4190294-120 DE/EN**

Hierzu gehört Zeichnungs-Nr.
Please refer to DWG No. **8898116**

	Teil-Nr. Part No.	Menge No. off		Benennung Description		Zeichnungs-Nr. Drawings No.	Material-Nr. Ident no.	Gw(kg) Weight
E	0100	1	ST	STRDWELLE RP 265,0/2,27 PINION SHAFT RP 265,0/2,27 1.6587	1.6587	5867954/-	000.001.254.583	80,0
E	0135	1	ST	WDR 130X160X15 BAUM SHAFT SEAL 130X160X15 BAUM W 5710	W 5710 75FPM585		000.000.781.850	0,2
E	0146	1	ST	RING 120,0X130,0X041,5W RING 120,0X130,0X041,5W 34CrNiMo6	34CrNiMo6	5867054/E	000.000.626.178	0,6
E	0150	1	ST	EINBAUS 32226/DF PAIRED TAPER ROLLER BEARINGS 32226/DF	ST-KAEF		000.000.379.980	24,4
E	0151	1	ST	WAELZL 2222 NU EC ROLLING CONTACT BEARING 2222 NU EC D 541	D 5412 SKF/FAG		000.000.379.912	6,7
E	0163	3	ST	RING,AS 160/06,0X1,5 LAMELLAR RING, AS (FEY) 160/06,0X1,5 W 5	W 5730 FED-ST		000.000.347.212	0,0
E	0206	1	ST	STIRNRAD,INVERZ P2 23 INTERN.TOOTHED GEAR WHEEL P2 23	34CrNiMo6	5867715/E	000.001.288.546	353,0
E	0208	3,00	M	SCHNUR-RD 04,0 72NBR872 ROUND CORD 04,0	72NBR872		000.000.307.199	0,1
E	0209	3,00	M	SCHNUR-RD 04,0 72NBR872 ROUND CORD 04,0	72NBR872		000.000.307.199	0,1
E	0213	3	ST	RING,AS 500/12,0X2,5 LAMELLAR RING, AS (FEY) 500/12,0X2,5 W 5	W 5730 FED-ST		000.000.347.005	0,4
E	0220	1	ST	WDR 460X500X20 C SHAFT SEAL 460X500X20 C D 3760 72NBR902	D 3760 72NBR902		000.000.770.403	1,2
E	0227	1	ST	STIRD-PLA GP 272,4/1,76 PLANET PINION GP 272,4/1,76 1.6587	1.6587	5867004/K	000.001.254.585	88,5
E	0228	1	ST	RING-ANLAUF 065X160X10 TIE PIECE 065X160X10 PTFE/25C	PTFE/25C	5867035/A	000.000.626.157	0,3
E	0241	3	ST	STIRD-PLA GP 272,4/1,76	1.6587	5867005/I	000.001.254.588	91,0
E	0249	6	ST	WAELZL185030 SL C3 2S ROLLING CONTACT BEARING185030 SL C3 2S			000.000.379.902	13,3
E	0255	1	ST	WAELZL181872 SL ROLLING CONTACT BEARING181872 SL			000.000.379.268	11,7
E	0256	1	ST	WAELZL181896 SL ROLLING CONTACT BEARING181896 SL			000.000.380.873	35,2
E	0306	1	ST	STIRNRAD,INVERZ PN 23 INTERN.TOOTHED GEAR WHEEL PN 23	34CrNiMo6	5867033/H	000.000.807.254	131,0
E	0328	1	ST	RING-ANLAUF 255X315X10 TIE PIECE 255X315X10 PTFE/25C	PTFE/25C	5867048/B	000.000.626.164	0,4
E	0341	3	ST	STIRD-PLA GP 231,5/2,20 PLANET PINION GP 231,5/2,20 1.658	1.6587	5867024/A	000.001.260.263	32,8
E	0348	3	ST	WAELZL 22320 E/C3 ROLLING CONTACT BEARING 22320 E/C3 D 635	D 635 SKF		000.000.380.341	13,0
E	0500	1	ST	STRDW-PLA GP 231,5/2,20 PLANETARY CYLINDRICAL WHEEL SHAFT GP 231	1.6587	5867963/B	000.001.260.265	53,0
E	0502	1	ST	STIRNRAD LP 265,0/2,27 GEAR WHEEL LP 265,0/2,27 1.6587	1.6587	5867955/A	000.001.254.634	88,8

Die mit * gekennzeichneten Teile gehören zu einer Baugruppe (G). Die Baugruppe ist nur komplett auszutauschen.
The parts marked with * belong to a subassembly (G). The subassemblymust be replaced complete.

A. Friedr.Flender AG, D 46393 Bocholt,
Tel.+ 49(0)2871/92-0, Fax+ 49(0)2871/922596, http://www.flender.com

Datum Date	HOBBOLD, HEINRICH	2681
05.05.2006	Rev.:	

FLENDER	Ersatzteilliste (EL) Spare parts list	Bauart / Type: P2DA Größe / Size: 23,0 Übersetzung / ratio: 82,781	Seite / Page 2/2

Bei Korrespondenz bitte angeben
Please quote in correspondence **EL 4190294-120 DE/EN**

Hierzu gehört Zeichnungs-Nr.
Please refer to DWG No. **8898116**

	Teil-Nr. Part No.	Menge No. off		Benennung Description	Zeichnungs-Nr. Drawings No.	Material-Nr. Ident no.	Gw(kg) Weight
E	0550	1	ST	WAELZL 2222 NU EC D 5412 SKF/FAG ROLLING CONTACT BEARING 2222 NU EC D 541		000.000.379.912	6,7
E	0551	1	ST	WAELZL 23224 CC/W33 D 635 MET-KAEF ROLLING CONTACT BEARING 23224 CC/W33 D 6		000.000.380.135	12,3
E	0801	1	ST	STRDWELLE RP 265,0/2,27 1.6587 PINION SHAFT RP 265,0/2,27 1.6587	6041985/A	000.001.254.827	48,2
E	0850	1	ST	WAELZL 32224 D 720 ST-KAEF ROLLING CONTACT BEARING 32224 D 720		000.000.380.754	9,0
E	0851	1	ST	WAELZL 32224 D 720 ST-KAEF ROLLING CONTACT BEARING 32224 D 720		000.000.380.754	9,0

A. Friedr.Flender AG, D 46393 Bocholt,
Tel.+ 49(0)2871/92-0, Fax+ 49(0)2871/922596, http://www.flender.com

Datum Date 05.05.2006 | HOBBOLD, HEINRICH | 2681 | Rev.:

FLENDER	**Ersatzteilliste (EL)** Spare parts list	**Bauart** Type **Größe** Size **Übersetzung** ratio	**Seite** Page 1/1

Bei Korrespondenz bitte angeben
Please quote in correspondence

EL 4190294-140 DE/EN

Hierzu gehört Zeichnungs-Nr.
Please refer to DWG No.

	Teil-Nr. Part No.	Menge No. off		Benennung Description	Zeichnungs-Nr. Drawings No.	Material-Nr. Ident no.	Gw(kg) Weight
E	0610	2	ST	LAGER-GEL GE120 UK-2RS BALL AND SOCKET JOINT GE120 UK-2RS		000.000.389.180	8,0
E	0611	4	ST	LAGER-GEL GE 90 UK-2RS BALL AND SOCKET JOINT GE 90 UK-2RS		000.000.389.178	2,7
E	0612	2	ST	DICHTUNG CD120 CELLASTO SEAL CD120 CELLASTO		000.000.625.296	0,1
E	0613	8	ST	DICHTUNG CD090 CELLASTO SEAL CD090 CELLASTO		000.000.625.269	0,1

Die mit * gekennzeichneten Teile gehören zu einer Baugruppe (G). Die Baugruppe ist nur komplett auszutauschen.
The parts marked with * belong to a subassembly (G). The subassemblymust be replaced complete.

A. Friedr.Flender AG, D 46393 Bocholt,
Tel.+ 49(0)2871/92-0, Fax+ 49(0)2871/922596, http://www.flender.com

Datum Date	HOBBOLD, HEINRICH	2681
05.05.2006	Rev.:	

Operating Instructions

BA 9702 EN 05.98

Oil supply systems type **OWGD**
Size 1 to 10

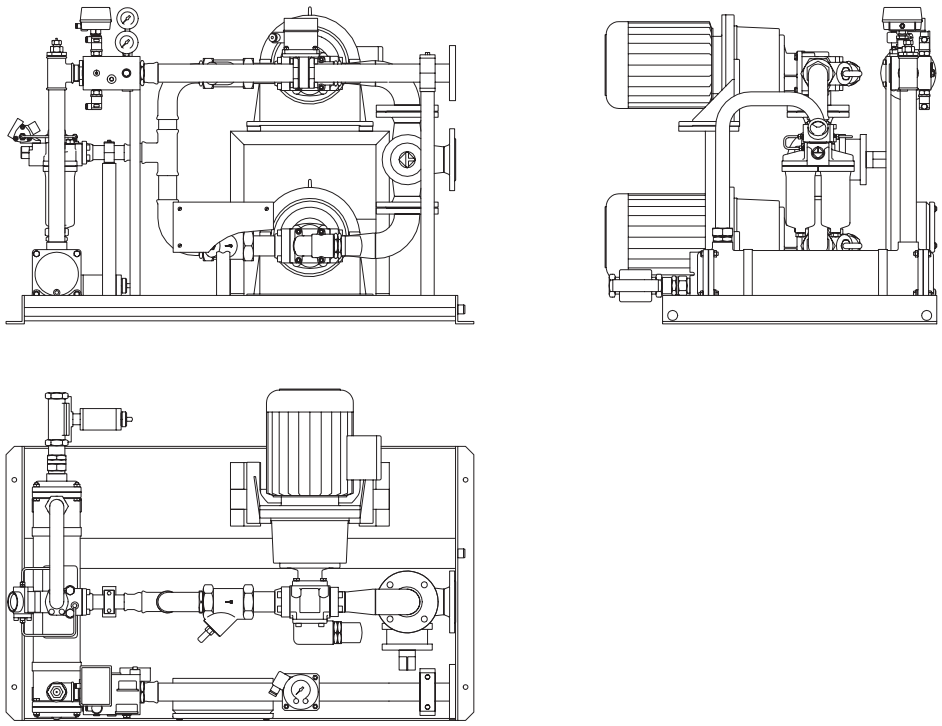

FLENDER

A. Friedr. Flender AG · 46393 Bocholt · Tel. 02871/92-0 · Telefax 02871/92-2596 · www.flender.com

Contents

1.	**Technical data**	**4**
1.1	General technical data	4
1.2	Flow quantities, dimensions, weights	4
1.3	Oil viscosity/oil grade	5
1.4	Model code	5
1.5	List of equipment	5
2.	**General notes**	**6**
2.1	General	6
3.	**Safety notes**	**6**
3.1	Safety notes	6
3.1.1	Notes and symbols in the operating instructions	7
4.	**Handling and storage**	**8**
4.1	Scope of supply	8
4.2	Handling and storage	8
4.2.1	Handling	8
4.3	Storage	9
5.	**Technical description**	**10**
5.1	General	10
6.	**Assembly**	**11**
6.1	General	11
6.2	Installation conditions	11
6.3	Installation	11
6.4	Final operations	11
7.	**Startup**	**12**
7.1	Filling with oil	12
7.2	Pump	12
7.3	Oil cooler	12
7.4	Startup	13
8.	**Operation**	**13**
8.1	Control notes	13
8.1.1	Three-way cock	14
8.1.2	Pumps	14
8.1.3	Filter	14
8.1.4	Pressure gauge	14
8.1.5	Pressure control	14
8.1.6	Thermometer	15
8.1.7	Temperature control	15
8.1.8	Flow control	15
8.1.9	Cooling water quantity regulator	15
8.1.10	General	15
8.2	Interlocking instructions	16
8.2.1	Pump enable	16
8.2.2	Gear unit enable	16
8.2.3	Warning	16
8.2.4	Gear unit stop	16
8.3	Response to malfunctions	17
8.4	Shutdown	17

9. Disturbances, reasons and remedy 18
9.1 General 18
9.2 Possible malfunctions 18

10. Maintenance and repair 19
10.1 Safety 19
10.2 Oils 19
10.3 Oil pump 19
10.4 Filter 19
10.5 Oil cooler 19
10.6 Preservation 19

11. Spare parts stock, service facility addresses 20
11.1 Spare parts stock 20
11.2 Service facility addresses 20

12. Declaration by the manufacturer 25

1. Technical data

1.1 General technical data

The nameplate of the oil supply system contains the most important technical data. These data and the contractual agreements for the oil supply system determine the limits of its proper use.

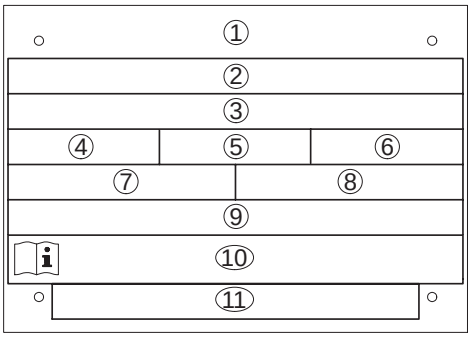

① Company logo and production location
② Special specifications
③ Order no. - position - serial no.
④ Type
⑤ Size
⑥ Model
⑦ $p_{Oil\ max}$ = max. permissible operating overpressure of oil
⑧ t_{min} = minimum starting temperature
⑨ Permissible operating pressure of water: $P_{Water\ max.}$ ... bar / ... PSI
⑩ No. of the Operating Instructions and no. of the list of equipment
⑪ Special specifications (e.g. total weight)

Note: These Operating Instructions generally comprise an order-specific list of equipment including drawings operating instructions of the accesory components (see Table 1.2).

Note: Terminal box and wiring only if ordered.

Further technical data will be found in table 1.1.

1.2 Flow quantities, dimensions, weights

Size	Pump flow quantities 50 Hz l/min	Pump flow quantities 60 Hz l/min	Dimensions l x b x h mm	Weight kg
1	7	5.6	920x720x600	115
2	12	9.6	920x720x600	115
3	20	16	920x720x600	125
4	30	24	920x720x600	130
5	52	42	1140x975x775	250
6	75	60	1140x975x775	270
7	112	90	1400x990x925	405
8	150	120	1420x1175x1000	515
9	200	160	1620x1175x950	550
10	270	215	2320x1180x1070	785

Table1.1: Flow quantities, dimensions, weights

Note: All given weights apply for model 4 without oil filling.

1.3 Oil viscosity/oil grade

The oil viscosity and oil grade will be found in the Operating Instructions or on the nameplate of the gear unit.

1.4 Model code

The equipment of the oil system in accordance with the ordered model will be found in the following table (see also item 1.1.)

List of equipment		**corresp. Operating Instructions**	**Part no.**	**Model**			
				1	2	3	4
Base frame		–	1	■	■	■	■
Three-way cock, suction line	size 1 - 4	BA KRO.HAH.000 EN	7	■	■	■	■
	size 5 - 10	BA HER.HAH.000 EN		■	■	■	■
2 Pump groups, pressure relief valve		BA STE.PUM.005 EN	10,13	■	■	■	■
3-phase A.C. motor		LOHER N-R 430 EN		■	■	■	■
Double change-over filter	size 1 - 4	FLENDER B 5922 EN	20	■	■	■	■
	size 5 - 10	FLENDER B 5921 EN		■	■	■	■
Water-oil cooler		BA SER.KUE.001 EN	30	■	■	■	■
2 Non return valves		FLENDER B 5916 EN	35	■	■	■	■
Pressure gauge		FLENDER B 5914 EN	45	■	■	■	■
Pressure control 0.5 bar		FLENDER B 5925 EN	50	■	■	■	■
Pressure control 0.8 bar			55	■	■	■	■
Thermometer		FLENDER B 5924 EN	60	■	■	■	■
Temperature control		FLENDER B 5926 EN	70		■	■	■
Flow control		FLENDER B 5927 EN	80			■	■
Cooling water quantity regulator		BA HRI.REG.000 EN	500		■		■
Terminal box and wiring if ordered							

Table 1.2: Model code

1.5 List of equipment

In a separate list of equipment, all parts are listed in accordance with the ordered model including their technical data.

2. General notes

2.1 General

These operating instructions are part of the oil supply system supply. They should always be kept near the oil supply system.

Only a precise knowledge of these Operating Instructions guaranteee trouble-free operation of the oil supply system. It is therefore in the interest of the operator for the Operating Instructions to be read, understood and observed in all respects by the persons responsible for handling, installation and operation.

Note: We accept no liability for any damage or malfunction resulting from non-observance of the Operating Instructions.

The ”**FLENDER oil supply system**” dealt with in these Operating Instructions has been developed for stationary use in general engineering. Possible applications for gear units of this series are for example sewage plants, excavators, the chemical industry, iron and steel manufacture, conveyor systems, crane systems, the foodstuffs industry, paper machines, cableways, the cement industry, etc.

The oil supply system is only designed for the field of application as specified in Section 1. ”Technical data”. Operating conditions which differ from that stated will require fresh contractual agreements.

The oil supply system described here is in accordance with the state of the art at the time of these Operating Instructions going to print.

In the interest of further development, we reserve the right to introduce modifications to the individual subassemblies and accessories which, while retaining the essential features, can be regarded as desirable to increase their efficiency and safety.

The copyright of these Operating Instructions remains the property of **FLENDER AG.**

These Operating Instructions may not be duplicated in part or whole, utilized for the purpose of publicity or communicated to third parties without our express consent.

Please contact our works listed below in respect of all technical queries:

FLENDER AG
D 46393 Bocholt

Telefon: 02871/92-0
Telefax: 02871/92-2728

or one of our service branches which are listed in Section 11. ”Stocking spare parts, service facility addresses”.

3. Safety notes

3.1 Safety notes

- The oil supply system is constructed in accordance with the state of the art and is reliable in the condition as shipped. Unauthorized modifications which impair its reliability are NOT permissible. This also applies to guards which are fitted as protection against accidental contact.
- The oil supply system may only be used and operated within the scope of the conditions specified in the contract of performance and supply.
- The operator should ensure that the persons entrusted with installation, operation, care and maintenance, and repair have read, understood the Operating Instructions and observe them in all respects in order that:

  – Prevent hazard to life and limb of the user and third parties

  – Ensure the reliability of the oil supply system

and

  – Prevent failure and environmental pollution due to incorrect handling.

- The relevant regulations concerning industrial safety and pollution control should be observed during handling, installation, operation, and care and maintenance.
- The oil supply system may only be operated, serviced and repaired by authorized, trained and properly instructed personnel.
- Cleaning with a high-pressure cleaning device is not permissible.
- All work should be carried out with care with the safety aspect in mind.
- All work on the oil supply system may only be carried out when it is stationary.
  The drive units must be secured to prevent accidental startup (e.g. by locking the key switch or by removing the fuses in the power supply). A notice should be displayed at the switch-on point stating that work is in progress on the oil supply system.
- On the occasion of oil changes, the old oil should be collected in a suitable receptacle. Any pools of oil which have occurred should be removed at once with an oil binding agent.
  Very dirty and oil-soaked cleaning rags should be kept in suitable containers.
  The oil, the oil binding agent and the cleaning rags should be disposed of in accordance with the relevant pollution control requirements.
- The drive unit should be shut off at once if changes in the oil supply system are detected during operation, such as for example increased operating temperature or a change in system noises.
- Pipe fittings, flange connections and monitoring devices may not be loosened while the system is pressurised. Beforehand, the pumps must be switched off and pressurised assemblies must be relieved.
- Rotating parts, such as couplings, gear wheels or belt drives must be protected by means of suitable guards to prevent accidental contact.
- When mounting the oil supply system to devices and systems, the device or system manufacturer is obliged to add the instructions, notes and description contained in these Operating Instructions to his operating instructions.
- Notes affixed to oil supply system, such as for example rating plate, direction of rotation arrows, etc., must be observed. They must be kept free from paint and dirt. Missing plates must be replaced.

3.1.1 Notes and symbols in the operating instructions

Instructions in the Operating Instructions which concern operating safety are emphasized as follows:

⚠ This symbol draws attention to safety measures which MUST be observed to prevent **personal injury.**

Caution! This symbol draws attention to safety measures which MUST be observed in any case to prevent **damages to the oil supply system and the gear unit.**

Note: This note draws attention to general **operating notes** which should be specially observed.

4. Handling and storage

4.1 Scope of supply

The contents of the shipment are listed in the shipping documents. They should be checked for completeness on receipt. Any shipping damage and/or missing parts should be reported in writing at once.

4.2 Handling and storage

4.2.1 Handling

The oil supply system is shipped in assembled state. Ancillary equipment (as e.g. compensators, hoses, pipes and fittings) are shipped packed separately.

The packing of the oil supply system will differ, dependent on method of shipment and size. The packing, unless otherwise agreed contractually, complies with **HPE Packing Guidelines**.

The symbols shown on the packing should be noted. Their significance is as follows:

bild-transport

This way up	Fragile	Keep dry	Keep cool	Centre of gravity	Use no hand hook	Attach here

Caution!

When handling the oil supply system, exercise special care to avoid damage due to the use of false or careless loading and unloading.
Ropes or chains should be used for handling the oil supply system. These may only be attached to the marked transporting eyes on the base frame.
It must be ensured that the lifting ropes do not damage the fittings and pipes. Therefore, a crosshead is required for protection. The rope length must be chosen in a way, that the base frame is suspended horizontally.

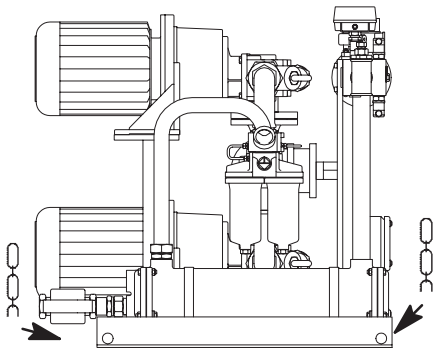

Detailed illustrations of the oil supply system will be found in the drawings in the oil supply system documentation.

4.3 Storage

When the shipping packing is removed, the oil supply system must be stored on site in a clean, dry area. The oil supply system is to be properly covered to prevent penetration of dust and moisture.

It must be ensured that temperature fluctuations in the place of storage do not lead to condensation forming in the oil supply system.

It is NOT permissible to stack oil supply systems on top of one another.

It must be ensured that no external damage can occur!

The openings must be closed with plugs or polyethylene flange covers.

The preservation is adequate for normal shipping conditions and a period of 24 months until startup takes place (storage in dry rooms).

If storage is to exceed 24 months, it is essential to consult FLENDER.

The external coating is resistant to weak acids and alkalis, oils and solvents. It is seawater-resistant, tropic-proof and heat resistant up to 140 °C / 284 °F.

5. Technical description

5.1 General

The oil supply system described below is used for oil cooling and/or lubrication of a gear unit (see Section 1. ”Technical Data”).

The oil supply system was submit to a comprehensive test run and was checked in accordance with the ordering data.

- The oil supply is ensured by means of two pump assemblies, one of which acts as a standby pump.
- The pump draws the oil via a suction line from the pump sump of the gear unit.
- A filter is provided in the oil circuit for filtration of the circulating oil.
- The quantity of heat generated by losses, which is not dissipatable by convection, is dissipated by means of a cooler.
- Filtered and recooled oil is then passed back to the gear unit via a pressure line.
- The modules described above are mounted on the base frame of the oil supply system.

Note: Control notes will be found in section 8. ”Operation”.

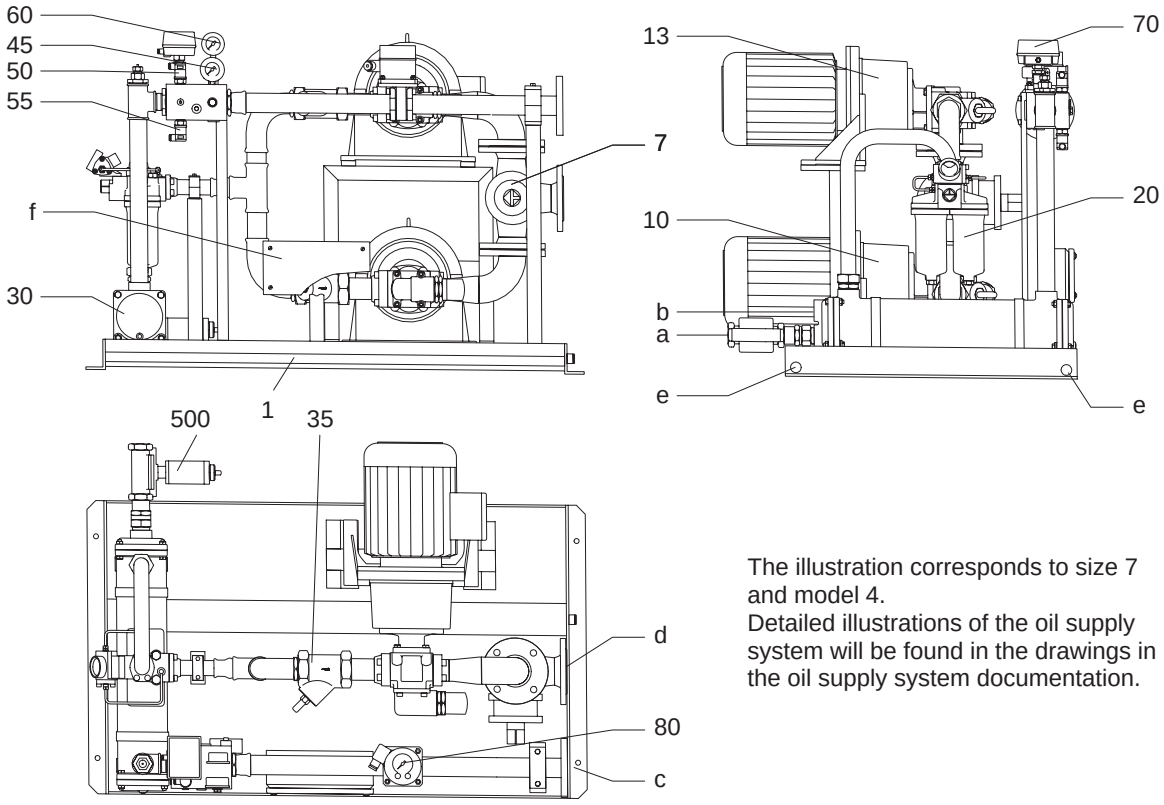

The illustration corresponds to size 7 and model 4.
Detailed illustrations of the oil supply system will be found in the drawings in the oil supply system documentation.

1	Base frame	60	Thermometer
7	Three-way cock	70	Temperature control
10	Pump group, pressure relief valve	80	Flow control
13	Pump group, pressure relief valve	500	Cooling water quantity regulator
20	Double change-over filter	a	Cooling water inlet
30	Water-oil cooler	b	Cooling water outlet
35	Non return valve	c	Pressure connection
45	Pressure gauge	d	Suction connection
50	Pressure control 0.5 bar	e	Transporting eyes
55	Pressure control 0.8 bar	f	Terminal box (only if ordered)

6. Assembly

6.1 General

We earnestly recommend having installation of the oil supply system carried out by FLENDER personnel. No liability is accepted for damage incurred as a result of improper execution by third parties.

6.2 Installation conditions

When planning space layout (e.g. planning carried out by customer), ensure that there is sufficient space around the oil supply system to permit unimpeded assembly and repair work. Machines installed upstream and downstream of the oil supply system should be located accordingly.

The load carrying capacity of hoists to be installed and used must at least be adequate for the data of the oil supply system; see Section 1. ”Technical Data”.

Installation of the oil supply system must be carried out on a level, firm and rigid foundation. Ensure that the oil can be drained off and that there is sufficient air supply for the motors. The valves and wearing parts must be readily accessible and permit easy inspection.

The permissible deviation of the installation surface of the oil supply system from the horizontal is 2 mm/1 m (0.08”/40”); if necessary, shims should be used.

6.3 Installation

For handling of the oil supply system, see Section 4. ”Handling and Storage”.

Packing and shipping protection devices should be removed before installation. Carry out a visual check for shipping damage and contamination. In the case of shipping damage, see Section 4. ”Handling and Storage”.

All preserved flange surfaces should be cleaned with a solvent, e.g. benzine.

Observe environment protection requirements.

If connecting pipes are not included in the scope of supply, pipes made from ST 35.4 in accordance with DIN 2391 (hydraulic pipe, quality grade C) should be used which are treated by normalizing bright annealing (NBK) and drawn finlessly.

The interfaces are provided with suitable flanges or screw unions.

Compensators should be used for vibration insulation and to compensate for linear expansion.

Customer supplied pipe fastenings (plastic clips) should be used for pipe connection. The distance between 2 clips must be less than 2 m / 78.7”.

Ensure that the pipes are not stressed.

After pipe installation, the lines should be flushed through. Welded pipes should be pickled.

Electrical connections of motors and monitors should be carried out in accordance with terminal drawings, equipment lists and specifications. Check voltage and circuits.

The plugs and flange covers should be removed and the fittings must be installed in the system in accordance with the lubrication diagram and the drawings (see Section 1. ”Technical Data”).

Parts supplied loose with threaded connection should be sealed with Loctite 128068 after thorough cleaning.

6.4 Final operations

After installing the oil supply system, all visible screw fastenings should be checked for tightness and tightened if necessary.

Fit all safety devices necessary !

7. Startup

7.1 Filling with oil

The following provisions are recommendations based on long years of experience. They are given however without any responsibility on the part of the gear unit manufacturer. Responsibility for the oil grade lies with the manufacturer of the oil and the operator of the system has to ensure satis factory state of the oil grade (see Operating Instructions ”Gear unit”).

In all cases, before startup, the gear unit/oil supply system should be filled with oil (see Operating Instructions ”Gear unit”). After filling, the filler openings should be properly reclosed and sealed.

Only oils in accordance with the specification should be used (see Operating Instructions ”Gear unit”). Mixing oils of different manufacturers is NOT permissible.

To remove residues of preservatives which can lead to oil foaming, the oil supply system together with the gear unit should be flushed before startup (see Operating Instructions ”Gear unit”).

The oil must then be drained carefully from the oil supply system, the monitors and the oil compartment in the gear unit while it is hot. It may only be reused as flushing oil. If the flushing oil is to be used in another system, it should first be carefully purified.

⚠ **There is a risk of scalding from the hot oil emerging.**
Wear protective gloves.

Caution! **Any oil leaking out must immediately be removed with an oil binding agent.**

Fresh oil in accordance with the specification should be used for startup (see Operating Instructions ”Gear unit”).

Fill the oil supply system with oil in accordance with the Operating Instructions ”Gear unit” via the gear unit resp. the oil container. Filling can be carried out with an auxiliary oil pump. Ensure that no dirt is allowed to enter the oil circuit.

Fill until the specified oil level is reached on the oil level gauge with the pump stationary (see Operating Instructions ”Gear unit”). The pump should then be started.

Before initial startup of the gear unit, the oil supply system must be run for at least 15 minutes to allow all oil compartments to fill up (see Operating Instructions ”Gear unit”). Stop the oil supply system again after wards and correct the oil level if necessary.

All pipes, screw unions and flanges should be tightened, this applying particularly to suction lines (to prevent air being drawn into the system). Leaks should be resealed.

7.2 Pump

Caution! **Low-pressure oil pumps are only permissible for one direction of rotation. The direction of rotation of motors must agree with the direction of rotation arrow on the pump.**

For the pump, the special operating instructions of the manufacturer must be observed.

7.3 Oil cooler

The water supply connections for the oil cooler should be established by the customer/operator.

If there is risk of frost and the oil supply system will be out of service for any considerable time, the cooling water should be drained off.

For the oil cooler, the special operating instructions of the manufacturer must be observed.

7.4 Startup

Before starting up the oil supply system, check that the requirements in accordance with these Operating Instructions and the requirements in accordance with the gear unit Operating Instructions have been fulfilled.

Caution!

Before startup, filling with oil must be carried out.
Before startup, check the cooling water circuit!
Stop valves are to be secured to prevent accidental closure.

Before startup and after repairs and maintenance work, the oil supply system is to be cleaned thoroughly to remove any impurities. This applies particularly to water (e.g. rain water and leakage of the cooler) in order to prevent mixture of water and oil.

All pumps, filters and coolers must be suitably bled.

⚠ **The works setting of the pressure relief valves/safety valves carried out by us at our works may NOT be altered, as it is not used to regulate the pressure and rate of flow. It is intended ONLY as overload protection!**

8. Operation

8.1 Control notes

The part numbers (...) given in the following text have been taken from the enclosed assembly drawing and the lubrication diagram.

Type, size and model of the oil supply system will be found on the nameplate of the oil system (see section 1.”Technical Data”).

List of equipment		corresp. Operating Instructions	Part no.	Model 1	2	3	4
Base frame		–	1	■	■	■	■
Three-way cock, suction line	size 1 - 4	BA KRO.HAH.000 EN	7	■	■	■	■
	size 5 - 10	BA HER.HAH.000 EN		■	■	■	■
2 Pump groups, pressure relief valve		BA STE.PUM.000 EN	10,13	■	■	■	■
3-phase A.C. motor		LOHER N-R 435 EN		■	■	■	■
Double change-over filter	size 1 - 4	FLENDER B 5922 EN	20	■	■	■	■
	size 5 - 10	FLENDER B 5921 EN		■	■	■	■
Water-oil cooler		BA SER.KUE.001 EN	30	■	■	■	■
2 Non return valves		FLENDER B 5916 EN	35	■	■	■	■
Pressure gauge		FLENDER B 5914 EN	45	■	■	■	■
Pressure control 0.5 bar		FLENDER B 5925 EN	50	■	■	■	■
Pressure control 0.8 bar			55	■	■	■	■
Thermometer		FLENDER B 5924 EN	60	■	■	■	■
Temperature control		FLENDER B 5926 EN	70		■	■	■
Flow control		FLENDER B 5927 EN	80			■	■
Cooling water quantity regulator		BA HRI.REG.000 EN	500		■		■
Terminal box and wiring if ordered							

Table 8.1: Model code

According to the model used, the oil system is instrumented in accordance with the model code:

Lubrication diagram

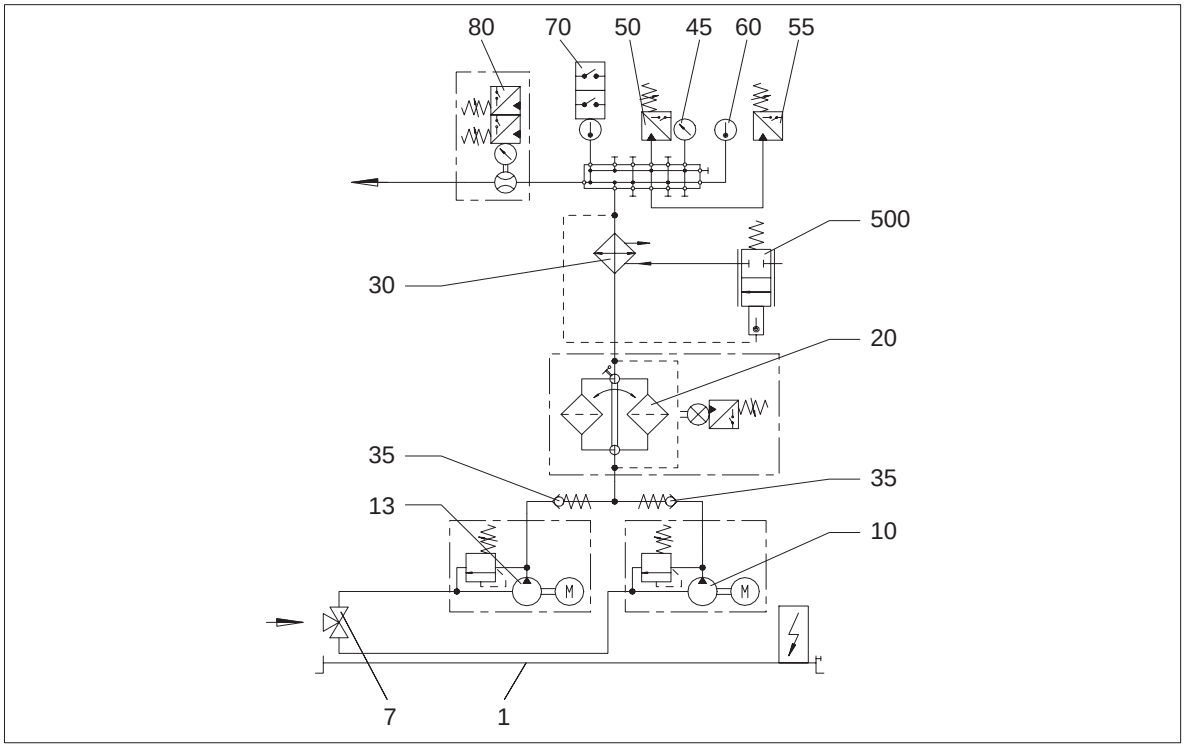

The following control notes must be considered for the individual components:

Note: In addition to these control notes, the specifications in the enclosed list of equipment must be observed in any case.

8.1.1 Three-way cock

On the suction side a three-way cock (7) has been arranged. When a pump is replaced this cock serves for closing the suction line to that pump, with the stand-by pump being in operation at the same time. During normal operation the cock has to be set so that the suction lines to both pumps are open.

8.1.2 Pumps

During operation of the pumps (10, 13), the system pressure is limited by means of a pressure relief valve, set to 8 bar, integrated in the pump.

Caution! **The factory adjustment of this valve may not be changed!**

8.1.3 Filter

Monitoring of the filter (20) is effected visually by means of a differential pressure indicator and electrically by means of a differential pressure control.

At Δ p > 2 bar ⇒ **WARNING** (Clean filter)

8.1.4 Pressure gauge

The oil pressure is indicated visually by means of a pressure gauge (45).

8.1.5 Pressure control

The pressure control of the oil supply system is effected by the means of the pressure controls (50, 55).

Oil pressure (50) p < 0.5 bar ⇒ **STOP**

Oil pressure (55) p < 0.8 bar ⇒ **WARNING** (STAND-BY PUMP ON)

8.1.6 Thermometer

The oil temperature is indicated visually by means of a thermometer (60).

8.1.7 Temperature control

Temperature monitoring of the system is effected by means of a temperature control (70).

At T > 75 °C ⇒ **WARNING**

At T > 80 °C ⇒ **STOP**

8.1.8 Flow control

The oil flow quantity is monitored by means of the flow control (80).

At oil flow rate < 80 % of pump delivery ⇒ **WARNING**

At oil flow rate < 70 % of pump delivery ⇒ **STOP**

8.1.9 Cooling water quantity regulator

The control of the water circuit is effected by means of a temperature controlled cooling water quantity regulator (500) the sensor of which is fixed by screws behind the cooler in the oil circuit.

8.1.10 General

The gear unit must be supplied alternately (interval 8 hrs) by pump 1 and pump 2.

The pump which is not in operation will in each case act as a stand-by pump.

For the pressure controls and the flow control delayed timing of 10 seconds should be provided.

After switching of the main drive, the oil supply system must run until the drive has come to a complete standstill.

8.2 Interlocking instructions

8.2.1 Pump enable

PUMP ENABLE takes place when the following conditions are fulfilled:

Oil temperature (70)	< 75 °C

8.2.2 Gear unit enable

GEAR UNIT ENABLE takes place when the following conditions are fulfilled:

Oil flow rate (80)	> 80 % of pump delivery
Oil pressure (55)	> 0.8 bar
Oil temperature (70)	< 75 °C
Filter differential pressure (20)	< 2 bar

Runup time of oil supply system at least 2 minutes (in the case of circulating oil lubrication).

8.2.3 Warning

WARNING takes place when one of the following conditions is fulfilled:

Oil flow rate (80)	< 80 % of pump delivery
Oil pressure (55)	< 0.8 bar
	⇒ STAND-BY PUMP ON
Oil temperature (70)	> 75 °C
Filter differential pressure (20)	> 2 bar after a period of 30 seconds

8.2.4 Gear unit stop

GEAR UNIT STOP takes place when one of the following conditions is fulfilled:

Oil flow rate (80)	< 70 % of pump delivery
Oil pressure (50)	< 0.5 bar
Oil temperature (70)	> 80 °C

If the oil temperature (70) is more than 80 °C during **GEAR UNIT STOP**, the pump must be left turned on until the oil temperature has decreased to a value < 75 °C.

8.3 Response to malfunctions

Irrespective of the following notes, the local safety requirements will apply in all cases for operation of the oil supply system.

Supervision during operation should on no account be dispensed with to recognize any malfunctions occurring (see Section 9. ”Disturbances, reasons and remedy”) and thus to implement preventive measures. The operating pressures and oil temperatures should be recorded on a regular basis.

If irregularities at variance from the normal state are noticed during operation, or if the operating data change, it is essential that the cause be located immediately. If necessary, shut the system off. If the causes cannot be located, even with the aid of the Troubleshooting List, inform FLENDER at once (see Section 11. ”Stocking spare parts, service facility addresses”).

We URGENTLY recommend to provide a lockable emergency switch to ensure that the system is secured to prevent accidental switch-on during maintenance, repairs, or malfunctions. In addition, we would draw attention to the relevant accident prevention rules on site!

For restart after malfunction, the notes in Section 7. ”Startup” should be noted.

8.4 Shutdown

For prolonged periods out of service on the part of gear unit and oil supply system, the following measures are necessary:

a) Gear unit and oil supply system should remain filled with oil. Every 4 weeks, gear unit and oil supply system must be run for 1 hour. The necessary prelubrication and lubrication times should be observed.

b) If the measures listed under a) are not possible, the gear unit and the oil supply system must be preserved.

Recommended conservation agent:

Preservation time up to 24 months: Castrol Alpha SP 220 S

In case of storage times of more than 24 months, the oil supply system must be preserved again.

Preservation time up to 36 months: Special anti-corrosion oil TRIBOL 1390 when using PG base synthetic oil.

If there is risk of frost and the oil supply system will be out of service for any considerable time, the cooling water should be drained off.

For periods out of service exceeding 36 months, it is ESSENTIAL to consult FLENDER (see also Operating Instructions ”Gear unit”).

9. Disturbances, reasons and remedy

9.1 General

Note: The malfunctions listed below are only intended as points of reference for troubleshooting. With such a complex system, all other modules must always be included in troubleshooting. If the cause of the malfunction is not clear, we recommend therefore that the specialist personnel of FLENDER be consulted in tracing possible causes.

9.2 Possible malfunctions

Malfunctions	Causes	Remedy
Oil temperature too high	No cooling water Too little cooling water Cooling water too hot	Rectify cooling water supply Increase cooling water supply
	Cooler contains air	Bleed cooler
	Cooler dirty	Pull bank of pipes and cooler and clean the bank of pipes or replace by a new bank of pipes. See seperate operating instructions.
Oil temperature too low	Gear unit not yet warmed up to operating temperature	Wait
	Too much cooling water Cooling water too cold	Reduce cooling water supply
Oil pressure too low	Filter clogged	Switch over to clean filter and clean or replace filter and filter element. See seperate operating instructions.
	Pressure relief valve wrongly set	Consult the FLENDER.
	Pressure relief valve defective	Repair or replace pressure relief valve. See seperate operating instructions.
	Suction line blocked	Clean suction line
	Pump aspirating air	Check suction line, remedy any leaks
	Oil temperature too high	as above
	Oil viscosity too low	Check the oil viscosity and fill in the correct oil, if necessary.
	Pump defective Pump drive defective	Switch over to standby pump, repair or replace defective pump. See seperate operating instructions.
Oil pressure too high	Gear unit not yet warmed up to operating temperature	Wait
	Pressure relief valve wrongly set	Consult the FLENDER.
	Pressure relief valve defective	Repair or replace pressure relief valve. See seperate operating instructions.
	Oil pipes to and at the gear unit blocked	Locate blocked pipe and clean
	Oil viscosity too high	Check the oil viscosity and fill in the correct oil, if necessary.

Malfunctions	Causes	Remedy
Clearly apparent or accumulated filter residues	Pipes dirty (scale, welding residues)	Clean pipes
	Abraded particels from gear unit	Check gear unit (bearings, tooth systems, alignment) and rectify defects
	Oil dirty	Carry out oil change
	Abraded particels from defective pump	Switch over to standby pump, repair or replace defective pump. See seperate operating instructions.
Oil consumption too high	Leak in pipes, connections, valves or gear unit	Tighten screws. Reseal
	Shaft outlets on gear unit leaking	Renew seal rings
	Cooler leaking	Seal cooler or renew cooler element. See seperate operating instructions.
	Filter leaking	Seal filter

Table 9.2: Information on malfunktions

10. Maintenance and repair

10.1 Safety

During maintenance and inspection, Section 3. ”Safety” and Section 8. ”Operation” should be observed.

10.2 Oils

The oil grades as well as the required all change intervals will be found in the Operating Instructions ”Gear Unit” section 10.

10.3 Oil pump

For the pumps, the special operating instructions of our subcontractor should be observed.

10.4 Filter

For filters, the special operating instructions of our subcontractor should be observed.

10.5 Oil cooler

For oil coolers, the special operating instructions of our subcontractor should be observed.

10.6 Preservation

See Section 8. ”Operation”.

11. Spare parts stock, service facility addresses

11.1 Spare parts stock

Maintaining a stock of the most essential replacement and wearing parts on site will ensure that the oil supply system is serviceable at all times.

When ordering spare parts, please use the list of equipment.

Further information will be found in the drawings listed in the list of equipment.

We assume warranty only for original spare parts supplied by us.

Caution! **We would expressly draw attention to the fact that spare parts and accessories not supplied by us have not been tested or approved by us either. Fitting and/or use of such products can therefore under certain circumstances adversely affect structurally specified properties of the oil supply system and will thus impair active and/or passive safety. No form of reliability or warranty will be assumed by FLENDER for damage occasioned by the use of non-original spare parts and accessories.**

Please note that production and supply specifications frequently exist for components and we will always offer spare parts in accordance with the state of the art and in accordance with the latest legal requirements.

When ordering spare parts, the following data should be stated:

Order No. Part No. Quantity

11.2 Service facility addresses

When ordering spare parts or requesting a service fitter, please contact FLENDER AG first of all.

FLENDER Germany

A. FRIEDR. FLENDER AG
46393 Bocholt - Tel.: (0 28 71) 92-0 - Fax: (0 28 71) 92 25 96
E-mail: contact@flender.com • www.flender.com
Shipping address: Alfred - Flender - Strasse 77 - 46395 Bocholt

A. FRIEDR. FLENDER AG - Kupplungswerk Mussum
Industriepark Bocholt - Schlavenhorst 100 - 46395 Bocholt - Tel.: (0 28 71) 92 28 68 - Fax: (0 28 71) 92 25 79
E-mail: couplings@flender.com • www.flender.com

A. FRIEDR. FLENDER AG - Werk Friedrichsfeld
Am Industriepark 2 - 46562 Voerde - Tel.: (0 28 71) 92-0 - Fax: (0 28 71) 92 25 96
E-mail: contact@flender.com • www.flender.com

A. FRIEDR. FLENDER AG - Getriebewerk Penig
Thierbacher Strasse 24 - 09322 Penig - Tel.: (03 73 81) 60 - Fax: (03 73 81) 8 02 86
E-mail: ute.tappert@flender.com • www.flender.com

FLENDER - TÜBINGEN GMBH
72007 Tübingen - Tel.: (0 70 71) 7 07-0 - Fax: (0 70 71) 70 74 00
E-mail: sales-motox@flender-motox.com • www.flender.com
Shipping address: Bahnhofstrasse 40 - 72072 Tübingen

LOHER GMBH
94095 Ruhstorf - Tel.: (0 85 31) 3 90 - Fax: (0 85 31) 3 94 37
E-mail: info@loher.de • www.loher.de
Shipping address: Hans-Loher-Strasse 32 - 94099 Ruhstorf

FLENDER SERVICE GMBH
44607 Herne - Tel.: (0 23 23) 940-0 - Fax: (0 23 23) 940 333
E-mail: infos@flender-service.com • www.flender-service.com
24h Service Hotline +49 (0) 17 22 81 01 00
Shipping address: Südstrasse 111 - 44625 Herne

A. FRIEDR. FLENDER AG - FLENDER GUSS
Obere Hauptstrasse 228-230 - 09228 Chemnitz / Wittgensdorf - Tel.: (0 37 22) 64-0 - Fax: (0 37 22) 64 21 89
E-mail: flender.guss@flender-guss.com • www.flender-guss.de

Germany

A. FRIEDR. FLENDER AG
46393 BOCHOLT - TEL.: (0 28 71) 92 - 0 - FAX: (0 28 71) 92 25 96
SHIPPING ADDRESS: ALFRED - FLENDER - STRASSE 77 - 46395 BOCHOLT

E-mail: contact@flender.com • www.flender.com

VERTRIEBSZENTRUM BOCHOLT
46393 Bocholt
Alfred-Flender-Strasse 77, 46395 Bocholt
Tel.: (0 28 71) 92 - 0
Fax: (0 28 71) 92 - 14 35
E-mail: vz.bocholt@flender.com

VERTRIEBSZENTRUM STUTTGART
70472 Stuttgart
Friolzheimer Strasse 3, 70499 Stuttgart
Tel.: (07 11) 7 80 54 - 51
Fax: (07 11) 7 80 54 - 50
E-mail: vz.stuttgart@flender.com

VERTRIEBSZENTRUM MÜNCHEN
85750 Karlsfeld
Liebigstrasse 14, 85757 Karlsfeld
Tel.: (0 81 31) 90 03 - 0
Fax: (0 81 31) 90 03 - 33
E-mail: vz.muenchen@flender.com

VERTRIEBSZENTRUM BERLIN
Schlossallee 8, 13156 Berlin
Tel.: (0 30) 91 42 50 58
Fax: (0 30) 47 48 79 30
E-mail: vz.berlin@flender.com

FLENDER International

(2003-12-01)

E U R O P E

AUSTRIA
Flender Ges.m.b.H.
Industriezentrum Nö-Süd
Strasse 4, Objekt 14, Postfach 132
2355 Wiener Neudorf
Phone: +43 (0) 22 36 6 45 70
Fax: +43 (0) 22 36 6 45 70 10
E-mail: office@flender.at
www.flender.at

BELGIUM & LUXEMBOURG
N.V. Flender Belge S.A.
Cyriel Buyssestraat 130
1800 Vilvoorde
Phone: +32 (0) 2 - 2 53 10 30
Fax: +32 (0) 2 - 2 53 09 66
E-mail: sales@flender.be

BULGARIA
A. Friedr. Flender AG
Branch Office
c/o Auto - Profi GmbH
Alabin Str. 52, 1000 Sofia
Phone: +359 (0) 2 - 9 80 66 06
Fax: +359 (0) 2 - 9 80 33 01
E-mail: sofia@auto-profi.com

CROATIA / SLOVENIA
BOSNIA-HERZEGOVINA
A. Friedr. Flender AG
Branch Office
c/o HUM - Naklada d.o.o.
Mandroviceva 3, 10000 Zagreb
Phone: +385 (0) 1 - 2 30 60 25
Fax: +385 (0) 1 - 2 30 60 24
E-mail: flender@hi.hinet.hr

CZECH REPUBLIC
A. Friedr. Flender AG
Branch Office
Hotel DUO, Teplicka 17
19000 Praha 9
Phone: +420 (0) 2 - 83 88 23 00
Fax: +420 (0) 2 - 83 88 22 05
E-mail: flender_pumprla@hotelduo.cz

DENMARK
Flender Scandinavia A/S
Rugmarken 35 B, 3520 Farum
Phone: +45 - 70 22 60 03
Fax: +45 - 44 99 16 62
E-mail: kontakt@flenderscandinavia.com
www.flenderscandinavia.com

ESTHONIA / LATVIA / LITHUANIA
Flender Branch Office
Addinol Mineralöl Marketing OÜ
Suur-Söjamäe 32
11415 Tallinn / Esthonia
Phone: +372 (0) 6 - 27 99 99
Fax: +372 (0) 6 - 27 99 90
E-mail: flender@addinol.ee
www.addinol.ee

FINLAND
Flender Oy
Ruosilantie 2 B, 00390 Helsinki
Phone: +358 (0) 9 - 4 77 84 10
Fax: +358 (0) 9 - 4 36 14 10
E-mail: webmaster@flender.fi
www.flender.fi

FRANCE
Flender s.a.r.l.
3, rue Jean Monnet - B.P. 5
78996 Elancourt Cedex
Phone: +33 (0) 1 - 30 66 39 00
Fax: +33 (0) 1 - 30 66 35 13
E-mail: sales@flender.fr

SALES OFFICES:
Flender s.a.r.l.
36, rue Jean Broquin
69006 Lyon
Phone: +33 (0) 4 - 72 83 95 20
Fax: +33 (0) 4 - 72 83 95 39
E-mail: sales@flender.fr

Flender - Graffenstaden SA
1, rue du Vieux Moulin
67400 Illkirch-Graffenstaden
B.P. 84
67402 Illkirch - Graffenstaden
Phone: +33 (0) 3 - 88 67 60 00
Fax: +33 (0) 3 - 88 67 06 17
E-mail: flencomm@flender-graff.com

GREECE
Flender Hellas Ltd.
2, Delfon str., 11146 Athens
Phone: +30 210 - 2 91 72 80
Fax: +30 210 - 2 91 71 02
E-mail: flender@otenet.gr

Mangrinox S.A.
14, Grevenon str., 11855 Athens
Phone: +30 210 - 3 42 32 01
Fax: +30 210 - 3 45 99 28
E-mail: mangrinox@otenet.gr

HUNGARY
A. Friedr. Flender AG
Branch Office
Bécsi Út 3-5, 1023 Budapest
Phone: +36 (0) 1 - 3 45 07 90 / 91
Fax: +36 (0) 1 - 3 45 07 92
E-mail: jambor.laszlo@axelero.hu

ITALY
Flender Cigala S.p.A.
Parco Tecnologico Manzoni
Palazzina G
Viale delle industrie, 17
20040 Caponago (MI)
Phone: +39 (0) 02 - 95 96 31
Fax: +39 (0) 02 -95 74 39 30
E-mail: info@flendercigala.it

THE NETHERLANDS
Flender Nederland B.V.
Industrieterrein Lansinghage
Platinastraat 133
2718 ST Zoetermeer
Postbus 725
2700 AS Zoetermeer
Phone: +31 (0) 79 - 3 61 54 70
Fax: +31 (0) 79 - 3 61 54 69
E-mail: sales@flender.nl
www.flender.nl

SALES OFFICES:
Flender Nederland B.V.
Lage Brink 5-7
7317 BD Apeldoorn
Postbus 1073
7301 BH Apeldoorn
Phone: +31 (0) 55 - 5 27 50 00
Fax: +31 (0) 55 - 5 21 80 11
E-mail: tom.alberts@flender-group.com

Bruinhof B.V.
Boterdiep 37
3077 AW Rotterdam
Postbus 9607
3007 AP Rotterdam
Phone: +31 (0) 10 - 4 97 08 08
Fax: +31 (0) 10 - 4 82 43 50
E-mail: info@bruinhof.nl
www.bruinhof.nl

NORWAY
Elektroprosess AS
Frysjaveien 40, 0884 Oslo
Postboks 165, Kjelsås
0411 Oslo
Phone: +47 (0) 2 - 2 02 10 30
Fax: +47 (0) 2 - 2 02 10 50 / 51
E-mail: post@elektroprosess.no

POLAND
A. Friedr. Flender AG
Branch Office
Przedstawicielstwo w Polsce
ul. Wyzwolenia 27
43 - 190 Mikolów
Phone: +48 (0) 32 - 2 26 45 61
Fax: +48 (0) 32 - 2 26 45 62
E-mail: flender@pro.onet.pl
www.flender.pl

PORTUGAL
Rodamientos FEYC, S.A
R. Jaime Lopes Dias, 1668 CV
1750 - 124 Lissabon
Phone: +351 (0) 21 - 7 54 24 10
Fax: +351 (0) 21 - 7 54 24 19
E-mail: info@rfportugal.com

ROMANIA
A. Friedr. Flender AG
Branch Office
98 - 106, Soseaua Mihai Bravu
Sector 2, Bloc D 16, Sc 1, Apartament 4
021331 Bucuresti - 2
Phone: +40 (0) 21 - 4 91 10 08
Fax: +40 (0) 21 - 4 91 10 08
E-mail: flender@fx.ro

RUSSIA
F & F GmbH
Tjuschina 4-6
191119 St. Petersburg
Phone: +7 (0) 8 12 - 3 20 90 34
Fax: +7 (0) 8 12 - 3 40 27 60
E-mail: flendergus@mail.spbnit.ru

SLOVAKIA
A. Friedr. Flender AG
Branch Office
Vajanského 49
P.O. Box 286, 08001 Presov
Phone: +421 (0) 51 - 7 70 32 67
Fax: +421 (0) 51 - 7 70 32 67
E-mail: micenko.flender@nextra.sk

SPAIN
Flender Ibérica S.A.
Poligono Industrial San Marcos
Calle Morse, 31 (Parcela D-15)
28906 Getafe - Madrid
Phone: +34 (0) 91 - 6 83 61 86
Fax: +34 (0) 91 - 6 83 46 50
E-mail: f-iberica@flender.es
www.flender.es

SWEDEN
Flender Scandinavia
Äsenvägen 2
44339 Lerum
Phone: +46 (0) 302 - 1 25 90
Fax: +46 (0) 302 - 1 25 56
E-mail: kontakt@flenderscandinavia.com
www.flenderscandinavia.com

SWITZERLAND
Flender AG
Zeughausstr. 48
5600 Lenzburg
Phone: +41 (0) 62 8 85 76 00
Fax: +41 (0) 62 8 85 76 76
E-mail: info@flender.ch
www.flender.ch

TURKEY
Flender Güc Aktarma Sistemleri
Sanayi ve Ticaret Ltd. Sti.
IMES Sanayi, Sitesi
E Blok 502. Sokak No. 22
81260 Dudullu - Istanbul
Phone: +90 (0) 2 16 - 4 66 51 41
Fax: +90 (0) 2 16 3 64 59 13
E-mail: cuzkan@flendertr.com
www.flendertr.com

UKRAINE
A. Friedr. Flender AG
Branch Office, c/o DIV - Deutsche Industrie-
vertretung, Prospect Pobedy 44
252057 Kiev
Phone: +380 (0) 44 - 4 46 80 49
Fax: +380 (0) 44 - 2 30 29 30
E-mail: flender@div.kiev.ua

UNITED KINGDOM & EIRE
Flender Power Transmission Ltd.
Thornbury Works, Leeds Road
Bradford
West Yorkshire BD3 7EB
Phone: +44 (0) 12 74 65 77 00
Fax: +44 (0) 12 74 66 98 36
E-mail: flenders@flender-power.co.uk
www.flender-power.co.uk

SERBIA-MONTENEGRO
ALBANIA / MACEDONIA
A. Friedr. Flender AG
Branch Office
c/o G.P.Inzenjering d.o.o.
III Bulevar 54 / 19
11070 Novi Beograd
Phone: +381 (0) 11 - 60 44 73
Fax: +381 (0) 11 - 3 11 67 91
E-mail: flender@eunet.yu

A F R I C A

NORTH AFRICAN COUNTRIES
Please refer to Flender s.a.r.l.
3, rue Jean Monnet - B.P. 5
78996 Elancourt Cedex
Phone: +33 (0) 1 - 30 66 39 00
Fax: +33 (0) 1 - 30 66 35 13
E-mail: sales@flender.fr

EGYPT
Sons of Farid Hassanen
81 Matbaa Ahlia Street
Boulac 11221, Cairo
Phone: +20 (0) 2 - 5 75 15 44
Fax: +20 (0) 2 - 5 75 17 02
E-mail: hussein@sonfarid.com

SOUTH AFRICA
Flender Power Transmission (Pty.) Ltd.
Cnr. Furnace St & Quality Rd.
P.O. Box 131, Isando 1600
Johannesburg
Phone: +27 (0) 11 - 5 71 20 00
Fax: +27 (0) 11 - 3 92 24 34
E-mail: sales@flender.co.za
www.flender.co.za

SALES OFFICES:
Flender Power Transmission (Pty.) Ltd.
Unit 3 Marconi Park
9 Marconi Crescent, Montague Gardens
P.O. Box 37291
Chempet 7442, Cape Town
Phone: +27 (0) 21 - 5 51 50 03
Fax: +27 (0) 21 - 5 52 38 24
E-mail: sales@flender.co.za

Flender Power Transmission (Pty.) Ltd.
Unit 3 Goshawk Park
Falcon Industrial Estate
P.O. Box 1608
New Germany 3620, Durban
Phone: +27 (0) 31 - 7 05 38 92
Fax: +27 (0) 31 - 7 05 38 72
E-mail: sales@flender.co.za

Flender Power Transmission (Pty.) Ltd.
9 Industrial Crescent, Ext. 25
P.O. Box 17609, Witbank 1035
Phone: +27 (0) 13 - 6 92 34 38
Fax: +27 (0) 13 - 6 92 34 52
E-mail: sales@flender.co.za

Flender Power Transmission (Pty.) Ltd.
Unit 14 King Fisher Park, Alton
Cnr. Ceramic Curve & Alumina Allee
P.O. Box 101995
Meerensee 3901, Richards Bay
Phone: +27 (0) 35 - 7 51 15 63
Fax: +27 (0) 35 - 7 51 15 64
E-mail: sales@flender.co.za

A M E R I C A

ARGENTINA
Chilicote S.A.
Avda. Julio A. Roca 546
C 1067 ABN Buenos Aires
Phone: +54 (0) 11 - 43 31 66 10
Fax: +54 (0) 11 - 43 31 42 78
E-mail: chilicote@chilicote.com.ar

BRASIL
Flender Brasil Ltda.
Rua Quatorze, 60 - Cidade Industrial
32211 - 970, Contagem - MG
Phone: +55 (0) 31 - 33 69 21 00
Fax: +55 (0) 31 - 33 69 21 66
E-mail: vendas@flenderbrasil.com

SALES OFFICES:
Flender Brasil Ltda.
Rua James Watt, 142
conj. 142 - Brooklin Novo
04576 - 050, São Paulo - SP
Phone: +55 (0) 11 - 55 05 99 33
Fax: +55 (0) 11 - 55 05 30 10
E-mail: flesao@uol.com.br

Flender Brasil Ltda.
Rua Campos Salles, 1095
sala 04 - Centro 14015 - 110,
Ribeirão Preto - SP
Phone: +55 (0) 16 - 6 35 15 90
Fax: +55 (0) 16 - 6 35 11 05
E-mail: flender.ribpreto@uol.com.br

CANADA
Flender Power Transmission Inc.
215 Shields Court, Units 4 - 6
Markham, Ontario L3R 8V2
Phone: +1 (0) 9 05 - 3 05 10 21
Fax: +1 (0) 9 05 - 3 05 10 23
E-mail: flender@ca.inter.net
www.flenderpti.com

SALES OFFICE:
Flender Power Transmission Inc.
34992 Bemina Court
Abbotsford - Vancouver
B.C. V3G 1C2
Phone: +1 (0) 6 04 - 8 59 66 75
Fax: +1 (0) 6 04 - 8 59 68 78
E-mail: tvickers@rapidnet.net

CHILE / ARGENTINA / BOLIVIA
ECUADOR / PARAGUAY / URUGUAY
Flender Cono Sur Limitada
Avda. Galvarino Gallardo 1534
Providencia, Santiago
Phone: +56 (0) 2 - 2 35 32 49
Fax: +56 (0) 2 - 2 64 20 25
E-mail: flender@flender.cl
www.flender.cl

COLOMBIA
A.G.P. Representaciones Ltda.
Flender Liaison Office Colombia
Av Boyaca No 23A
50 Bodega UA 7-1, Bogotá
Phone: +57 (0) 1 - 5 70 63 53
Fax: +57 (0) 1 - 5 70 73 35
E-mail: aguerrero@agp.com.co
www.agp.com.co

MEXICO
Flender de Mexico S.A. de C.V.
17, Pte, 713 Centro
72000 Puebla
Phone: +52 (0) 2 22 - 2 37 19 00
Fax: +52 (0) 2 22 - 2 37 11 33
E-mail: szugasti@flendermexico.com
www.flendermexico.com

SALES OFFICES:
Flender de Mexico S.A. de C.V.
Lago Nargis No. 38
Col. Granada,
11520 Mexico, D.F.
Phone: +52 (0) 55 - 52 54 30 37
Fax: +52 (0) 55 - 55 31 69 39
E-mail: info@flendermexico.com

Flender de Mexico S.A. de C.V.
Ave. San Pedro No. 231-5
Col. Miravalle
64660 Monterrey, N.L.
Phone: +52 (0) 81 - 83 63 82 82
Fax: +52 (0) 81 - 83 63 82 83
E-mail: info@flendermexico.com

PERU
Potencia Industrial E.I.R.L.
Calle Victor González Olaechea N° 110
Urb. La Aurora - Miraflores,
P.O.Box: Av. 2 de Mayo N° 679
Of.108-Miraflores
Casilla N° 392, Lima 18
Phone: +51 (0) 1 - 2 42 84 68
Fax: +51 (0) 1 - 2 42 08 62
E-mail: cesarzam@chavin.rcp.net.pe

USA
Flender Corporation
950 Tollgate Road
P.O. Box 1449, Elgin, IL. 60123
Phone: +1 (0) 8 47 - 9 31 19 90
Fax: +1 (0) 8 47 - 9 31 07 11
E-mail: flender@flenderusa.com
www.flenderusa.com

Flender Corporation
Service Centers West
4234 Foster Ave.
Bakersfield, CA. 93308
Phone: +1 (0) 6 61 - 3 25 44 78
Fax: +1 (0) 6 61 - 3 25 44 70
E-mail: flender1@lightspeed.net

VENEZUELA
F. H. Transmisiones S.A.
Urbanización Buena Vista
Calle Johan Schafer o Segunda Calle
Municipio Sucre, Petare
Caracas
Phone: +58 (0) 2 - 21 52 61
Fax: +58 (0) 2 - 21 18 38
E-mail: fhtransm@telcel.net.ve
www.fhtransmisiones.com

A S I A

BANGLADESH / SRI LANKA
Please refer to Flender Limited
No. 2 St. George's Gate Road
5th Floor, Hastings
Kolkata - 700 022
Phone: +91 (0) 33 - 2 23 05 45
Fax: +91 (0) 33 - 2 23 18 57
E-mail: flender@flenderindia.com

PEOPLE'S REPUBLIC OF CHINA
Flender Power Transmission
(Tianjin) Co. Ltd.
ShuangHu Rd.- Shuangchen Rd. West
Beichen Economic Development
Area (BEDA)
Tianjin 300400
Phone: +86 (0) 22 - 26 97 20 63
Fax: +86 (0) 22 - 26 97 20 61
E-mail: flender@flendertj.com
www.flendertj.com

Flender Power Transmission
(Tianjin) Co. Ltd.
Beijing Office
C-415, Lufthansa Center
50 Liangmaqiao Road, Chaoyang District
Beijing 100016
Phone: +86 (0) 10 - 64 62 21 51
Fax: +86 (0) 10 - 64 62 21 43
E-mail: beijing@flenderprc.com.cn

Flender Power Transmission
(Tianjin) Co. Ltd.
Shanghai Office
1101-1102 Harbour Ring Plaza
18 Xizang Zhong Rd.
Shanghai 200 001
Phone: +86 (0) 21 - 53 85 31 48
Fax: +86 (0) 21 - 53 85 31 46
E-mail: shanghai@flenderprc.com.cn

Flender Power Transmission
(Tianjin) Co. Ltd.
Wuhan Office
Rm. 1503, Jianyin Building,
709 Jianshedadao
Wuhan 430 015
Phone: +86 (0) 27 - 85 48 67 15
Fax: +86 (0) 27 - 85 48 68 36
E-mail: wuhan@flenderprc.com.cn

Flender Power Transmission
(Tianjin) Co. Ltd.
Guangzhou Office
Rm. 2802, Guangzhou International
Electronics Tower
403 Huanshi Rd. East
Guangzhou 510 095
Phone: +86 (0) 20 - 87 32 60 42
Fax: +86 (0) 20 - 87 32 60 45
E-mail: guangzhou@flenderprc.com.cn

Flender Power Transmission
(Tianjin) Co. Ltd.
Chengdu Office
G-6 / F Guoxin Mansion,
77 Xiyu Street
Chengdu 610 015
Phone: +86 (0) 28 - 86 19 83 72
Fax: +86 (0) 28 - 86 19 88 10
E-mail: chengdu@flenderprc.com.cn

Flender Power Transmission
(Tianjin) Co. Ltd.
Shenyang Office
Rm. 2-163, Tower I, City Plaza Shenyan
206 Nanjing Street (N), Heping District
Shenyang 110 001
Phone: +86 (0) 24 - 23 34 20 48
Fax: +86 (0) 24 - 23 34 20 46
E-mail: shenyang@flenderprc.com.cn

Flender Power Transmission
(Tianjin) Co. Ltd.
Xi'an Office
Rm. 302, Shaanzi Zhong Da
International Mansion
30 Southern Rd.
Xi'an 710 002
Phone: +86 (0) 29 - 7 20 32 68
Fax: +86 (0) 29 - 7 20 32 04
E-mail: xian@flenderprc.com.cn

INDIA
Flender Limited
Head Office:
No. 2 St. George's Gate Road
5th Floor, Hastings
Kolkata - 700 022
Phone: +91 (0) 33 - 22 23 05 45
Fax: +91 (0) 33 - 22 23 08 30
E-mail: flender@flenderindia.com

Flender Limited
Industrial Growth Centre
Rakhajungle, Nimpura
Kharagpur - 721 302
Phone: +91 (0) 3222 - 23 33 07
Fax: +91 (0) 3222 - 23 33 64
E-mail: works@flenderindia.com

SALES OFFICES:
Flender Limited
Eastern Regional Sales Office
No. 2 St. George's Gate Road
5th Floor, Hastings
Kolkata - 700 022
Phone: +91 (0) 33 - 22 23 05 45
Fax: +91 (0) 33 - 22 23 08 30
E-mail: ero@flenderindia.com

Flender Limited
Western Regional Sales Office
Plot No. 23, Sector 19 - C
Vashi, Navi Mumbai - 400 705
Phone: +91 (0) 22 - 27 65 72 27
Fax: +91 (0) 22 - 27 65 72 28
E-mail: wro@flenderindia.com

Flender Limited
Southern Regional Sales Office
41 Nelson Manickam Road
Aminjikarai,
Chennai - 600 029
Phone: +91 (0) 44 - 23 74 39 21
Fax: +91 (0) 44 - 23 74 39 19
E-mail: sro@flenderindia.com

Flender Limited
Northern Regional Sales Office
209-A, Masjid Moth, 2nd Floor
(Behind South Extension II)
New Delhi - 110 049
Phone: +91 (0) 11 - 26 25 02 21
Fax: +91 (0) 11 - 26 25 63 72
E-mail: nro@flenderindia.com

INDONESIA
Flender Singapore Pte. Ltd.
Representative Office
Perkantoran Puri Niaga II
Jalan Puri Kencana Blok J1
No. 2i, Kembangan
Jakarta Barat 11610
Phone: +62 (0) 21 - 5 82 86 24
Fax: +62 (0) 21 - 5 82 86 23
E-mail: bobwall@cbn.net.id

IRAN
Cimaghand Co. Ltd.
P.O. Box 15745-493
No. 13, 16th East Street
Beyhaghi Ave., Argentina Sq.
Tehran 15156
Phone: +98 (0) 21 - 8 73 02 14
Fax: +98 (0) 21 - 8 73 39 70
E-mail: info@cimaghand.com

ISRAEL
Greenshpon Engineering Works Ltd.
Haamelim Street 20
P.O. Box 10108, 26110 Haifa
Phone: +972 (0) 4 - 8 72 11 87
Fax: +972 (0) 4 - 8 72 62 31
E-mail: sales@greenshpon.com
www.greenshpon.com

JAPAN
Flender Japan Co., Ltd.
WBG Marive East 21F
Nakasa 2 - 6
Mihama-ku, Chiba-shi
Chiba 261-7121
Phone: +81 (0) 43 - 2 13 39 30
Fax: +81 (0) 43 - 2 13 39 55
E-mail: contact@flender-japan.com

KOREA
Flender Ltd.
7th Fl. Dorim Bldg.
1823 Bangbae-Dong, Seocho-Ku,
Seoul 137-060
Phone: +82 (0) 2 - 34 78 63 37
Fax: +82 (0) 2 - 34 78 63 45
E-mail: flender@unitel.co.kr

KUWAIT
South Gulf Company
Al-Reqai, Plot 1, Block 96
P.O. Box 26229, Safat 13123
Phone: +965 (0) - 4 88 39 15
Fax: +965 (0) - 4 88 39 14
E-mail: adelameen@hotmail.com

LEBANON
Gabriel Acar & Fils s.a.r.l.
Dahr-el-Jamal
Zone Industrielle, Sin-el-Fil
B.P. 80484, Beyrouth
Phone: +961 (0) 1 - 49 82 72
Fax: +961 (0) 1 - 49 49 71
E-mail: gacar@beirut.com

MALAYSIA
Flender Singapore Pte. Ltd.
Representative Office
37 A - 2, Jalan PJU 1/39
Dataran Prima
47301 Petaling Jaya
Selangor Darul Ehsan
Phone: +60 (0) 3 - 78 80 42 63
Fax: +60 (0) 3 - 78 80 42 73
E-mail: flender@tm.net.my

PAKISTAN
Please refer to
A. Friedr. Flender AG
46393 Bocholt
Phone: +49 (0) 28 71 - 92 22 59
Fax: +49 (0) 28 71 - 92 15 16
E-mail: ludger.wittag@flender.com

PHILIPPINES
Flender Singapore Pte. Ltd.
Representative Office
28/F, Unit 2814
The Enterprise Centre
6766 Ayala Avenue corner
Paeso de Roxas, Makati City
Phone: +63 (0) 2 - 8 49 39 93
Fax: +63 (0) 2 - 8 49 39 17
E-mail: roman@flender.com.ph

BAHRAIN / IRAQ / JORDAN / LYBIA
OMAN / QATAR / U.A.E. / YEMEN
Please refer to A. Friedr. Flender AG
Middle East Sales Office
IMES Sanayi Sitesi
E Blok 502, Sokak No. 22
81260 Dudullu - Istanbul
Phone: +90 (0) 2 16 - 4 99 66 23
Fax: +90 (0) 2 16 - 3 64 59 13
E-mail: meso@flendertr.com

SAUDI ARABIA
South Gulf Co.
Al-Khobar, Dahran Str.
Middle East Trade Center
3rd floor, Flat # 23
P.O. Box 20434 31952 Al-Khobar
Phone: +966 (0) 3 - 8 87 53 32
Fax: +966 (0) 3 - 8 87 53 31
E-mail: adelameen@hotmail.com

SINGAPORE
Flender Singapore Pte. Ltd.
13 A, Tech Park Crescent
Singapore 637843
Phone: +65 (0) - 68 97 94 66
Fax: +65 (0) - 68 97 94 11
E-mail: flender@singnet.com.sg
www.flender.com.sg

SYRIA
Misrabi Co & Trading
Mezzeh Autostrade Transportation
Building 4/A, 5th Floor
P.O. Box 12450, Damascus
Phone: +963 (0) 11 - 6 11 67 94
Fax: +963 (0) 11 - 6 11 09 08
E-mail: ismael.misrabi@gmx.net

TAIWAN
A. Friedr. Flender AG
Taiwan Branch Company
1F, No. 5, Lane 240
Nan Yang Street, Hsichih
Taipei Hsien 221
Phone: +886 (0) 2 - 26 93 24 41
Fax: +886 (0) 2 - 26 94 36 11
E-mail: flender_tw@flender.com.tw

THAILAND
Flender Singapore Pte. Ltd.
Representative Office
23/F M Thai Tower, All Seasons Place
87 Wireless Road, Phatumwan
Bangkok 10330
Phone: +66 (0) 2 - 6 27 91 09
Fax: +66 (0) 2 - 6 27 90 01
E-mail: christian.beckers@flender.th.com

VIETNAM
Flender Singapore Pte. Ltd.
Representative Office
Suite 6/6A, 16F Saigon Tower
29 Le Duan Street, District 1
Ho Chi Minh City, Vietnam
Phone: +84 (0) 8 - 8 23 62 97
Fax: +84 (0) 8 - 8 23 62 88
E-mail: flender@hcm.vnn.vn

A U S T R A L I A

Flender (Australia) Pty. Ltd.
9 Nello Place, P.O. Box 6047
Wetherill Park
N.S.W. 2164, Sydney
Phone: +61 (0) 2 - 97 56 23 22
Fax: +61 (0) 2 - 97 56 48 92, 97 56 14 92
E-mail: sales@flender.com.au
www.flender.com.au

SALES OFFICES:
Flender (Australia) Pty. Ltd.
Suite 3, 261 Centre Rd.
Bentleigh, VIC 3204 Melbourne
Phone: +61 (0) 3 - 95 57 08 11
Fax: +61 (0) 3 - 95 57 08 22
E-mail: sales@flender.com.au

Flender (Australia) Pty. Ltd.
Suite 5, 1407 Logan Rd.
Mt. Gravatt
QLD 4122, Brisbane
Phone: +61 (0) 7 - 34 22 23 89
Fax: +61 (0) 7 - 34 22 24 03
E-mail: sales@flender.com.au

Flender (Australia) Pty. Ltd.
Suite 2 403 Great Eastern Highway
W.A. 6104, Redcliffe - Perth
Phone: +61 (0) 8 - 94 77 41 66
Fax: +61 (0) 8 - 94 77 65 11
E-mail: sales@flender.com.au

NEW ZEALAND
Please refer to Flender (Australia) Pty. Ltd.
9 Nello Place, P.O. Box 6047
Wetherill Park
N.S.W. 2164, Sydney
Phone: +61 (0) 2 - 97 56 23 22
Fax: +61 (0) 2 - 97 56 48 92
E-mail: sales@flender.com.au

12. Declaration by the manufacturer

Declaration by the manufacturer

in accordance with EC Engineering Guideline 98/37/EC, Appendix II B

We hereby declare that the

Oil supply systems type **OWGD**
Size 1 to 10

described in these Operating Instructions are intended for incorporation in a machine, and that it is prohibited to put them into service before verifying that the machine into which they are incorporated complies with the EC Guidelines (original edition 98/37/EC including any subsequent amendments thereto).

This Manufacturer's Declaration takes into account all the unified standards (inasmuch as they apply to our products) published by the European Commission in the Official Journal of the European Community.

Bocholt, 1998-05-20

Signature (person responible for products)

Operating and Installation Instructions

Stop and control cocks with stuffing-box packing

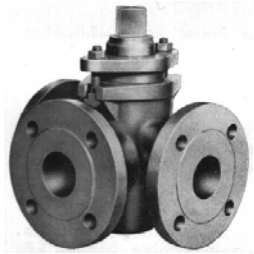

1.0	**Operating Instructions - General**	**2**	**5.0**	**Installation**	**5**
2.0	**Reference to dangers**	**2**	5.1	General installation instructions	5
2.1	Meaning of the symbols	2	5.2	Installation instructions for heatable cocks	5
2.2	Terms pertinent to safety	2			
2.3	Qualified staff	3			
3.0	**Handling**	**3**	**6.0**	**Dangers occurring during installation, operation and maintenance.**	**6**
3.1	Storing	3			
3.2	Transport	3	**7.0**	**Commissioning**	**6**
3.3	Handling prior to installation	3	**8.0**	**Maintenance**	**7**
4.0	**Description**	**3**	**9.0**	**Cause and remedial measures for failures**	**7**
4.1	Field of application	3	**10.0**	**Fault diagnosis chart**	**8**
4.2	Mode of operation	3	**11.0**	**Dismantling of the cock**	**9**
4.3	Graph	4	**12.0**	**Warranty**	**9**
4.4	Technical data – Notes	5	**13.0**	**Conformity / manufacturer's certificate**	**10**
4.5	Marking	5			

1.0 Operating Instructions - General

These operating instructions contain the instructions for a safe installation and operation of the cocks as provided. Should this involve difficulties that cannot be solved with the aid of these operating instructions, apply to the supplier / manufacturer for further information.
These operating instructions are in accordance with the relevant European Safety Standards and the rules and bodies of regulations valid in the Federal Republic of Germany.
When using the cocks outside the Federal Republic of Germany, the operating company or the company in charge of the design of the plant has to make sure that the valid national bodies of regulations are observed.
The manufacturer reserves the right to make alterations and improvements at any time. The use of these operating instructions requires the qualities of the user as described under item 2.3 "Qualified staff".
The operating staff has to be instructed in accordance with these operating instructions.

2.0 Reference to dangers

2.1 Meaning of the symbols

Warning of a general danger

2.2 Terms pertinent to safety

The signal terms DANGER, WARNING, CAUTION and NOTE are used in these operating instructions if there are indications of special dangers or for extraordinary information where special markings are required.

DANGER means that there is a mortal danger in case of non-observance and / or that considerable damage to property might occur.

WARNING means that there is a danger of injury in case of non-observance and / or that damage to property might occur.

CAUTION means that there is a danger of injury in case of non-observance and / or that damage to property might occur.

NOTE means that special attention is focussed on technical interrelations.

The observance of the other transport, installation, operating and maintenance instructions as well as technical data (in the operating instructions, the product documentation, and at the device itself) that are not especially set off, however, is equally imperative in order to avoid faults that might indirectly or directly cause personal injury or damage to property.

2.3 Qualified staff

These are people familiar with the erection, installation, commissioning, operation and maintenance of the product and who have the qualifications appropriate for their occupations and functions, such as instruction and obligation concerning the observance of all regional and internal regulations and requirements conditional on the application;
Training and instruction according to the standards of safety requirements concerning the maintenance and use of appropriate safety and protection equipment;
First-aid training, etc. (see also TRB 700)

3.0 Handling

3.1 Storing

- Storing temperature –20°C to +65°C, dry and free of dirt.
- The coat of varnish is a primer that is to give only corrosion protection for transport and storing purposes. Do not impair the paint.
- Moist rooms require desiccants or heatings to prevent condensate formation.

3.2 Transport

- Transport temperature –20°C to +65°C.
- Protect from external violence, shock and impact, vibrations.
- Do not impair coat of varnish.

3.3 Handling prior to installation

In case of the protecting cap type, remove protecting caps right before installation!
Protect from atmospheric influence, such as moisture (otherwise, use desiccants).
Treat with due care in order to protect from damage.

4.0 Description

4.1 Field of application

A+E cocks are used for "shutting off and regulating medium flows".
The field of application of the cock is subject to the responsibility of the plant planners.

- A+E cocks made of GG-25 are not released for an application as heat transfer medium in plants
- **Consultation is imperative in case of an application for mediums requiring or excluding certain materials.**
- Marking in accordance with the Pressure Equipment Directive, Section 3, sub-section 3.

4.2 Mode of operation (see 4.3 graph, figure 1)

By turning the plug (2) the cock is closed or "regulated". Sealing the cock is done by grinding in plug (2) and housing (1). The parts cannot be replaced. The stuffing-box packing (5) serves as spring assembly and provides the required application force of the plug in the housing. The application force is adjusted via the stuffing-box bolts (7).

4.3 Graph

Figure 1:

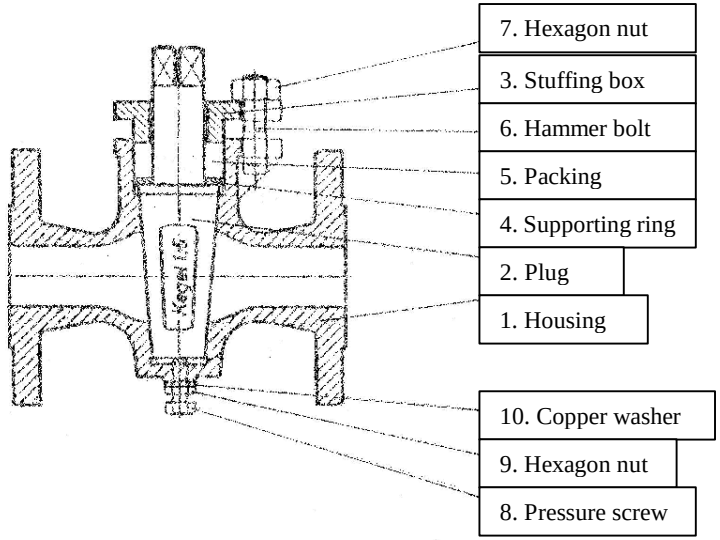

Figure 2: Packing ring

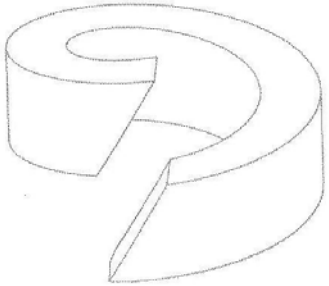

4.4 Technical data

- Main dimensions of the cocks
Data can be taken from the table of dimensions

4.5 Marking

Pressure stage	PN 10/16
Figure stamps	Year of manufacture / Check
Type / Model	Cock type / Model No
Manufacturer	

no CE – marking according to the Pressure Equipment Directive, Section 3, sub-section 3.

5.0 Installation

5.1 General installation instructions

Mind the below-mentioned items in addition to the general installation directives:

- Remove flange covers, if existing.
- The interior of cock and pipeline have to be free from foreign particles.
- Mind the installation position with regard to the flow.
- Referring to the plug direction, any installation position is possible, preferred plug position: vertical.
- Centre gaskets between the flanges.
- Connecting flanges have to correspond with each other.
- If steam is used as a medium, pipelines have to be laid with a gradient to prevent water pocket formation. Steam traps are required to avoid water hammers.
- Ensure stressfree installation.
- The cock is not allowed to serve as a locating point, it has to be carried by the piping system.
- Protect cocks from being polluted, in particular during construction works.
- Thermal expansions of the pipeline have to be balanced by expansion joints.

5.2 Installation data for heated cocks

- Type 71/86 HKF DN 65 – 80 - 100

After the plant has been commissioned and the operating temperature reached, the cocks have to be readjusted (see 4.3 Graph; Figure 1)

1. Loosen the pressure screw (8).
2. Tighten the stuffing-box nuts (7); after repeatedly turning the plug, the switching torque should be at around 120 Nm.
3. Turn then the pressure screw (8) towards the plug (2), with a good application force be felt. Pull then the check nut (9) with the copper washer (10) towards the bottom of the housing (1).

According to the switching rate of the cocks, steps 1, 2 and 3 should be repeated, in order that a switching torque of 120 Nm can be maintained (see 8.0 "Maintenance").

6.0 Dangers occurring during installation, operation and maintenance

DANGER !

Safe operation of the stuffing-box cock is ensured only if installed and commissioned with due care by qualified staff (see item 2.3 "Qualified Staff") in compliance with the warning instructions of these operating instructions. In addition, the observance of the general installation and safety instructions for the pipeline and plant construction and the professional use of tools and protecting equipment have to be guaranteed. It is imperative for all works at the cock or when handling the cock, to observe the operating instructions of the cock. The non-observance may result in injuries or damage to property.

If the cock is used as an end piece, a safety contrivance, such as a blank, a blind flange, etc. is required for repair works, according to the provisions of the employer's liability insurance association of the gasworks and waterworks.

7.0 Commissioning

- Prior to commissioning, check the data for material, pressure, temperature and flow direction by means of the piping diagram.
- Observe TRB 700
- Residues in the pipelines and cocks and fittings (dirt, welding beads, etc.) inevitably lead to leakage.

DANGER !

The following has to be ensured prior to any commissioning of a new plant or recommissioning of a plant after repair works or retrofitting:
- The proper completion of all installation works
- Commissioning by "Qualified staff" only (see item 2.3).
- The proper functional position of the cock
- Fixing or repairing of existing safety contrivances

8.0 Maintenance

Maintenance and maintenance intervals have to be determined by the operator according to the application conditions, see TRB700.

- Mind safety instructions
- In case of leakage at the plug, fasten stuffing-box packing gradually and steadily with hexagon nuts until tightness is reached.

WARNING ! In case of hot and harmful mediums refill or replace stuffing-box packing

- Refilling the stuffing box is permitted only when the medium is cooled down and the plant unpressurized.
  (For "Qualified staff" see item 2.3)
  In case of corrosive and / or aggressive mediums the stuffing-box cock, prior to being refilled, has to be drained and aerated.
- Regular checks for tightness increases the life of the stuffing-box cock.
- See to it that an angular cut is being made when cutting the stuffing-box packing to size.
  (see 4.3 graph, figure 2)

CAUTION ! Note that the stuffing-box packing is compatible to the medium.

WARNING ! Observe item 11.0 prior to dismounting the cock.

- Prior to the assembly of the cock, note that the gasketing areas must be cleaned and a fresh lubricant used.
  Lubricant: e.g. Gleitmo 100

CAUTION ! Always note that the lubricant is compatible with the medium.

- Put on stuffing box.
- Tighten crosswise and steadily the hexagon nuts of the hammer bolts.

9.0 Cause and remedial measure in case of failure

In case of malfunction or failure of the operational performance, check whether the installation and setting works were carried out and completed according to these operating instructions.
Observe TRB 700.

Compare the data for material, pressure, temperature and flow direction with the piping diagram
Moreover, check whether the operating conditions correspond to the technical data shown in the data sheet or on the cock.

DANGER !
For trouble shooting it is imperative to observe the safety instructions.

If the failure cannot be eliminated from below "**Fault Diagnosis Chart**", consult the supplier / manufacturer.

10.0 Fault diagnosis chart

Fault	Possible causes	Remedial measure
No flow	Cock closed Flange covers were not removed	Open cock Remove flange covers
Small flow	Cock not sufficiently opened Clogging in the piping system	Open cock Check piping system
Sluggish operation / cock cannot be opened	Gland too much fastened	Slight loosening of the gland hexagon nuts, however, tightness must remain ensured.
Not tight at the plug of the cock	Gland too loose	Fasten gland hexagon nuts, if required, refill packing of the packing gland. Observe installation position and idling of the cock, observe warning instructions. **Only for unpressurized system !**
Cock leaky at seat	Not tightly closed Foreign-object damage of bevel seat Polluted medium (solid particles)	Close cock Replace cock, inquire at manufacturer's /supplier's **Only for unpressurized system !** Clean cock, install strainer *upstream* of the cock. **Only for unpressurized system !**
Flange rupture (cock piping)	Bolts fastened one-sided angezogen Counter flanges are not in alignment.	Direct pipeline Mount new cock **Only for unpressurized system !**

Caution:
- Observe item 11.0 prior to installation and repair works !
- Observe item 7.0 prior to recommissioning !

11.0 Dismantling of the stuffing-box cock

In addition to the general installation directives and the TRB 700, observe the following items:
- unpressurized piping system
- cooled-down medium
- drained plant
- Aerate piping system in case of caustic, flammable, aggressive or toxic mediums.
- Have installation works done by qualified staff only (see item 2.3).

12.0 Warranty

Scope and period of warranty is shown in the version of the "General terms and conditions of the A+E Armaturen Erichlandwehr GmbH“ valid at the time of delivery, or differing from that, in the sales contract itself.

We warrant faultlessness corresponding to the respective state of the art and the confirmed application.

Warranty claims cannot be asserted for damage resulting from improper handling or from the non-observance of these operating and installation instructions, the regulations for prevention of accidents, the standards EN, DIN, VDE and other bodies of regulations.

Neither is subject to warranty damage caused during the operation under operating conditions that differ from the data sheet or other agreements.

Justified claims will be treated by us or special companies commissioned by us in order to eliminate the defects.

Claims that go beyond warranty are excluded. There is no right to replacement.

Maintenance works, installation of foreign parts, alteration of the construction, and natural wear are excluded from warranty.

Do not report possible damage to goods in transit to us, but *immediately* to your competent goods office, to the railway or to the forwarder, as any claims for damages to those companies will otherwise forfeit.

A+E Armaturen Erichlandwehr GmbH
Degenweg 2 in D-33659 Bielefeld
Phone (0521) 401225 Fax (0521) 403210
Internet: www.armaturen-erichlandwehr.de E-mail: info@armaturen-erichlandwehr.de

13.0 Conformity / Manufacturer's Certificate

Manufacturer's Certificate

Pressure Equipment Directive 97/23/EG

The products manufactured by us fall under the scope of section 3, sub-section 3 of the directive 97/23/EG (Pressure Equipment Directive).

The meet the requirements.

According to the marking, the stuffing-box cocks are allowed to be used up to a maximum permissible pressure of 16 bar (DN 15 to DN 100) and 10 bar (DN 125 and DN 150) for fluids of the fluid group 1.

Note:

The material compatibility must be proven, e.g. according to ADR or DIN 6601.

If the delivered type is installed in a machine of plant, the commissioning of the machine / plant is not allowed until it has been established that the machine / plant corresponds with the regulations of the EC-Directive Machinery, version 98/37/EG.

Bielefeld, February 2002

gez. A. Breulmann
.....
(Breulmann, Managing Director)

OPERATING MANUAL

Steimel Gear Pumps
and
Pump Units

Series B, R, SF, T

Type designation : .....

Serial No. : .....

Gebr. Steimel GmbH & Co
Maschinenfabrik

Postfach 1565
D-53762 Hennef

Telephone (02242) 88 09 - 0 Fax (02242) 88 09 160

1 General
1.1 Intended application
1.2 Product information
1.2.1 Type designation and works serial No.
1.2.2 Technical data sheet
1.2.3 Permitted use

2 Safety
2.1 Identification of safety instructions in the Operating Manual
2.2 Qualification and training of operating personnel
2.3 Hazards in the event of non-compliance with the safety instructions
2.4 Compliance with regulations pertaining to safety at work
2.5 Safety instructions relevant for operation
2.6 Safety instructions relevant for maintenance, inspection and assembly work
2.7 Unauthorised alterations and production of spare parts
2.8 Unauthorised modes of operation

3 Transport and intermediate storage
3.1 Transport
3.2 Intermediate storage

4 Technical description
4.1 General description
4.2 Construction and mode of operation
4.3 Mechanical construction
4.3.1 Pump casing
4.3.2 Gear wheels
4.3.3 Shafts, bearings and lubrication
4.3.4 Shaft seal
4.3.5 Drive
4.4 Accessories
4.4.1 Pressure relief valve
4.4.2 Heating and cooling units

5 Mounting / installation
5.1 Installation position
5.2 Mounting for the first time
5.3 Drive elements
5.3.1 Aligning flexible couplings
5.3.2 Coupling guard
5.4 Electrical connection
5.5 Pipes
5.5.1 Purging
5.5.2 Connecting pipes
5.5.3 Additional connections
5.5.4 Suction line
5.5.5 Delivery line
5.5.6 Pressure test and leakage test
5.6 Protection against foreign bodies and contamination

6 Starting up / shutting down
6.1 Preparations for starting up
6.2 Initial commissioning
6.3 Placing back into operation
6.4 Shutting down

7 Maintenance / repair
7.1 General information
7.2 Shaft seal
7.2.1 Stuffing box packing
7.2.2 Axial face seal / rotary shaft seal
7.2.3 Twin seals
7.2.4 Pressure relief valve
7.3 Dismantling and re-assembly
7.3.1 Basic instructions
7.3.2 Dismantling the unit
7.3.3 Dismantling the pump
7.3.4 Assembling the pump / unit
7.4 Spare parts

8 Related drawings

9 Faults; causes and remedies

1 General

1.1 Intended application

Steimel gear pumps are suitable for pumping lube oils, fuel oils and other lubricating fluids.
The fluids pumped may not contain any abrasive components and may not chemically attack the materials of which the pump is made.
The field of application of these pumps extends from oil hydraulics through lubrication systems to pure pumping applications.
Above all, the pumped medium must always be clean and have good lubricating properties in order to ensure that the pump operates correctly, in order to ensure a high level of operating reliability and safety and in order to ensure a long service life.

1.2 Product information

1.2.1 Type designation and works serial No.

The full type designation is specified in the technical data sheet or the order confirmation.
The works serial No. comprises the contract No. and a consecutive serial No. (e.g. 94 1234-2). It is imprinted directly on the rating plate or on the pump.

1.2.2 Technical data sheet

The technical data sheet is a part of our sales order confirmation and should contain all important technical details agreed between the purchaser and manufacturer, such as

- designation, type, size
- item No.
- project drawing / dimension sheet
- spare parts list for parts subject to wear
- related Operating Manuals
- suction and delivery connection
- materials
- shaft seal
- pumped medium / field of application
- direction of rotation
- accessories
- hydraulic parameters such as delivery rate, operating pressure, speed, viscosity range and temperature range

If required, also:

- pressure relief valve / safety facilities
- special installation position
- suction characteristics
- operating or working range / scheduled or permitted use
- sound pressure level
- power requirement
- internal preservation
- surface protection / paint finish
- weight
- references to tests, certificates and acceptance tests
- date of issue

in the case of pump units, also:

- drive type / motor / transmission
- motor and transmission data
- coupling / belt drive
- sub-plate, intermediate bracket / pump mount
- accessories / safety facilities
- references to required certificates
- miscellaneous.

1.2.3 Permitted use

The pump / pump unit is designed only for the field of application listed in the technical data sheet of our order confirmation.
Differing operating conditions will necessitate new contractual agreements.

2 Safety

This Operating Manual gives basic instructions which are to be observed during installation, operation and maintenance of the pump. It is therefore imperative that this Manual be read by the responsible personnel / operator prior to assembly and commissioning. It is always to be kept available at the installation site.

It is not only the general safety instructions contained under this main heading "Safety" that are to be observed but also the specific information provided under the other main headings.

2.1 Identification of safety instructions in the Operating Manual

Safety instructions given in this Manual, non-compliance with which would affect safety are identified by the following symbol:

See DIN 4844-W 9

or where electrical safety is involved, with

see DIN 4844-W 8.

The word CAUTION

indicates safety information which may result in risks to the machine and its function if the information is not observed.

It is imperative that signs affixed to the machine, e.g.

- arrow indicating the direction of rotation

- symbols indicating fluid connections

be observed and kept legible.

2.2 Qualification and training of operating personnel

The personnel responsible for operation, maintenance, inspection and assembly must be adequately qualified. Scope of responsibility and supervision of the personnel must be exactly defined by the plant operator. If the staff do not have the necessary knowledge, they must be trained and instructed, which may be performed by the machine manufacturer or supplier on behalf of the plant operator. Moreover, the plant operator is to make sure that the contents of the Operating Manual are fully understood by the personnel.

2.3 Hazards in the event of non-compliance with the safety instructions

Non-compliance with the safety instructions may produce a risk to the personnel as well as to the environment and the machine and results in a loss of any right to claim damages.

For example, non-compliance may involve the following hazards:

- Failure of important functions of the machine/plant

- Failure of specified procedures of maintenance and repair

- Exposure of people to electrical, mechanical and chemical hazards

- Endangering the environment owing to hazardous substances being released.

2.4 Compliance with regulations pertaining to safety at work

When operating the pump, the safety instructions contained in this Manual, the relevant national accident prevention regulations and any other service and safety instructions issued by the plant operator are to be observed.

2.5 Safety instructions relevant for the plant operator

- If hot or cold machine components involve hazards, they must be guarded against accidental contact on site.

- Guards for moving parts (e.g. coupling) must not be removed from the machine while in operation.

- Any leakage of hazardous (e.g. explosive, toxic, hot) fluids (e.g. from the shaft seal) must be drained away so as to prevent any risk to persons or the environment. Statutory regulations are to be complied with.

- Hazards resulting from electricity are to be prevented (see for example, the VDE Specifications and the bye-laws of the local power supply utilities).

2.6 Safety instructions relevant for maintenance, inspection and assembly work

It shall be the plant operator's responsibility to ensure that all maintenance, inspection and assembly work is performed by authorised and qualified personnel who have adequately familiarised themselves with the subject matter by studying this Manual in detail.

Any work on the machine shall only be performed when it is at a standstill, it being imperative that the procedure for shutting down of the machine described in this Manual be followed.
Pumps and pump units which convey hazardous media must be decontaminated.

On completion of work all safety and protective facilities must be re-installed and made operative again.

Prior to restarting the machine, the instructions listed under "Initial commissioning" are to be observed.

2.7 Unauthorised alterations and production of spare parts

Any modification may be made to the machine only after consultation with the manufacturer. Using spare parts and accessories authorised by the manufacturer is in the interest of safety. Use of other parts may exempt the manufacturer from any liability.

2.8 Unauthorised modes of operation

The reliability of the machine delivered will be only guaranteed if it is used in the manner intended, in accordance with Clause 1 of this Manual. The limit values specified in the data sheet must under no circumstances be exceeded.

3 Transport and intermediate storage

3.1 Transport

The pump / the pump unit is delivered in assembled condition. Lube oils for transmissions, confining and sealing fluid and valves / fittings are delivered in separate packagings if necessary.

The pump / the pump unit is packaged differently, depending on the transport route and size. The packaging complies with our general packaging guidelines unless otherwise contractually agreed. When transporting the complete unit, the cables must be attached, as shown, to pump and motor (not to the eyebolt of the motor and pump).

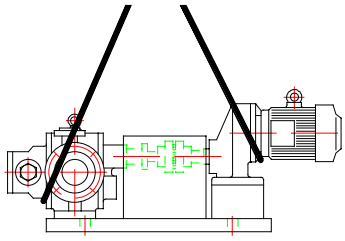

The motor suspension eyebolts are suitable only f or the weight of the motor. Likewise, the pump eyebolt is suitable only for the weight of the pump. Consequently, additional loads attached to the motor and pump may not be raised with these eyebolts.

Please avoid jerky movements, shock and heavy vibration when raising and lowering during transportation !

3.2 Intermediate storage

The pump / the pump unit must be stored on a timber support at a protective location in the position of normal use and must be covered.

It is not permitted to stack heavy pumps / pump units one above the other.

The pump is not provided with internal preservation. In some cases, a film of test medium originating from the test bench run may still adhere to the inside faces. A mineral oil is used as the test medium unless otherwise agreed.
Should you intend to store the unit for long periods, we advise you to contractually agree on a special internal preservation.
The condition of the pump and its preservation must be checked at least once per year!
If stored in the open air, please carefully cover the pump / pump unit and ensure that it is not exposed either to moisture or foreign bodies.

4 Technical description

4.1 General description

The gear pump, being the most popular type of rotary, positive-displacement pump, owes its great popularity primarily to the sophisticated involute gearing which permits low-cost series production with high precision, besides its simple construction. Most gear pumps have straight-toothed spur gears. Certain types are fitted with helical-tooth spur gears or with double-helical (herring-bone) gears in an effort to achieve greater running smoothness.

4.2 Construction and mode of operation

In line with the diverse fields of application of the gear pumps, we have developed a variety of different models.
Very low-pressure gear pumps for pumping moderately fluid to viscous media generally have a large displacement volume and low speed of rotation. It is more economical to pump low-viscosity media with small, high-speed gear pumps.
The mode of operation of the external gear pump results from the engaged teeth. This is where the actual separation process between suction and pressure chamber occurs.
The drive gear wheel / drive pinion drives the mating gear wheel / mating pinion, thus causing the intermeshing teeth to release the tooth spaces abruptly.

When the gear wheels, which are surrounded by a casing or adapter on all sides, rotate, the tooth spaces fill with the medium to be pumped as the result of the partial vacuum produced and convey it outwards and around to the delivery end. Combing of the gear wheels which are turning in opposite directions forces the medium into the delivery line.
The delivery pressure produced by a pump builds up in the delivery line depending on the resistances opposing the delivery flow. These resistances result from pipe friction and the various installed fittings, fixtures and devices.
The power demand increases with increasing delivery pressure!

CAUTION The pump may never be operated with the suction or delivery line closed!

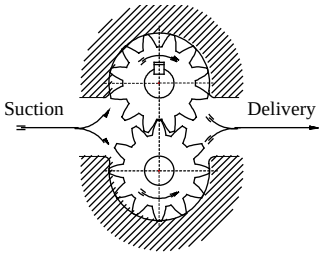

4.3 Mechanical construction

4.3.1 Pump casing

The pump casing encloses the gear wheels and is generally equipped with a suction and delivery connection for the pipes.
Depending on the particular type, it also contains a pressure relief valve and one side of the drive and counter-shaft bearing assembly.
In the case of the disk or plate design, the gear wheels are enclosed by a so-called adapter which has the shape of a plate, the thickness of which corresponds to approximately the length of the gear wheel.
The drive and counter-cover serves to accommodate the shaft bearing.
The shaft seal is accommodated in the drive cover or in a casing.

4.3.2 Gear wheels

Gear wheels have an involute gearing. Straight-tooth spur gears are generally used in feed pumps. Owing to the greater running smoothness, helical-tooth spur gears are given preference in high-speed lube oil pumps in the low pressure range. The gear wheel bodies are generally connected to the shaft by interference fits and, in some cases, also by feather keys. In many cases, shafts and gear wheels are designed as pinions. Materials, surface hardnesses, wear-resistant coatings and gearing quality will depend on the customer's sales order.

4.3.3 Shafts, bearings and lubrication

The pump shafts are mounted in plain bearing bushes. The bearing points must be adequately lubricated by the medium!

CAUTION The pump must always receive fluid and may never be allowed to run dry!

The running play on the sliding surfaces is rated so as to constantly guarantee an adequate lubrication film.
The lower the viscosity of a medium to be pumped, the closer the running play must be kept in order to achieve a favourable volumetric efficiency of the pump. However, this also necessitates a purer medium to be pumped in order to achieve high operating reliability and as long a pump service life as possible.

4.3.4 Shaft seal

On versions with stuffing box packing (P), this packing must drip slightly during operation in order to dissipate the frictional heat.
Ensure that the leakage is safely collected or discharged in controlled fashion.

On versions with axial face seal (G), this seal has only slight or invisible (vapour) leakage losses during operation. It requires no maintenance.

No maintenance is required either on versions with rotary shaft seal (R).

In the case of twin seals, such as GG or GR versions, a quench fluid recipient serves to lubricate and cool the downstream seal. These seal combinations serve to exclude air in the case of media which react in an undesirable manner when coming into contact with atmospheric oxygen.

4.3.5 Drive

CAUTION The pump must be driven free of vibration via a flexible coupling and the drive shaft may be subjected neither to radial forces nor axial forces!
Any radial loading of the shaft journal resulting from V belts, chains, drive gear wheels or so forth is cushioned by an additional radial bearing which is accommodated inside or outside the pump.
Please state the relevant parameters for design of this bearing in your purchase order.

4.4 Accessories

4.4.1 Pressure relief valve

The pump can be delivered with a built-in or mounted pressure relief valve or circulation valve which returns the pumped medium from the delivery end to the suction end in order to protect against overloading of the pump. This valve is suitable for occasional, brief response, not owing to regular operation. Rapid heating of the medium occurs should the valve respond for a longer period, and this may result in undesirable changes and may also disturb proper operation of the pump. We recommend inserting bypass-relief valves in a bypass with a return line to the supply tank for high pressures and long response times.

⚠ The setting of the pressure relief valve may be changed only after procuring the prior consent of the pump manufacturer!

The final pressure of the valve lies 20-30 % above the opening pressure.

4.4.2 Heating and cooling units

Types TM have double-walled casings or corresponding ducts and can be heated or cooled with a liquid or gaseous medium. Temperature sensors in the pump serve to monitor and safeguard the pump against inadmissible switch-on of the drive motor.

Types TE are heated with electrical heating cartridges. The temperature is controlled steplessly by means of a system regulator.

5 Mounting / installation

5.1 Installation position

Unless otherwise agreed, the pump should be mounted / installed so that the drive shaft and counter-shaft are vertically adjacent. The fact that the line connections are then horizontal is the best method of guaranteeing that as large a fluid quantity as possible remains in the pump when the pump is switched off. It then normally inducts this fluid "reservoir" easily again under normal conditions when restarted.

5.2 Mounting for the first time

Base-mounted pumps may be mounted only on precisely level supports, in order to avoid twisting.

Flange pumps must be mounted in a precisely machined flange centring ring. If machines are to be coupled, please ensure that the machines are carefully aligned. Wherever possible, please use torsion-resistant sub-plates or frames.

CAUTION On pump units with a sub-plate made of grey cast iron, please ensure that the deposit surface is absolutely flat and level!

On uneven deposit surfaces, the sub-plates may also be aligned with the aid of shims, but these shims must be well-set (snugly fitting).

5.3 Drive elements

Please also refer to 4.3.5 Drive.

- On a pump with free shaft extension, remove the shaft protection (if applicable, corrosion protection, e.g. with solvent, but not with emery paper).
- Fit and lock the drive element onto the shaft.

CAUTION Fit the coupling using a fitting tool. On no account may you force the coupling on by knocking or tapping since this could damage the shaft, gear wheels, bearing assembly, thrust rings and retaining rings for instance.

5.3.1 Aligning flexible couplings

The unit is correctly aligned if a straight-edge placed axially over both coupling halves is the same distance from the relevant shaft at all points on the circumference, whereby it must be noted that the measurement point must be turned as well by hand.

Moreover, both coupling halves must be the same distance from each other at all points on the circumference. This can be verified with a probe or gauge.

Example: Aligning a flexible coupling without intermediate sleeve or gear rim.

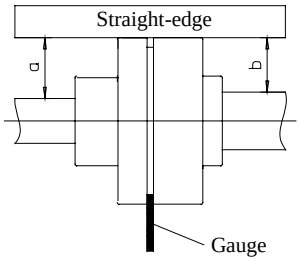

The deviation between the two coupling halves should not exceed 0.3 mm either radially or axially. This must also be ensured at operating temperature and with supply pressure applied.

5.3.2 Coupling guard

In accordance with the accident prevention regulations, the pump may be operated only with a coupling guard. If this coupling guard is not supplied by us, at the express request of the orderer, the operator must provide such a guard.

5.4 Electrical connection

The electrical connection must be made by a qualified electrician in accordance with the applicable safety regulations. Please refer to the Installation Instructions and Operating Manual provided by the motor manufacturer. Please refer to the Installation Instructions and Operating Manual of the equipment manufacturer for safety facilities and control equipment.

5.5 Pipes

5.5.1 Purging

The suction and delivery connection of the pump are sealed with plastic caps. The pump interiors still contain residual quantities of the testing oil or, possibly, a preservation agent. If contractually agreed, pumps are also cleaned by us after the trial run. These pumps are then entirely free of such residue.
Should the pump be purged before initial commissioning, we recommend using either the medium to be pumped or a neutral agent for this purpose. Please do not use water or fluids containing water since this could entail the risk of corrosion, apart from on pumps made of high-grade steel or stainless steel.

CAUTION Before the pump is installed in a new installation, the tanks, pipes and connections must be cleaned thoroughly, flushed through and blown through with compressed air. Welding beads, scale and other contamination frequently only become detached after a certain period. In order to prevent this, please take appropriate measures, such as sandblasting, before installation.

CAUTION Foreign bodies will endanger the operational reliability and safety of the pump and may lead to blockage or total failure.

5.5.2 Connecting pipes

On no account may the pump be used as a fixed support on long pipes. Long pipes must be supported directly ahead of the pump and must be connected free of strain. On no account may their weight be borne by the pump.

Elongation of the pipes resulting from temperature variations must be compensated for by suitable measures.

5.5.3 Additional connections

The dimensions and position of the additional connections required for the pump, e.g. for sealing, purging or leakage fluid, are specified in the installation and piping plan.

5.5.4 Suction line

In the case of short suction lines, the nominal diameter should be at least that of the pump connection. On longer pipes, determine the most economical nominal diameter in each individual case. Adapters for increasing to larger nominal diameters should be designed with as gentle an expansion angle as possible in order to reduce pressure losses.
The suction line should always be as short and straight as possible. The total suction-end resistance may not exceed 0.4 bar in operating condition. In start-up condition, it may be max. 0.65 bar for a period of up to approx. 30 min (until operating temperature is reached).
The total resistance comprises the geodetic suction head and the pipe resistance, including the resistance of any built-in fixtures and fittings. It is measured as a partial vacuum using a vacuum meter directly at the pump suction connection.
The flow velocity is a further characteristic parameter for the suction line. Always endeavour to achieve a value of 1...1.5 m/s for the flow velocity in the case of oil.
A partial vacuum greater than 0.4 bar impairs the pump's volumetric efficiency, thus reducing the delivery capacity and resulting in cavitation. Cavitation causes increasing noise and greater wear in the long term.
Installing a vacuum meter at the pump suction connection is particularly advisable for checking the partial vacuum in the suction line and assessing the degree of contamination of any suction filter installed.

CAUTION The suction line must be absolutely tight !

5.5.5 Delivery line

The operating or delivery pressure must be checked with a pressure gauge fitted directly at the pump delivery connection. The delivery pressure or total resistance comprises the individual resistances of the actuators, the geodetic pressure head and pipe resistances.

CAUTION Line and actuator resistances depend on viscosity. It is advisable to fit a pressure relief valve in order to avoid overloading the pump as the result of inadmissibly high pressure.
The flow velocity in the delivery line should not exceed 3 m/s in the case of oil.
Should there be air in the suction line, this may cause induction problems when starting the pump, e.g.:
- if the pump is to pump against a closed system (loaded non-return valve),
- if two pumps operating in parallel are mutually safeguarded by means of non-return valves.

The situation can be remedied by bleeding the delivery line or by a small bypass line (DN 4-6) upstream of the non-return valve. The bypass is then connected back to the tank.
On forced-circulation lubrication systems such as those conventional in gear construction, cleaning filters must be fitted in the delivery line.
The overall circulating volume of the lube oil must not be selected too low so that it does not overheat as the result of frequent pumping through the circuit and inadequate cooling. A cooler or heat exchanger must be provided if necessary.

5.5.6 Pressure test and leakage test

These tests must be conducted statically **before** the pump is installed. Special-purpose boiler and pipe test pumps must be used for this purpose. On no account may the feed pump be used !

CAUTION Test pressures generally lie substantially above the pump design pressure so that the pump could be damaged. (see also 5.5.1 Purging)

5.6 Protection against foreign bodies and contamination

A distinction is made between two types of contamination:

1. Primary contamination

- Filling and feed pumps are exposed to foreign bodies, dirt particles or mineral pigments which are located in the medium to be pumped.

- Pipe elements, in particular upstream of the pump, may be contaminated with fine dirt particles such as metal swarf, welding or soldering beads or abrasives etc. originating from production or installation.
  (see also 5.5.1 Purging)

2. Secondary contamination

Circulation pumps, e.g. for oil supply systems, are subjected to contamination which, after commissioning, forms continually in the sliding surfaces of the gear components as abrasion or abraded wear in the form of metallic particles and which can be entrained by the lube oil.
Gear pumps can be protected against primary contamination by coarse filters or plate-type filters fitted in the suction line.
Depending on the filter rating, these suction filters retain foreign bodies of a specific size.

CAUTION The filter clogs up gradually as the result of contamination and silting-up, thus impeding induction of the feed stream by the pump. This will be noticeable since the pump will become noisier.
(see also 8.4 Faults)
A filter rating of 0.05 to 0.13 mm is appropriate, depending on pump design. The larger the filter area, the longer will be the maintenance intervals.
Gear pumps are best protected against secondary contamination by means of changeover filters or double self-bypassing filters fitted in the delivery line and designed for continuous filtration. Whilst one filter chamber is in operation, the other is at standby. The filters can be equipped with visual differential pressure indicators or electrical contacts for remote monitoring in order to permit the increasing contamination of the filter to be recognised.
One of the other aspects which must be borne in mind when selecting the filter rating and size is the viscosity range of the lube oil. Consequently, the filter manufacturer should be consulted. Filter ratings of 25-60 µm are conventional for lube oils.

CAUTION Foreign bodies endanger the operational safety and reliability of the pump and may lead to blockage or total failure. Larger quantities of ultra-fine contamination will cause abrasion wear on the sliding surfaces and will reduce the service life of the pump.

6 Starting up / shutting down

6.1 Preparations for starting up

Before starting up, inspect the pump installation in order to establish that it is in proper working order as specified in the technical documentation.

In the case of electric motor-driven pumps, the electrical connections may be made only by a qualified electrician.

CAUTION Facilities for personal safety (e.g. contact guard on clutches and belts) must be fitted.

6.2 Initial commissioning

Ensure that there is adequate medium in the pump before initial commissioning.
Gear pumps are always self-priming pumps. Under normal circumstances, they may induct the air present in the suction line and convey it into the delivery line. It is advisable to also fill the suction line with the medium to be pumped before starting, particularly in the case of extremely unfavourable suction conditions, in order to prevent the pump running dry.

CAUTION Fill the pump and, wherever possible, also the suction line with the fluid to be pumped and then bleed.

Always avoid the pump running dry!
Should there be shut-off elements in the suction or delivery line, these elements must be opened fully. Fully open all additional connections provided, e.g. for sealing or purging fluid etc., and check flow.

Heavy pumps generally have an eyebolt for attaching load suspension devices at the topmost point on the casing. There may be a screw plug at this point on small pumps. Depending on the particular design, the eyebolt is located either in a tapped blind hole or in a through-hole with thread. The latter offers the option of filling or bleeding the pump.

CAUTION Check the direction of rotation. Each pump features a direction-of-rotation arrow. If the pump is operated in the wrong direction, this could entail the risk of overloading the shaft seal and causing it to leak. Pumps suitable for clockwise and counter-clockwise rotation are exceptions to this rule.
The direction of rotation can even be checked with the pump full and with the shut-off elements open by briefly switching the drive on and off.

CAUTION Gear pumps are positive-displacement pumps.
If the pump pumps into a closed delivery line, it will be overloaded and fail.

Pressure relief valves protect pumps against damage and overload (see also 4.4.1 Pressure relief valve).

Proper functioning of the pump can be checked by listening to the noise and by checking the pressure gauge. The time taken from switching on to pumping should not exceed 30 seconds.

6.3 Placing back into operation

In principle, the same procedure as that described in Point 6.2 Initial commissioning must be noted in this case.
If the pump has been placed out of operation for a long period, please check that there is still adequate fluid in the pump in order to ensure reliable re-induction.

CAUTION Check the mobility of the internal components of the pump in the case of media which could set (e.g. by turning the drive shaft).

CAUTION On no account may a cold pump be started up suddenly with a hot medium. The temperature of the pump must be increased slowly in order to avoid seizing of the pump as the result of thermal shock.

6.4 Shutting down

Depending on the particular system, the pump should be allowed to idle for an adequate period - *with the heating source switched off* - until the pumped fluid's temperature has dropped to such an extent as to avoid heat build-up in the pump.
Close the shut-off element in the supply line if the pump has been out of operation for a long period.
Close off additional connections.

The shaft seal must be supplied with sealing fluid even when at standstill on pumps in which the pumped fluid is supplied under vacuum.

Media which set should be drained off. The pump can be used at most only briefly and at low purging pressure in order to clean the pipe system.

CAUTION The intention to use the pump as a purging pump must be known when designing the pump in order to ensure material compatibility.
High purging pressures and long operating times should be avoided in the case of purging or cleaning fluids with poor lubrication properties owing to the risk of jamming or seizing on the sliding surfaces of the pump.

7 Maintenance / repair

7.1 General information

Steimel gear pumps largely require no maintenance under normal operating conditions if they are operated with media having good lubrication properties.

It is advisable to regularly check the performance data. Integration of corresponding monitoring devices, such as operating hours counters, pressure gauges, pressure and temperature monitors etc., will depend on the requirements and the relevant regulations.

Please note the following points when carrying out maintenance work on the overall system:

- Check that all securing screws, bolts and connections are tight and retighten if necessary.

- Check alignment of the coupling. Examine elastomers for wear.

- Check the pump for leaks, in particular the shaft seals.

7.2 Shaft seal

7.2.1 Stuffing box packing

The stuffing box gland nut may be tightened only lightly so that the packing allows slight leakage during operation, thus dissipating the frictional heat.

If the leakage rate is too high after a long operating period, tighten the nuts on the stuffing box gland uniformly by 1/6 of a turn. Then observe the leakage. If it is no longer possible to tighten the stuffing box gland nut, you must fit an extra packing ring. It is generally not necessary to replace the entire packing assembly.
Should it be necessary to renew the packing assembly nevertheless, also assess the condition of the shaft bearing assembly and the seal seat.
If there are signs of major scoring on the shaft, the shaft must be exchanged since, otherwise, this will impair sealing with new packing rings.

The joints of the packing rings or cut ring sections must be mutually offset by approx. 90°.
The joint should be at the top on the last ring at the gland end.
The packing rings must be carefully bent open both axially and radially only sufficiently to permit them to just be slid over the shaft.

7.2.2 Axial face seal / rotary shaft seal

Maintenance of the axial face seal is restricted to occasionally checking for leaks.
Very slight leakage of the axial face seal is permitted.
Should the leakage be higher than this, the axial face seal must be renewed. When doing this, also inspect the pump bearing assembly.

The rotary shaft seal requires no maintenance either. Should it leak, it must be renewed.

7.2.3 Twin seals

On twin seals and combined seals, the quench fluid level in the recipient must be checked constantly and topped up if necessary.

7.2.4 Pressure relief valve

Please follow the steps below should it be necessary to regulate / adjust the opening pressure of the pressure relieve valve:

- Unscrew the pressure cap and undo the lock nut.

- The required opening pressure can be set by turning the threaded bushing / regulating screw which is then accessible.
  Turning clockwise: *increases the opening pressure*.
  Turning counter-clockwise: *reduces the opening pressure.*
  Recommended values for pressure setting: approx. 10 % above the operating pressure / working pressure of the system.

- Screw the pressure cap back on (do not forget the sealant).

7.3 Dismantling and re-assembly

7.3.1 Basic instructions

The unit must be safeguarded so that it cannot be switched on before starting dismantling work.
The shut-off elements in the supply and delivery line must be closed. The pump must have reached ambient temperature.

7.3.2 Dismantling the unit

1. Disconnect the electrical power supply
2. Remove any fitted additional connections

3.: Unit on sub-plate:

3.1. Remove the coupling guard
3.2. Disconnect the motor terminals
Detach the motor from the sub-plate
3.3. Disengage the pump and motor
3.4. by moving the motor's position
3.5. Detach the suction and delivery connection
3.6. Detach the pump from the sub-plate

4.: Unit with pump support / intermediate bracket:

4.1. Disconnect the motor terminals
4.2. Detach the motor
4.3. Detach the suction and delivery connection
4.4. Detach the pump from the pump support / intermediate bracket

7.3.3 Dismantling the pump

Please refer to the various exploded views (if available).
Identify the position of the pump components and number them consecutively!

1. Undo the casing bolts
2. Release the counter-cover from the casing using 2 forcing threads and hexagon bolts
3. Pull the counter-shaft with gear wheel out of the pump casing
4. Release the safety catch on the coupling half and detach it with an extractor tool and then detach the feather key

5 . Version with packing:

5.1. Undo the gland stuffing box

6. Direction of rotation-dependent axial face seal:

6 1. Pull out the axial face seal

7. Direction of rotation-independent axial face seal:
(Please refer to the special Installation Instructions and Operating Manual)

8. Version with single thrust bearing:

8.1. Detach the bearing catch

9. Version with rotary shaft seal:

9.1. Detach the seal locating cover

10. Pull the drive shaft with gear wheel out of the pump casing
11. On pumps with bearing components made of carbon / ceramic material, always ensure that you take great care when dismantling!
Use absolutely no force since these components are fragile and could fracture.

7.3.4 Assembling the pump / unit

Follow the generally valid rules applicable in the field of mechanical engineering and machine construction when re-assembling.
O-rings must be inspected for damage and must be replaced by new O-rings if necessary.

Flat gaskets must always be renewed. Ensure that the new gasket has precisely the same thickness as the old gasket.
Hylomar SQ 32/M or Epple 33 for instance may be used as permanently elastic universal seals.
All seal and gasket residue must be removed completely. When re-assembling, follow the reverse procedure to that followed when dismantling.

- Stuffing box packing, see Point 7.2.1
- Rotary shaft seal
  - Always use new rotary shaft seals.
  - Always ensure that they are fitted in the correct position.
  - The sealing edge of the new ring should not be at the position of the sealing edge on the old ring.
  This can be achieved by:
  - exchanging the shaft or shaft bushing
  - fitting with a spacer ring
  - pressing in to different depths in the location hole.
  - Use a press-in tool and a suitable press-in die when pressing in.
  - *Make sure that you do not damage the sealing lip at sharp edges when sliding into the shaft!*
  - On smooth shafts, round off the keyways and turned grooves. Fitted shafts should have a conical bevel. If this is not possible, an installation sleeve must be used to assist in assembly.
- Axial face seal

please refer to the special Installation Instructions and Operating Manual

- Pressure relief valve
  please refer to Point 7.2.4

7.4 Spare parts

Keeping a stock of the most important spare parts and parts subject to wear at the installation site is an important precondition for ensuring that the pump is always ready for operation.
On the other hand, we recommend that you keep in stock a reserve pump and return the removed pump to our works for repair if necessary.

Please refer to our spare parts list with cutaway view when ordering spare parts.

We are able to assume warranty only for original spare parts supplied by us.

It must be expressly pointed out that spare parts and accessories not supplied by us are not tested by us and are not approved by us. Installation and/or use of such products may thus impair design characteristics of the pump and thus endanger active and/or passive safety. We are unable to accept liability and accept claims under warranty for damage and loss occurring as the result of using non-original spare parts and accessories.

Please state the following information when submitting orders for spare parts:

- Contract No. / Serial No.
- Part No.
- Quantity

8 Related documents

Please refer to the technical data sheet or the sales order confirmation for the related documents.

FAULTS; CAUSES AND REMEDIES

Faults								Cause	Remedy	
Pump not inducting	Pump delivery rate too low	Irregular pumping	Pump overheating	Sound pressure level too hig	Valve cone chattering	Motor overheating	Pump seizes up			
a	b	c	d	e	f	g	h			
→								Incorrect direction of rotation	Check direction of rotation as shown by arrow on pump; reverse polarity of motor if direction of rotation is incorrect	1
→	→			→			→	Pump not filled Fluid seal inadequate	Fill and bleed pump and, if necessary, suction line	2
→	→			→				- Suction line leaking - Shaft seal leaking - Screw plugs on pump leaking - Pressure cap on pressure relief valve missing or leaking	- Seal in suction line again - Renew shaft seal - Tighten screw plugs or seal them in again (possibly eyebolt) - Screw on and tighten pressure cap with seal	3
→	→			→				- Suction head excessive / inflow inadequate; Suction filter clogged or too small - Internal parts worn	- Check suction head / resistance and, if necessary, increase the line cross section or shorten the length of the line - if necessary, clean suction filter or fit a larger suction filter - Renew worn parts	4
→								No bleed facility in the delivery line Inducting against non-return valve	Install small bypass line (DN 4) with return line into the oil tank upstream of the nonreturn line. Alternatively: attach bleed cock	5
→	→	→						- Partial flow via pressure relief valve, valve cone jamming - Suction and delivery line clogged	- Remove valve cone and remachine it or renew it - Clear clogging or deposits	6
				→	→			- Valve spring operating in resonance range - Valve cone beating against seat	- Fit new valve spring - Adjust the opening pressure	7
	→	→						Pressure relief valve opening too early	Set pressure relief valve to a higher value (10% above operating pressure) Renew valve spring if it is slack	8
				→				- Gearwheels running unstably - Construction/mounting not noise-optimised	- Load pump at 1-2 bar in the case of unpressurised pumping of thin-bodied media - Isolate structure-borne noise by vibration dampers, provide acoustic hoods	9
	→	→		→				Air inclusions in circulation system Inadequate bleeding Pumped medium frothing	Return lines must enter the tank below the oil level, lay suction and return connections further apart in the tank, increase bleed area / oil level area	10
	→	→		→				Volumetric efficiency of pump too low / viscosity too high	Reduce the speed of rotation when pumping highly viscous media	11

FAULTS; CAUSES AND REMEDIES

Faults								Cause	Remedy	
Pump not inducting	Pump delivery rate too low	Irregular pumping	Pump overheating	Sound pressure level too hig	Valve cone chattering	Motor overheating	Pump seizes up			
a	b	c	d	e	f	g	h			
								- Delivery pressure too high	- Reduce pressure / increase size of delivery line / reduce resistances	
								- Speed of rotation too high	- Reduce speed of rotation	
								- Defective bearing	- Inspect bearing assembly and repair it	
			→					- Plain bearings overloaded owing to inadequate lubricatior	- Improve bearing lubrication [1]	12
								- Inadequate viscosity of pumped medium	- Reduce temperature	
								- Unit poorly aligned	- Align unit	
								- Stuffing box packing overtightened	- Slacken stuffing box gland nut	
								- Power consumption too high	- Compare voltage and frequency with motor rating plate, install higher-power motor, reduce speed of rotation	
	→					→		- Running on 2 phases	- Repair motor or renew defective fuse	13
								- Inadequate cooling	- Improve cooling air supply	
								- Excessive viscosity of pump medium	- Heat medium to be pumped / install additional heater	
				→				- Motor bearing assembly defective	- Repair bearing assembly	
							→	Foreign bodies in pump	Dismantle pump and remove any foreign bodies, smooth damaged points with oilstone / install a filter	14
							→	Seized bearing assembly	Check whether the material has lost its lubricating properties owing to excessively high temperature Dismantle pump and repair it; return pump to works if necessary	15
									1) Please enquire with us	

ENGLISH

Information on safety and commissioning for low voltage asynchronous motors

(in accordance with L. V. directive 73/23/EEC)

Types: 5AP, 6AP,C,F,16BA,7BA,7AA

Shaft height: 56 to 315 mm

1 General information

Electric motors have dangerous voltage-carrying and rotating components as well as surfaces that may become hot. All work involved in the transport, connection, commissioning and regular maintenance must be carried out by **qualified, responsible specialists** (note VDE 0105; IEC 364). Improper behaviour may result in serious **injury** and **damage to property**. The applicable **national, local** and **works regulations** and **requirements** must be complied with.

2 Intended use

These motors are intended for commercial installations. They comply with the harmonized standards of the **EN60034 (VDE 0530)** series. Utilization in areas subject to **explosion hazard is not permitted**, unless **expressly intended** for this purpose (see additional notes). In certain special cases, for example, on use in non-commercial installations, if requirements are more strict (e.g. protection against contact with children's fingers), it is the responsibility of the customer to ensure compliance on installing the equipment.
The motors are rated for ambient temperatures of **-20°C to +40°C** and site altitudes ≤ **1000 m** above sea level. Any contradictory information on the rating plate **must** be observed. The conditions on site **must** correspond to all rating plate specifications.

> Low voltage motors are **components** for installation in machinery in terms of the Machine directive 89/392/EEC. **Commissioning** must not take place until it has been proved that the end product conforms with this guideline (please note EN 60204-1).

3 Transport and storage

Any **damage** detected after dispatch should be reported immediately to the transport company and **commissioning** must be postponed. Tighten the eyebolts. They are designed for the weight of the motor only therefore do not attach any additional loads. If necessary, use suitable, adequately dimensioned transporting equipment (e.g. rope guides).
Remove existing **shipping braces** before commissioning; and reuse for subsequent transport. If motors are stored, a **dry**, **dust-free** and **low vibration** (v_{rms} ≤ 0.2 mm/s) environment is important (to avoid bearing standstill damage). On long-term storage, the regrease interval of the bearings is reduced.
Before commissioning, measure the impedance of the insulation. If values ≤1kΩ per volt of rated voltage are measured, the windings must be dried out.
When motors with roller bearings for increased cantilever force are operated the value of cantilever force must be minimal 30% of permissible cantilever force (see catalogue). Operating with smaller cantilever force is the cause of bearing faults.

4 Installation

Ensure an even underlying surface, good foot or flange fixing and precise alignment for direct coupling. It is important to ensure that the mounting conditions do not cause resonance with the rotational frequency and the doubled supply frequency. Turn the rotor **by hand** and listen for any unusual grinding noises. **Check** the **direction of rotation** in the decoupled state (note section 5).
Only mount or remove drive components (belt pulley, coupling, etc.) using suitable tools (heat up), and cover to shield against contact. Avoid unpermissible belt tensions (see catalogue and technical data).
The **balancing type** is specified on the shaft end face or rating plate (**H** = half- and **F** = full-key balancing). On mounting the drive, note the balancing type! In the case of half key balancing, the **protruding, visible part** of the half-featherkey must be removed.
A canopy is recommended for designs with the shaft end pointing downwards, and with the shaft end pointing upwards a cover must be **provided by the customer** to prevent foreign bodies from falling into the fan.

Do not obstruct ventilation! Discharged air, also from neighbouring equipment, must not be sucked in again immediately.
Checking of bearing grease must be carry out when motors are longer than 12 months storaged. When storage conditions are the cause of grease depreciation (presence of condensate, consistency change) the grease must be exchanged. Grease exchangr must be carry out no later than in three year interval.

5 Electrical connection

Work is only permitted to be carried out by **qualified specialists** on the **stationary motor**, while **disconnected** and **prevented from being switched on again**. This also applies for the auxiliary power circuits (e.g. Anti-condensation heaters).

Check that the equipment is potential-free!

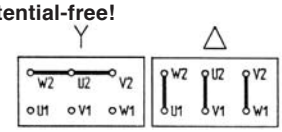

If the **tolerance limits** are exceeded that are specified in **EN 60034, part 1 / IEC 34-1** (voltage ± 5%, frequency ± 2%, shape of curve, symmetry) the heating effect is increased and the electromagnetic compatibility is affected. Please note the specifications on the rating plate and the connection diagram in the terminal box.
Connections must be made in such a way as to ensure that a **permanently** safe electrical connection is maintained (no protruding wire ends); use the corresponding cable end pieces. Create a **safe earth continuity connection**.

Tightening torques for terminal board connections

	Thread Ø	M4	M5	M6	M8	M10	M12	M16
	Tightening torque [Nm]	0,8.. ..1,2	1,8.. ..2,5	2,7.. ..4	5,5.. ..8	9.. ..13	16.. ..20	36.. ..40

Clearences in air between bare live parts themselves and between bare live parts and earth must be ≥ 5,5 mm (U_{rated} ≤ 690 V) .

It must be ensured that the terminal box does not contain **foreign** bodies, dirt or humidity. Seal any unused cable entry openings against **dust** and **water**.
Secure the **featherkey** on test operation without drive components. For motors with brakes, check that the brakes are operating perfectly before commissioning.

6 Operation

Vibration levels of v_{rms} ≤ 3.5 mm/s (P_N ≤ 15 kW) or v_{rms} ≤ 4.5 mm/s (P_N > 15 kW) are quite acceptable in the coupled state.
If deviations from normal operation occur - e.g. **increased temperatures, noises, vibration** - the motor should be **switched off** in the event of doubt. Determine the causes and contact the manufacturer if necessary. Do not disconnect protective equipment, even under test operation.
Under dirty operating conditions, clean the air channels regularly. Open any closed **condensate water** holes from time to time!

For motors **without regreasing facilities**, bearing or grease replacement must be carried out in accordance with the manufacturer's instructions, or after 3 years, whichever is sooner.
Bearings **with regreasing facilities** must be regreased when the motor is running.
In the case of **motors with separate ventilation**, the separately-driven fan must be switched on throughout motor operation.

7 Further information

Information provided about any additional equipment must be noted!

These notes on safety and commissioning must be retained for future reference!

SIEMENS

BG 225 S, M ≙ BG 200 L

Drehstrommotoren

Three-Phase Motors
Moteurs triphasés
Motores trifásicos
Motori trifasi
Trefasmotorer

1LA5 1LB5 1LC5 1LP5 1PP5 1LA9 1LP9 1PP9
1MA5 *1MF5*

Betriebsanleitung/Instructions

Bestell-Nr./Order No.: 610.42348.21.a

Ausgabe / Edition: 1.94

DEUTSCH / ENGLISH / FRANÇAIS / ESPAÑOL / ITALIANO / SVENSKA

Baugrößen (BG)
Frame sizes (BG)
Désignation de carcasse (BG)
Tamaños constructivos (BG)
Grandezze (BG)
Storlekar (BG)

BG 100L ... 112M

1LA5 IM B3

BG 132S ... 160L

1LA5 IM B3

BG 180M ... 200L

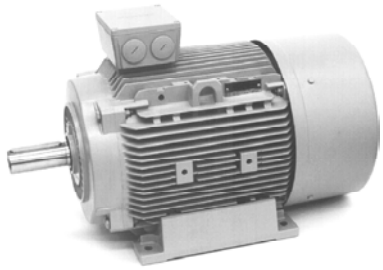

1LA5 IM B3

Bauformen / Types of construction / Formes de construction / Formas constructivas / Forme costruttive / Monteringssätt

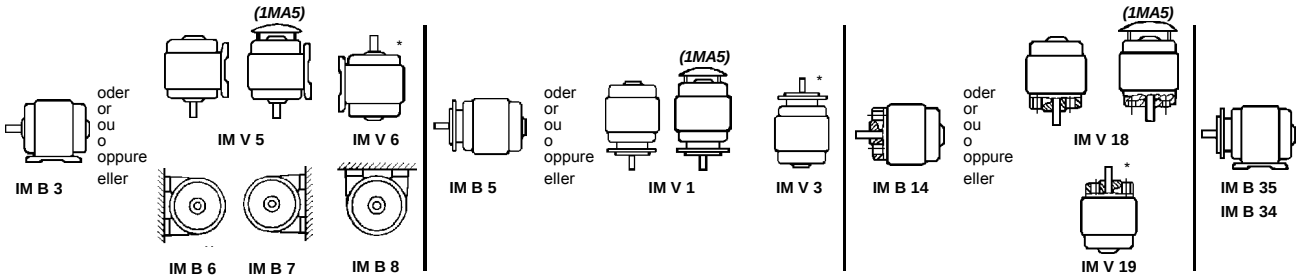

Fig. 1

** s. "4 EEx e Motoren" / see "4 EEx e motors" / voir "4 Moteurs EEx e " / véase "4 Motores EEx e "/ cfr. "4 Motori EEx e " / se "EEx e-Motorer"*

Alle Rechte vorbehalten. All rights reserved.
Tous droits réservés. Reservados todos los derechos.
Tutti i diritti riservati. All rätt förbehålles.

DEUTSCH

Allgemeine Hinweise

⚠ WARNUNG Zu beachten sind die Angaben und Anweisungen in allen gelieferten Betriebs- und sonstigen Anleitungen. Dies ist zur Vermeidung von **Gefahren** und **Schäden** unerläßlich!
Eine zusätzliche Sicherheitsinformation (gelb) liegt bei, die ergänzende Angaben zur Sicherheit für elektrische Maschinen enthält. Diese Sicherheitsinformation ist deshalb eine Ergänzung für alle weiteren noch gelieferten Betriebs- und sonstigen Anleitungen.

Weiterhin sind die jeweils geltenden **nationalen, örtlichen** und **anlagespezifischen Bestimmungen und Erfordernisse** zu berücksichtigen!

Sonderausführungen und **Bauvarianten** können in technischen Details abweichen! Bei eventuellen Unklarheiten wird dringend empfohlen, unter Angabe von **Typbezeichnung und Fabriknummer** beim Hersteller rückzufragen, oder die Instandhaltungsarbeiten von einem der SIEMENS - Servicezentren durchführenzulassen.

HINWEIS: Fig. 2 ... (Ersatzteile) s. Anhang auf Seite 16

1 Beschreibung

1.1 Anwendungsbereich

Die Motoren können in staubiger oder feuchter Umgebung aufgestellt werden. Die Isolierung ist tropenfest. Bei sachgemäßer Lagerung oder sachgemäßer Aufstellung im Freien sind normalerweise gegen Witterungseinflüsse keine besonderen Schutzmaßnahmen an den Motoren notwendig.

Meßflächenschalldruckpegel bei 50Hz (DIN EN 21 680 Teil 1)
1LA5, *1MA5* ca. 51 bis 76 dB(A)

1.2 Aufbau und Arbeitsweise

1LA5-, 1LA9-, 1LB5-, 1LC5- und *1MA5*-Motoren sind eigengekühlt (mit Lüfter). 1PP5- und 1PP9-Motoren sind eigengekühlt entweder - z. B. beim Einsatz als Lüftermotoren - durch einen auf dem Wellenende angeordneten Sonderlüfter, oder durch Fremdlüfter. 1LP5-, 1LP9- und *1MF5*-Motoren sind selbstgekühlt (ohne Lüfter).
Bei Fußmotoren sind die Füße bei den Baugrößen 100L und 112M am Motorgehäuse angegossen, bei den Baugrößen 132S bis 200L an das Motorgehäuse angeschraubt (s. Fig. 2).

Ein Umsetzen der Füße am Motorgehäuse, z. B. zwecks Veränderung der Klemmenkastenlage (s. Fig. 5), ist daher nur bei den Baugrößen 132S bis 200L möglich. Bei BG180M ... 200L sind nachträglich Gewinde in die vorhandenen Bohrungen am Motorgehäuse zu schneiden, um die Motorfüße zu befestigen. Allerdings müssen anschließend die Fußstandflächen durch Nacharbeit wieder in eine Ebene gebracht und bei Bedarf unterlegt werden.
Bei 1LC5-Motoren ist zusätzlich die Bremsenbetriebsanleitung mit zu beachten!

© Siemens AG 1991

2 Betrieb

⚠ WARNUNG **Alle Arbeiten nur im elektrisch spannungslosen Zustand der Anlage durchführen.**

2.1 Transport, Lagern

Beim Transport sind alle vorhandenen **Hebeösen** am Motor zu benutzen!

⚠ WARNUNG **Zum Transport von Maschinensätzen (z. B. Getriebe-, Gebläseanbauten, ...) nur die dafür vorgesehenen Hebeösen bzw. -zapfen benutzen! Maschinensätze dürfen nicht durch Anhängen an den Einzelmaschinen gehoben werden! Auf Tragfähigkeit dieser Hebeeinrichtung achten!**

Die **Wälzlager** sollten neu gefettet bzw. erneuert werden, wenn die Zeit von der Lieferung bis zur Motorinbetriebnahme bei günstigen Bedingungen (Aufbewahrung in trockenen, staub- und erschütterungsfreien Räumen) mehr als 4 Jahre beträgt. Bei ungünstigen Bedingungen verringert sich diese Zeit wesentlich.

Ggf. ist der Isolationswiderstand der Wicklung zu überprüfen, s. Abschnitt 2.5 .

2.2 Aufstellung

Eingeschraubte Hebeösen sind nach dem Aufstellen festanzuziehen oder zu entfernen!

Bei **Motoren mit Wellenende nach oben oder unten** (z.B. IMV5, IMV6 - s. Fig. 1) muß gewährleistet sein, daß kein Wasser in das obere Lager eindringen kann.

Das **Klemmenkastenoberteil** kann bei einem Klemmenbrett mit 6 Anschlußklemmen um 4x90 Grad und bei einem Klemmenbrett mit 9 Anschlußklemmen um 180 Grad gedreht werden.

Laufruhe
Stabile Fundamentgestaltung oder An- und Einbauverhältnisse, genaues Ausrichten der Motoren sowie ein gut ausgewuchtetes Abtriebselement sind Voraussetzung für einen ruhigen schwingungsarmen Lauf. Z. B. sind dünne Bleche unter die Füße zu legen, um ein Verspannen der Motoren zu vermeiden oder ggf. kann ein komplettes Auswuchten des Läufers mit dem Abtriebselement erforderlich sein.

2.3 Wuchtung, Abtriebselemente

Das Auf- und Abziehen von Abtriebselementen (Kupplungen Riemenscheiben, Zahnrad, ...) ist mit einer geeigneten Vorrichtung auszuführen (Fig. 7).

Standardmäßig sind die Läufer mit einer vollen Paßfeder dynamisch ausgewuchtet.
Ab Fertigung 1991 ist die Art der Auswuchtung am AS-Wellenende (Wellenstirnseite) markiert:
(**F =** Auswuchtung mit **voller** Paßfeder)
(**H =** Auswuchtung mit **halber** Paßfeder - Sonderausführung)

Bei Montage des Abtriebselementes auf entsprechende Auswuchtart achten!

Auswuchtung mit halber Paßfeder
Bei Abtriebselementen mit einem Längenverhältnis von Nabenlänge l zur Länge des Wellenendes l_M < 0,8 und Drehzahlen > 1500/min können Laufruhestörungen auftreten (s. Fig. 8).
Ggf. ist eine Nachwuchtung vorzunehmen, z. B. ist der aus dem Abtriebselement und über der Wellenkontur herausragende Teil der Paßfeder T_P abzuarbeiten.

⚠ WARNUNG **Zu beachten sind die allgemein erforderlichen Maßnahmen für den Berührungsschutz der Abtriebselemente.**

Wird ein Motor ohne Abtriebselement in Betrieb genommen, so ist die Paßfeder gegen Herausschleudern zu sichern.

2.4 Elektrischer Anschluß

Netzspannung und Netzfrequenz müssen mit den Daten auf dem Leistungsschild übereinstimmen. ±5% Spannungs- oder Frequenzabweichung *(1MA5/1MF5 ±3% Frequenzabweichung)* sind ohne Leistungsherabsetzung zulässig. Anschluß und Anordnung der Schaltbügel nach dem im Klemmenkasten befindlichen Schaltbild vornehmen. Schutzleiter an diese Klemme ⏚ anschließen.

Bei Anschlußklemmen mit Klemmbügeln (z. B. nach DIN 46282) sind die Leiter so zu verteilen, daß auf beiden Stegseiten etwa gleiche Klemmhöhen entstehen. Diese Anschlußart erfordert daher, daß ein einzelner Leiter U-förmig gebogen werden muß oder mit einem Kabelschuh anzuschließen ist (s. Fig. 3.1). Dies gilt auch für den Schutzleiteranschluß und den äußeren Erdungsleiter (s. Fig. 3.2) - grüngelb .

Anziehdrehmomente für Schraubenverbindungen der elektrischen Anschlüsse - Klemmenbrettanschlüsse (außer Klemmenleisten) s. Fig. 4.

2.5 Überprüfung des Isolationswiderstandes

Vor der Erstinbetriebnahme des Motors, nach längerer Lagerung oder Stillstandzeit (ca. 6 Monate), muß der Isolationswiderstand der Wicklungen ermittelt werden.

⚠ WARNUNG **Bei und unmittelbar nach der Messung haben die Klemmen teilweise gefährliche Spannungen und dürfen nicht berührt werden.**

Isolationswiderstand
- Der **Mindestisolationswiderstand** von neuen, gereinigten oder instandgesetzten Wicklungen gegen Masse beträgt 10 MegaOhm.
- Der **kritische Isolationswiderstand R_{krit}** wird zunächst errechnet. Berechnung erfolgt durch Multiplikation der Bemessungsspannung U_N, z. B. AC 0,69 kV, mit dem konstanten Faktor (0,5 MegaOhm/kV):
  R_{krit} = 0,69 kV * 0,5 MegaOhm/kV = 0,345 MegaOhm

Messung
Der **Mindestisolationswiderstand** der Wicklungen gegen Masse wird mit 500 V Gleichspannung gemessen. Dabei soll die Temperatur der Wicklungen 25°C ± 15°C betragen.
Der **kritische Isolationswiderstand** ist bei Betriebstemperatur der Wicklung mit 500 V Gleichspannung zu messen.

Überprüfung
Ist bei neuer, gereinigter oder instandgesetztem Motor, der längere Zeit gelagert wurde oder still stand, der **Mindestisolationswiderstand** der Wicklung gegen Masse kleiner 10 MegaOhm, kann die Ursache hierfür Feuchte sein. Die Wicklungen sind dann zu trocknen.

Nach längerer Betriebsdauer kann der **Mindestisolationswiderstand** auf den **kritischen Isolationswiderstand** absinken. Solange der gemessene Wert den errechneten Wert des **kritischen Isolationswiderstandes** nicht unterschreitet, darf der Motor weiter betrieben werden. Wird dieser Wert unterschritten, ist der Motor sofort abzuschalten.
Es ist die Ursache hierfür zu ermitteln, ggf. sind die Wicklungen oder Wicklungsteile instand zusetzen, zu reinigen oder zu trocknen.

2.6 Inbetriebnahme

HINWEIS: Bei **stark ungleichförmigem Drehmoment** (z.B. Antrieb eines Kolbenkompressors) wird ein nicht-sinusförmiger Motorstrom erzwungen, dessen Oberschwingungen sowohl eine unzulässige Netzbeeinflussung als auch unzulässig hohe elektromagnetische Störaussendungen bewirken können.

Bei **Speisung durch Umrichter** können hochfrequente Strom- und Spannungsoberschwingungen in den Motorzuleitungen zu elektromagnetischen Störaussendungen führen. Deshalb wird die Verwendung abgeschirmter Zuleitungen empfohlen.

Vor Inbetriebnahme ist zu prüfen ob:
- die Mindestisolationswiderstände eingehalten sind
- der Läufer ohne anzustreifen gedreht werden kann
- der Motor ordnungsgemäß montiert und ausgerichtet ist
- die Abtriebselemente richtige Einstellbedingungen haben (z. B. Riemenspannung bei Riementrieb; ...) und das Abtriebselement für die Einsatzbedingungen geeignet ist
- alle elektrischen Anschlüsse sowie Befestigungsschrauben und Verbindungselemente nach Vorschrift angezogen und ausgeführt sind
- der Schutzleiter ordnungsgemäß hergestellt ist
- eventuell vorhandenen Zusatzeinrichtungen (Bremse, ...) funktionsfähig sind

- Berührungsschutzmaßnahmen für bewegte und spannnungsführende Teile getroffen sind
- die Grenzdrehzahl n_{max} (s. Leistungsschild) nicht überschritten wird;
  HINWEIS: Die Grenzdrehzahl n_{max} ist die höchste kurzzeitig zulässige Betriebsdrehzahl. Es ist zu beachten, daß sich hierbei das Geräusch- und Schwingungsverhalten des Motors verschlechtert sowie die Lagerwechselfrist verringert.

VORSICHT **Nach dem Anbau der Motoren ist die Bremse (falls vorhanden) auf ihre einwandfreie Funktion zu prüfen!**

Diese Aufzählung kann nicht vollständig sein. Zusätzliche Prüfungen sind gegebenenfalls nötig!

3 Instandhaltung

Sicherheitsmaßnahmen

WARNUNG **Vor Beginn jeder Arbeit am Motor oder Gerät, besonders aber vor dem Öffnen von Abdeckungen aktiver Teile, muß der Motor vorschriftsmäßig freigeschaltet sein. Neben den Hauptstromkreisen ist dabei auch auf eventuell vorhandene Zusatz- oder Hilfsstromkreise zu achten.**
Die üblichen "5 Sicherheitsregeln" lauten hierbei z. B. nach DIN VDE 0105:

- Freischalten
- Gegen Wiedereinschalten sichern
- Spannungsfreiheit feststellen
- Erden und Kurzschließen
- Benachbarte unter Spannung stehende Teile abdecken oder abschranken.

Diese zuvor genannten Maßnahmen dürfen erst dann zurückgenommen werden, wenn die Instandhaltungsarbeiten abgeschlossen sind und der Motor vollständig montiert ist.

HINWEIS: Sofern Motoren mit verschlossenen Kondenswasseröffnungen (z.B. Schutzart IP55 oder IP56, s. Leistungsschild) ausgeführt sind, müssen diese von Zeit zu Zeit geöffnet werden, damit eventuell angesammeltes Kondenswasser abfließen kann.

Kondenswasseröffnungen sind stets an der tiefsten Stelle des Motors anzuordnen!

Lagerwechsel, Fettsorte

Die Lagerwechselfrist ist unter normalen Betriebsbedingungen, bei waagerechter Motoraufstellung, Kühlmitteltemperatur bis 40°C und einer Motordrehzahl von

- 1500/min ca. 20 000 Betriebsstunden
- 3000/min ca. 10 000 Betriebsstunden.

Unabhängig von den Betriebsstunden sollte das Fett, wegen der Alterung, etwa alle 3 Jahre erneuert werden.

Bei besonderen Betriebsbedingungen, z. B. senkrechter Motoraufstellung, häufigem Betrieb bei der Grenzdrehzahl n_{max}, großen Schwingungs- und Stoßbelastungen, häufigem Reversierbetrieb, reduzieren sich die vorstehend genannten Betriebsstunden wesentlich.

Die Motoren haben Rillenkugellager mit einer Deckscheibe (ZC3 Ausführung).

Die Deckscheibe ist auf der dem Motorgehäuse (Ständer) zugewandten Lagerseite angeordnet.
HINWEIS: Beim Lagerwechsel ist auf die Anordnung der Deckscheibe zu achten, da bei Sonderausführungen die Anordnung von der Standardausführung abweichen kann!

Das Material der Scheiben sollte temperaturbeständig von -20°C bis +150°C sein, z. B. Polyacryl-Kautschuk (ACM).

Fettsorte bei Standardmaschinen: UNIREX N3 (Fa. ESSO); Ersatzfette müssen der DIN 51825-K3N genügen.
Sonderfette sind auf dem Leistungsschild angegeben.

Das Mischen von verschiedenen Fettsorten ist zu vermeiden!

Motor im erforderlichen Umfang zerlegen. Wälzlager mit geeigneter Vorrichtung abziehen (s. Fig. 6). Lagerstelle von Verunreinigungen säubern! Wälzlager reinigen bzw. erneuern und neu fetten.

Hohlräume der Wälzlager bündig mit Schmierfett füllen! Lagerdeckel bzw. Lagerschild bleibt ohne Fettfüllung, um eine Überfettung zu vermeiden.
Wälzlager gleichmäßig auf ca. 80-100°C erwärmen und aufziehen. Harte Schläge (z. B. mit einem Hammer, ...) sind zu vermeiden.

Eventuell abgenützte Dichtelemente (z. B. Wellendichtring, usw.), sind ebenfalls zu erneuern.
Sind Radial-Wellendichtringe ohne Feder eingebaut, so muß auch das Ersatzteil ohne Feder eingesetzt werden.

Nachschmiereinrichtung
Bei Motoren mit Nachschmiereinrichtung sind die Angaben auf dem Leistungsschild zubeachten!

Fugenabdichtung
Beim Zusammenbau von Maschinen der Schutzart IP 55 oder höher (s. Leistungsschild) müssen die blanken Montageflächen zwischen dem Motorgehäuse und den Lagerschilden durch eine geeignete, nicht aushärtende Dichtungsmasse abgedichtet werden z. B. Fluid-D.

Kunststofflüfter (BG180M ... 200L)
Kunststofflüfter haben jeweils zwei angegossene Zungen, die als Axialfixierung in die Ringnut der Welle einrasten. Vor dem Abziehen des Lüfters müssen die beiden Zungen ausgerastet und in dieser Position, z.B. durch eingeschobene Beilagen, provisorisch festgehalten werden. Die Lüfter haben in der Tragscheibe zwei Öffnungen zum Durchführen einer Abziehvorrichtung, die an der Nabe angreifen soll.
Die Öffnungen können bei Auslieferung mit einer dünnen Kunststoffhaut verschlossen sein.
Zum Abziehen wie auch zum Aufziehen muß grundsätzlich eine geeignete Vorrichtung verwendet werden. Hammerschläge sind hierbei unbedingt zu vermeiden.

4 *EEx e-Motoren 1MA5, 1MF5*

DIN EN 50014/VDE 0170/0171 Teil 1 und
DIN EN 50019/VDE 0170/0171 Teil 6

Für diese Motoren gelten ergänzend oder speziell die Informationen in kursiver Schrift!
**Bei Wellenende oben, z. B. Bauformen IMV3, IMV6, IMV19 (s. Fig. 1), ist bei 1MA5-Motoren eine Abdeckung anzuordnen, die ein Hineinfallen von Fremdkörpern in die Motorlüfterhaube verhindert (s. DIN EN 50014/ VDE 0170/0171 Teil 1, Abschnitt III,16.1). Sie darf die Kühlung des Motors durch seinen Lüfter nicht behindern.*
Die auf dem Leistungsschild angegebene Temperaturklasse des Motors muß mit der Temperaturklasse des möglicherweise auftretenden brennbaren Gases übereinstimmen. Jedem Motor muß ein Motorschutzschalter vorgeschaltet sein, der auf den Motorbemessungsstrom einzustellen ist und der bei festgebremstem Läufer innerhalb der auf dem Motorleistungsschild angegebenen Zeit t_E auslöst (Prüfung anhand der dem Motorschutzschalter beiliegenden Auslösekennlinie). Bei Dreieckschaltung muß ein Überlastschutz mit Phasenausfallschutz vorgesehen werden. Polumschaltbare Motoren benötigen für jede Polzahl einen eigenen Schalter.
Soll aber der Überlastschutz ausschließlich durch eine direkte Temperaturüberwachungseinrichtung mit Hilfe von Temperaturfühlern (s. DIN EN 50019/VDE 0170/0171 Teil 6, Anhang A-A1.b) vorgenommen werden so muß die Ausführung des Motors hierfür gesondert geprüft und bescheinigt sein.
Auf DIN 57165/VDE 0165 wird hingewiesen.
Reparaturen müssen in Siemens-Werkstätten durchgeführt oder von einem amtlich anerkannten Sachverständigen abgenommen werden.

General note

⚠ WARNING The data and recommendations specified in all the instructions supplied, and in all other related instructions, must always be observed in order to avoid **hazardous situations** and the **risk** of possible injury or damage.
These instructions are augmented by supplementary instructions (yellow), which contain additional information on the safety measures for electrical machines and devices. The latter instructions thus augment all submitted instructions and all other related instructions.

Furthermore, the **pertinent national, local** and **plant-specific regulations** and **requirements** should be kept in mind!

Special designs and **other versions** may vary in technical details! If in doubt, be sure to contact the manufacturer, quoting the **type designation** and **serial number**, or have maintenance work done by one of SIEMENS Service Centres.

NOTE: Fig. 2 ... (Spare Parts) see Annex page 16

1 Description

1.1 Application

The motors are suitable for operation in dusty and damp environments. The insulation is tropicalized. If they are properly stored or installed outdoors, special weatherproofing measures are not usually required.

Measuring-surface sound-pressure level at 50 Hz
(DIN EN 21 680 Part 1)
1LA5, *1MA5* approx. 51 to 76 dB(A)

1.2 Construction and mode of operation

1LA5, 1LA9, 1LB5, 1LC5 and *1MA5* motors are self-ventilated (with fans). 1PP5 and 1PP9 motors are self-ventilated either by separate fans arranged on the rotors, such as for service as fan motors, or by external fans. 1LP5, 1LP9 and *1MF5* motors are non-ventilated (without fans).

The feet on foot-mounted motors with frame sizes 100L and 112M are cast integrally with the frame. The feet on motors with frame sizes 132S to 200L are bolted onto the frame (see Fig. 2).

For this reason, rearranging the feet (such as for changing the position of the terminal box- see Fig. 5) is only possible on frame sizes 132S to 200L. With frame sizes 180M...200L, threads will also have to be cut in the existing drilled holes in the frame to receive the foot mounting screws. In such cases, however, the support faces of the feet may have to be remachined or provided with shims to ensure that the motor is level.
Where 1LC5 motors are concerned, please also observe the brake operating instructions.

2 Operation

⚠ WARNING **Before starting any work on the machine, be sure to isolate it from the power supply.**

2.1 Transport, storage

The motors should always be lifted at both **lifting eyes** during transport.

⚠ WARNING **For lifting machine sets (such as built-on gearboxes, fan units), always use the lifting eyes or lifting pegs provided! Machine sets may not be lifted by suspending the individual machines! Check the lifting capacity of the hoist!**

If, after delivery, the motors are stored for more than 4 years under favourable conditions (kept in a dry place free from dust and vibration) prior to commissioning, the bearings should be regreased.
Under unfavourable conditions, this period is considerably shorter.

If necessary, the insulation resistance of the winding should be checked, see Section 2.5.

2.2 Installation

After installation, **screwed-in lifting eyes** should either be removed or tightened down.

In the **case of motors with shaft end facing upwards or downwards** (such as IMV5, IMV6 - see Fig. 1), measures must be taken to ensure that no water can penetrate into the upper bearing.

In the case of **terminal boards** with 6 terminals, the top part of the terminal box can be turned through 4 x 90 degrees. For terminal boards with 9 terminals, it can be turned through 180 degrees.

Quiet running
Stable foundations or mounting conditions, exact alignment of the motors and a well-balanced transmission element are essential for quiet vibration-free running. If necessary, shims should be inserted under the motor feet to prevent strain, or the whole rotor and transmission element should be balanced.

2.3 Balancing, transmission elements

A suitable device should always be used for fitting and removing the transmission elements (coupling halves, pulleys, pinions) (Fig. 7).

As standard, the rotors are dynamically balanced with the complete featherkey inserted.

From 1991 onwards, the type of balance has been marked on the drive end of the shaft (shaft end face):
(**F** = balanced with **full** featherkey)
(**H** = balanced with **half** featherkey)
When fitting the transmission element, keep the type of balance in mind!

Balance with half featherkey
Poor running characteristics can arise in the case of transmission elements having a length ratio of hub length l to length of shaft end $l_M < 0.8$ and running at speeds of > 1500 rev/min (see Fig. 8). If necessary, re-balancing should be carried out, e.g. the part of the featherkey T_p that protrudes from the transmission element and above the shaft surface should be cut back.

⚠ WARNING **The usual measures should be taken to guard transmission elements from touch. If a motor is started up without transmission element attached, the featherkey should be secured to prevent it being thrown out.**

2.4 Electrical connection

Check to see that system voltage and frequency agree with the data given on the rating plate. Voltage or frequency deviations of ±5% (*for 1MA5/1MF5, frequency deviations of ±3%)* from the rated values are permitted without the necessity of derating the output. Connection and arrangement of the terminal links must agree with the diagram provided in the terminal box. Connect the earthing conductor to the terminal with the ⏚ marking.

Wherever terminal clips are used (for example, to DIN 46282), arrange the conductors so the clips are virtually level, i.e. not tilted when tightened. This method of connection means that the ends of single conductors must be bent in the shape of a U or be fitted with a cable lug (see Fig. 3.1). This also applies to the green-yellow protective earthing conductor and the outer earthing conductor (see Fig. 3.2).

Please refer to Fig. 4 for tightening torques for terminal bolts and nuts (except for terminal strips).

2.5 Checking the insulation resistance

The insulation resistance of the windings must be measured prior to initial startup of the machine, after long periods of storage or standstill (approx. 6 months).

⚠ WARNING **While the measurement is being taken and immediately afterwards, some of the terminals carry dangerous voltages and must not be touched.**

Insulation resistance
- The **minimum insulation resistance** of new, cleaned or repaired windings with respect to ground is 10 MOhm.
- The critical **insulation resistance** R_{crit} is calculated first by multiplying the rated voltage U_N, e.g. 0.69 kV AC, with the constant factor (0.5 MOhm/kV): R_{crit} = 0.69 kV * 0.5 MOhm/kV = 0.345 MOhm.

Measurement
The **minimum insulation resistance** of the windings to ground is measured with 500 V DC. The winding temperature should then be 25°C ± 15 °C.
The **critical insulation resistance** should be measured with 500 V DC with the winding at operating temperature.

Checking
If the **minimum insulation resistance** of a new, cleaned or repaired machine, which has been stored or at standstill for a prolonged period of time, is less than 10 MOhm, this may be due to humidity. The windings must then be dried.

After long periods of operation, the **minimum insulation resistance** may drop to the **critical insulation resistance**. As long as the measured value does not fall below the calculated value of the **critical insulation resistance**, the machine may continue in operation. If it does, the machine must be stopped immediately.

The cause must be determined, and the windings or winding sections repaired, cleaned or dried as necessary.

2.6 Commissioning

NOTE: Where the torque is very uneven (the drive of a piston-type compressor, for example), the inevitable result is a non-sinusoidal motor current, whose harmonics can lead to excessive system perturbation or excessive electromagnetic interference.

In the case of converter-fed motors, high-frequency current or voltage harmonics in the motor cables can give rise to electromagnetic interference. That is why the use of shielded cables is recommended.

Before commissioning, check that:
- The minimum insulation resistances are adhered to
- The rotor turns freely without rubbing
- The motor is properly assembled and aligned
- The transmission elements are correctly adjusted (e.g. belt tension) and the transmission element is suitable for the given operating conditions
- All electrical connections, mounting screws and connecting elements are properly tightened and fitted
- All protective conductors are properly installed
- Any auxiliaries that may be fitted (brakes) are in working order
- Touch protection guards are installed around moving and live parts
- The maximum speed n_{max} (see rating plate) is not exceeded.
  NOTE: The maximum speed n_{max} is the highest operating speed permitted for short periods. It should be kept in mind that motor noise and vibration are worse at this speed, and bearing life is reduced.

⚠ CAUTION **After motor installation, the brake, if fitted, should be checked for proper functioning.**

It is not possible to formulate a complete check list. Other checks may also be necessary!

3 Maintenance

Safety precautions

⚠ WARNING **Before starting any work on the motor or other equipment, particularly before opening covers over live or moving parts, the motor must be properly isolated from the power supply. Besides the main circuits, any additional or auxiliary circuits that may be present must also be isolated.**
The usual "5 safety rules" (as set forth in DIN VDE 0105) are:
- Isolate the equipment
- Take effective measures to prevent reconnection
- Verify equipment is dead
- Earth and short-circuit
- Cover or fence off adjacent live parts

The precautions listed above should remain in force until all maintenance work is finished and the motor has been fully assembled.

NOTE: Where motors are fitted with closed condense water openings (e.g. degree of protection IP55 or IP56, see rating plate), these should be opened from time to time to allow any accumulated condense water to drain away.
Condense water openings should always be at the lowest point of the motor!

Fitting new bearings, type of grease

Under normal operating conditions, with horizontally mounted motors and coolant temperatures of up to 40 °C, the bearings should be changed at intervals of:
- approx. 20,000 operating hours for speeds of 1500 rev/min
- approx. 10,000 operating hours for speeds of 3000 rev/min

Irrespective of the number of operating hours, the grease should be renewed every 3 years because of ageing.

In the case of motors operating under special conditions, such as vertical motor position, frequent operation at maximum speed n_{max}, heavy vibration, sudden load changes and frequent reversing operation, the bearing should be changed at considerably more frequent intervals than at the operating hours stated above.

The motors feature deep-groove ball bearings which are provided with a cover plate (ZC3 version).

The cover plate is arranged on that side of the bearing facing the frame (stator).

NOTE: Notice the cover plate arrangement when changing the bearings, because it can vary between standard and special motors!

The cover plate material should withstand temperatures from -20 °C to +150 °C, e.g. polyacryl-rubber (ACM).

Type of grease for standard machines: UNIREX N3 (Esso); synthetic greases must conform to DIN 51825-K3N.

Special greases should be indicated on the rating plate.

Avoid mixing different types of grease!

Dismantle the motor to the extent necessary. Pull off the bearing with a suitable device (see Fig. 6). Clean the journal! Clean the bearing, or obtain a new one, and pack it with fresh grease.

Pack the bearing cavities flush with grease! The cover plate or endshield is kept free of grease to prevent overgreasing.
Heat bearings evenly to about 80-100 °C and press on. Heavy blows (such as with a hammer, ...) should be avoided.

Any worn sealing elements (such as shaft sealing ring, etc.) should also be renewed.

If springless radial shaft sealing rings are used, the replacement sealing rings must also be of the springless type.

Regreasing device

In the case of motors with regreasing device, take note of the information given on the rating plate!

Joint sealing

When reassembling machines with degree of protection IP55 or higher (see rating plate), the bright surfaces of the joint between the motor frame and the endshields should be coated with a suitable non-hardening sealing compound, such as Fluid-D.

Plastic fan (frame sizes 180M ... 200L)

Plastic fans have two cast-on tabs that snap into the ring groove on the shaft to prevent axial movement. Before the fan is pulled off the shaft, these two tabs must be disengaged and held temporarily in that position, e.g. by inserting packing. In the disc at the root of the blades, there are two openings for the claws of an extractor whose central screw should press against the hub. On delivery, these openings may be covered by a film of plastic.
A suitable device should be used for pulling the fan off and pressing it back on. Hammer blows must be avoided.

4 EEx e motors 1MA5, 1MF5

DIN EN 50014/VDE 0170/0171 Part 1 and
DIN EN 50019/VDE 0170/0171 Part 6

The special information in italics applies to these motor versions!
**1MA5 motors mounted with the shaft extension pointing upwards, e.g. types of construction IM V 3, IM V 6, IM V 19 (see Fig. 1), must be fitted with a cover to prevent foreign particles from dropping into the fan cowl of the motor (see DIN EN 50014/VDE 0170/0171 Part I. Section III, 16.1). This cover must not impair effective motor ventilation by the shaft-mounted fan.*
The temperature class of the motor indicated on the rating plate must correspond to the temperature class of any combustible gas that is likely to occur. Each motor must be provided with a circuit-breaker which is set to the rated current of that motor and which, under locked-rotor conditions, trips within the t_E time stated on the motor rating plate (compare with the tripping characteristic supplied with the circuit-breaker). In the case of delta-connected motors, overload protection (including phase-failure protection) should be provided. Pole-changing motors require a separate circuit-breaker for each speed.
If, however, overload protection is to be provided only in the form of direct temperature monitoring based on temperature sensors (see DIN EN 50019/VDE 0170/0171 Part 6, Appendix A-A1.b), the motor design must be specially tested and certified for this.
See DIN 57165/VDE 0165.
Repairs must be carried out in Siemens workshops or inspected by an officially approved specialist.

FRANÇAIS

Remarque générale

ATTENTION Afin d'assurer la **protection des personnes** et d'éviter tout **dégât** matériel, il est impératif de respecter les indications contenues dans toutes les instructions de service et dans tous les autres éléments de documentation transmis avec le produit.
Les instructions jointes (sur papier jaune) contiennent des règles de sécurité applicables aux matériels électriques. Ces informations relatives à la sécurité doivent être utilisées en complément de l'ensemble de la documentation.

Toutes les **prescriptions** et **exigences nationales**, **locales** ou **spécifiques** à l'installation doivent être respectées.

Les machines de **réalisation spéciale** (version, forme de construction) peuvent différer quant aux détails techniques. En cas de doute à ce sujet, il est instamment recommandé de contacter l'agence Siemens compétente en indiquant la **désignation de type** et le **numéro de fabrication**, ou de recourir aux centres de S.A.V. Siemens pour effectuer les travaux de maintenance.

NOTA Fig. 2 ...(Pièces de rechange) voir appendice pages 16

1 Description

1.1 Domaine d'application

Les moteurs peuvent être installés en atmosphère poussiéreuse et humide. L'isolation est tropicalisée. Normalement, aucune mesure de protection particulière contre les intempéries n'est nécessaire si l'on entrepose correctement les moteurs ou si on les monte à l'extérieur selon les règles de l'art.

Niveau de pression acoustique à 50 Hz (DIN EN 21 680, fasc. 1)
1 LA5, *1MA5* env. 51 à 76 dB(A)

1.2 Constitution et mode de fonctionnement

Les moteurs 1LA5 et 1LA9, 1LB5, 1LC5 et *1MA5* sont autorefroidis (ventilateur). Les moteurs 1PP5 et 1PP9 sont autorefroidis par ventilateur monté sur l'arbre ou ventilés par un motoventilateur rapporté. Les moteurs 1LP5, 1LP9 et *1MF5* sont à refroidissement naturel (pas de ventilateur).

Les pattes des moteurs de désignation de carcasse 100L et 112M viennent de coulée. Les pattes des moteurs 132S à 200L sont vissées à la carcasse (voir Fig. 2).

Seules les pattes des moteurs de désignation de carcasse 132S à 200L peuvent donc être déplacées, par exemple pour modifier la position de la boîte à bornes (voir Fig. 5). Sur les moteurs 180M à 200L, il faut tarauder les trous existants dans la carcasse. Il faut ensuite rétablir la coplanéité des surfaces d'appui des pattes par usinage et en utilisant au besoin des cales.
Pour les moteurs 1LC5, il convient d'observer en plus les instructions de service du frein.

2 Fonctionnement

ATTENTION **Avant toute intervention sur la machine, vérifier qu'elle est bien hors tension.**

2.1 Transport, manutention et stockage

Pour la manutention, utiliser tous les **oeillets de levage** disponibles sur le moteur.

ATTENTION **Les groupes de machines (par ex. motoréducteurs, motocompresseurs, etc.) ne doivent être manutentionnés que par les oeillets ou chevilles d'élingage prévus à cet effet. Ils ne doivent pas être levés par les machines individuelles. La charge limite du dispositif de levage doit être respectée.**

Dans des conditions d'entreposage favorables (dans des locaux secs, à l'abri de poussières et de trépidations), regraisser ou remplacer les **roulements à billes** s'il s'est écoulé plus de 4 ans entre la livraison et la mise en service du moteur. Dans des conditions défavorables, cette période sera plus courte en conséquence.

Ler cas échéant, contrôler la résistance d'isolement des enroulements (voir chap. 2.5).

2.2 Installation

Après l'installation, serrer ou enlever les **oeillets de levage vissés**.

Sur les **moteurs à bout d'arbre vers le haut ou vers le bas** (p.ex. IMV5, IMV6, voir Fig. 1), prendre les dispositions pour protéger le palier supérieur contre la pénétration d'eau.

La **partie supérieure des boîtes à bornes** avec plaques de bornes à six bornes peut être tournée de 4 x 90°; la partie supérieure des boîtes à bornes avec plaques de bornes à 9 bornes peut être tournée de 180°.

Comportement vibratoire
La stabilité des fondations et des supports de montage, la précision de l'alignement des machines et l'équilibrage soigné des organes de transmission sont les conditions d'un bon comportement vibratoire. C'est ainsi qu'il faudra par exemple interposer sous les pattes des cales en tôle pour empêcher le gauchissement du moteur ou procéder à l'équilibrage du rotor complet avec les éléments de transmission.

2.3 Equilibrage, organes de transmission

L'emmanchement et l'extraction des organes de transmission (demi-accouplements, poulies, roues demtées,...) devront se faire avec les dispositifs appropriés (Fig. 7).

Les moteurs en version standard ont fait l'objet d'un équilibrage dynamique avec clavette entière.

Sur les moteurs fabriqués à partir de 1991, le type d'équilibrage est indiqué par un marquage en bout d'arbre côté D:
(**F =** équilibrage avec clavette **entière**)
(**H =** équilibrage avec **demi-clavette** - version spéciale)
Lors du montage de l'organe de transmission, veiller à ce que le type d'équilibrage de ce dernier corresponde à celui du rotor.

Equilibrage avec demi-clavette
Pour les organes de transmission dont le rapport de la longueur de moyeu à la longueur l_M du bout d'arbre est < 0,8 et pour des vitesses > 1500 tr/min, il peut se produire des balourds (voir Fig. 8).
Effectuer le cas échéant un rééquilibrage après avoir par exemple éliminé l'excédent de matière T_P de la clavette qui fait saillie par rapport au moyeu et à l'arbre.

⚠ ATTENTION **Prendre les mesures habituelles de protection des personnes contre l'accès aux parties en mouvement au niveau des organes de transmission. Lorsqu'un moteur est mis en marche sans organes de transmission, prendre les mesures nécessaires afin d'empêcher que la clavette ne soit projetée hors de l'arbre par force centrifuge.**

2.4 Raccordement électrique

Comparer la tension et la fréquence du réseau aux indications de la plaque signalétique. Une variation de ±5 % de la tension ou de la fréquence (pour *1MA5/1MF5 de ±3 %* de la fréquence) est admissible sans déclassement en puissance. Réaliser le branchement et disposer les barrettes de couplage conformément au schéma situé dans la boîte à bornes. Raccorder le conducteur de protection à la borne ⏚ .

Les conducteurs raccordés à des bornes à étrier doivent être disposés de telle sorte que l'étrier repose à la même hauteur de part et d'autre de la vis. Lorsqu'un seul conducteur est raccordé, il doit être plié en U autour de la vis ou être muni d'une cosse (voir Fig. 3.1). Il en est de même du conducteur de protection et le conducteur de terre externe vert jaune (voir Fig. 3.2).

Couples de serrage des vis et écrous des bornes de la plaque à bornes (ne concerne pas les borniers), bvoir Fig. 4.

2.5 Contrôle de la résistance d'isolement

Avant la première mise en service de la machine, après un entreposage de longue durée ou encore une interruption de service prolongée (env. 6 mois), la résistance d'isolement des enroulements doit être mesurée.

⚠ ATTENTION **Durant la mesure et immédiatement après, les bornes sont portées en partie à une tension dangereuse et ne doivent pas être touchées**.

Résistance d'isolement

- La **résistance minimale d'isolement** mesurée par rapport à la masse est de 10 Mégohms pour les enroulements neufs, nettoyés ou remis en état.
- La **résistance critique d'isolement R_{krit}** se calcule en multipliant la tension assignée U_N, p.ex. 0,69 kV CA, par la constante 0,5Mégohms/kV :

  R_{krit} = 0,69 kV * 0,5 Mégohms/kV = 0,345 Mégohms

Mesure

La **résistance minimale d'isolement** des enroulements par rapport à la masse est mesurée avec une tension d'essai continue de 500 V.

La température des enroulements en cours d'essai doit être de 25 ± 15°C.

La **résistance critique d'isolement** doit être mesurée avec une tension d'essai continue de 500 V lorsque les enroulements ont atteint leur température en service.

Contrôle

La **résistance minimale d'isolement** par rapport à la masse mesurée sur les enroulements de machines ayant été entreposées pendant une période prolongée, ou encore sur des enroulements neufs, nettoyés ou remis en état peut être inférieure à 10 Mégohms en raison de l'humidité régnant au niveau des enroulements. Dans ce cas, sécher les enroulements.

Après un service prolongé, la valeur de la **résistance minimale d'isolement** peut se rapprocher de la valeur de la **résistance critique d'isolement**. Tant qu'elle ne tombe pas en-dessous de cette dernière, la machine peut rester en fonctionnement. Dans le cas contraire, la machine doit être arrêtée immédiatement.

Il faudra alors en déterminer la cause, et éventuellement remettre en état, nettoyer ou sécher les enroulements en totalité ou en partie.

2.6 Mise en service

NOTA : Un **couple très irrégulier** (par ex. lors de l'entraînement d'un compresseur à piston) donne lieu à un courant moteur non sinusoïdal dont les harmoniques sont susceptibles de polluer exagérément le réseau d'alimentation ou d'émettre des perturbations électromagnétiques.

Lors de **l'alimentation par convertisseurs statiques**, les câbles vers le moteur peuvent être le siège d'harmoniques de courant et de tension à haute fréquence qui sont la source d'émissions de perturbations électromagnétiques. Ceci oblige à utiliser des câbles d'alimentation blindés.

Avant mise en service, vérifier les points suivants :

- la résistance d'isolement minimale est respectée,
- le rotor peut être tourné sans qu'il frotte,
- le moteur est monté et aligné correctement,
- les organes de transmission sont correctement réglés (par ex. tension de courroie) et bien choisis pour l'emploi,
- les connexions électriques sont réalisées conformément aux prescriptions, et les vis des bornes sont serrées aux couples prescrits,
- le conducteur de protection est bien raccordé,
- les dispositifs additonnels éventuels (frein, ...) sont opérationnels,
- les mesures de protection des personnes contre l'accès aux parties actives (sous tension) ou en mouvement ont été prises,
- la vitesse limite n_{max} (lorsqu'elle est indiquée, voir plaque signalétique) ne doit pas être dépassée.

  NOTA : la vitesse limite n_{max} est la vitesse de service maximale temporaire. A cette vitesse, on observe une dégradation du comportement sonore et vibratoire ainsi qu'un raccourcissement de la période de renouvellement des roulements.

⚠ ATTENTION **Après montage de la machine, s'assurer que le frein (si présent) est en bon état de fonctionnement.**

La présente énumération ne peut être exhaustive. Des contrôles supplémentaires peuvent s'avérer nécessaires.

3 Maintenance

Dispositions générales concernant la sécurité

⚠ ATTENTION **Avant toute intervention sur le moteur, notamment avant d'ouvrir ou d'enlever les recouvrements des parties actives, il est indispensable de mettre le moteur hors tension conformément aux règlements de sécurité. En plus des circuits principaux, ne pas oublier les éventuels circuits auxiliaires et additionnels.**

Les "5 règles de sécurité" (par exemple selon DIN VDE 0105) sont applicables :

- mettre hors tension
- condamner les appareils (contre le réenclenchement)
- vérifier l'absence de tension
- mettre à la terre et court-circuiter
- recouvrir les parties actives voisines ou en barrer l'accès.

Ces mesures de sécurité ne doivent être supprimées qu'à l'issue de l'intervention de maintenance et lorsque tous les éléments du moteur sont remontés.

NOTA : Dans la mesure où le moteur doit fonctionner avec purgeurs de condensat fermés (par ex. en degré de protection IP55 ou IP56), il faut ouvrir de temps en temps les purgeurs pour évacuer l'eau condensée qui s'est accumulée.

Les purgeurs de condensats sont toujours à installer au point le plus bas du moteur.

Remplacement des roulements, graissage

Dans des conditions de service normales, avec moteur à axe horizontal et température d'air de refroidissement jusqu'à 40 °C, la périodicité de remplacement des roulements est d'environ

- 20 000 heures de service à 1500 tr/min,
- 10 000 heures de service 3000 tr/min.

Pour des raisons de vieillissement, la graisse devrait être renouvelée tous les 3 ans, indépendamment du nombre d'heures de service.

Dans les conditions d'utilisation particulières, par ex. axe vertical, fonctionnement fréquent à la vitesse limite n_{max}, grandes sollicitations par des vibrations et chocs, inversion fréquent du sens de marche, etc., la périodicité de remplacement des roulements devra être choisie plus courte.

Les moteurs sont équipés de roulements à billes à 1 déflecteur (version ZC3). Le déflecteur est disposé du côté carcasse (stator).

NOTA : lors du remplacement des roulements, veiller à l'orientation du déflecteur, vu que sur les exécutiuons spéciales la disposition peut différer de celle des exécutions standard.

Les déflecteurs seront en matière résistant aux températures entre -20 °C et +150 °C, par ex. caoutchouc de polyacryle (ACM).

Type de graisse (moteurs standards) : UNIREX N3 (Esso) ; les graisses de rechange doivent correspondre à DIN 51825-K3N.
Lews graisses spéciales sont spécifiées sur la plaque signalétique.

Eviter de mélanger différentes sortes de graisses.

Démonter le moteur dans la mesure du nécessaire. L'extraction des roulements doit être réalisée avec un dispositif approprié (voir Fig. 6). Nettoyer les portées de paliers ! Nettoyer les roulements ou les remplacer et le regraisser.

Remplir à ras de graisse les espaces libres des roulements ! Ne pas mettre de graisse dans les couvercles de paliers ni dans les flasques-paliers pour éviter un excédent de graisse.
Porter progressivement les roulements à une température d'environ 80 à 100 °C et les emmancher sur l'arbre. Eviter les coups secs (par ex.: coups de marteau).

Remplacer également tous les éléments d'étanchéité soumis à usure (par exemple bagues d'étanchéité).
Les bagues d'étanchéité à frottement radial sans ressort seront remplacées par des bagues de même type (sans ressort).

Dispositif de graissage
Pour les moteurs avec graisseurs, respecter les indications figurant sur la plaque signalétique.

Etanchéité des jointures
Lors du réassemblage des moteurs avec un degré de protection IP 55 ou supérieur (voir plaque signalétique), les jointures en métal nu entre la carcasse et les flasques-paliers doivent être étanchées avec un produit pâteux ne durcissant pas, p. ex. Fluid-D.

Ventilateurs en matière plastique (dés. carcasse 180M à 200L)
Les ventilateurs en matière plastique comportent de moulage deux languettes qui s'engagent dans la gorge de l'arbre à titre d'immobilisation en translation. Avant d'extraire le ventilateur, il faut dégager les deux languettes et les maintenir provisoirement dans cette position par des cales. Les ventilateurs comportent dans le disque raidisseur deux trous pour le passage de l'arrache-moyeu. A la livraison, ces trous peuvent être obstrués par un mince voile.
L'extraction et l'emmanchement du ventilateur doivent être réalisés avec un dispositif approprié. Ne pas donner de coups de marteau.

4 Moteurs EEx e 1MA5, 1MF5 selon

DIN EN 50014/VDE 0170/0171 fascicule 1 et
DIN EN 50019/VDE 0170/0171 fascicule 6

Les parties de texte en itallique s'appliquent en complément ou spécialement aux moteurs EEx e 1MA5, 1MF5.

**Les moteurs 1MA5 dont le bout d'arbre est orienté vers le haut (par ex. formes IM V 3, IM V 6, IM V 19 ; voir Fig. 1) doivent étre équipés d'un recouvrement empêchant les corps étrangers de tomber dans le capot du ventilateur (cf. DIN EN 50014/VDE 0170/0171, fascicule 1, III, 16.1). Ce recouvrement ne doit pas entraver le refroidissement du moteur par son ventilateur.*
La classe de température figurant sur la plaque signalétique du moteur doit coïncider avec celle du gaz combustible susceptible de se présenter. Chaque moteur sera protégé par un disjoncteur moteur, que l'on réglera sur le courant assigné du moteur et qui déclenchera, si le rotor est calé, en l'espace de temps t_E figurant sur la plaque signalétique du moteur (essai sur le vu de la caractéristique de déclenchement jointe au disjoncteur moteur). Dans le cas du couplage en traingle, il faudra prévoir une protection contre les surcharges sensible aux coupures de phase. Les moteurs à polarités multiples comporteront un disjoncteur pour chaque nombre de pôles.

Mais si l'on veut assurer la protection contre les surcharges exclusivement par un équipement de surveillance directe de la température à l'aide de sondes thermométriques (voir DIN EN 50019/VDE 0170/0171 fascicule 6, annexe A-A1.b), il faut que la version du moteur soit spécialement contrôlée et agréée à cet effet.

Se reporter également à la norme DIN 57165/VDE 0165.
Les réparations devront être confiées à un atelier Siemens ou être attestées par un expert agréé.

Indicaciones generales

PRECAUCION

Para evitar **peligros** y **daños**, es imprescindible observar siempre los datos y las indicaciones que figuran en todas las instrucciones de servicio y en las demás suministradas. Estas instrucciones de servicio llevan adjuntas otras (de color amarillo), que contienen datos suplementarios sobre la seguridad de las máquinas eléctricas. Son por tanto un complemento de las demás instrucciones generales y de servicio suministradas.
Además rigen las **condiciones y prescripciones vigentes nacionales, locales y específicas de la instalación**.
Pueden diferir los detalles técnicos de las **ejecuciones especiales** y **variantes**. En caso de dudas, es perentorio dirigirse al fabricante indicando la **designación de tipo y el número de serie**, o dejar que un centro de service de SIEMENS efectúe los trabajos de conservación.

INDICACION: Figs. 2 ... (Piezas de recambio), v. Anexo págs. 16

1 Descripción

1.1 Campo de aplicación

Los motores pueden instalarse en ambientes húmedos o polvorientos. El aislamiento es resistente al clima tropical. Normalmente no es preciso adoptar medidas de protección especiales contra los efectos climatológicos, si los motores se almacenan o se depositan a la intemperie convenientemente.

Nivel de intensidad acústica en la superficie, a 50 Hz
(DIN EN 21 680, parte 1)
1 LA5, *1MA5* aprox. 51 a 76 dB(A)

1.2 Funcionamiento y constitución

Los motores 1LA5, 1LA9, 1LB5, 1LC5 y *1MA5* tienen autorrefrigeración (con ventiladores). Los motores 1PP5 y 1PP9 tienen refrigeración propia bien sea, p. ej., cuando se emplean para impulsar ventiladores, por disponer de un ventilador especial montado en el extremo del eje, o por tener ventiladores independientes. Los motores 1LP5, 1LP9 y *1MF5* tienen autorrefrigeración (sin ventiladores).

Los motores con patas de los tamaños 100L y 112M las tienen fundidas con la carcasa y los de los tamaños 132S a 200L las llevan atornilladas (v. Fig. 2).
El cambio de las patas en la carcasa, p. ej. para modificar la posición de la caja de bornes, solo es posible en los tamaños 132S a 200L. En el modelo BG180M...200L se habrá de roscar con macho los taladros en la carcasa del motor para poder sujetar las patas, teniendo que repasar seguidamente las superficies de apoyo de las mismas para situarlas en un plano y aplicar suplementos si fuera preciso.

En los motores 1LC5 hay que observar adicionalmente las instrucciones de servicio del freno.

2 Operación

PRECAUCION **En los motores solo se trabajará cuando no estén bajo tensión.**

2.1 Transporte, almacenamiento

Durante el transporte se utilizarán todas las anillas de suspensión disponibles.

PRECAUCION **Para transportar grupos de máquinas (p. ej., reductores, ventiladores adosados, ...) utilizar únicamente las anillas o muñones de suspensión previstos. Los grupos de máquinas no deben elevarse colgados de las máquinas individuales. Comprobar la capacidad de carga de estas anillas.**

Los **rodamientos** se volverán a engrasar o se renovarán si han transcurrido más de 4 años bajo condiciones favorables desde el suministro hasta la puesta en servicio (conservación en locales secos, exentos de polvo y de trepidaciones). Si las condiciones son desfavorables, este período se acorta considerablemente.

En caso dado se comprobará la resistencia de aislamiento, v. apartado 2.5.

2.2 Emplazamiento

Las **anillas atornilladas** se apretarán o retirarán después de la instalación.

En las **máquinas de eje vertical** (p. ej., IMV5, IMV6 - v. Fig. 1), hay que garantizar que no pueda entrar agua en el rodamiento superior.

La **parte superior de la caja de bornes** con placa de 6 bornes se puede girar en 4 x 90 grados y con placa de 9 bornes en 180 grados.

Estabilidad de marcha

Son condiciones previas para lograr una marcha estable, con vibraciones reducidas, que la conformación de los cimientos o las condiciones de adosado/empotrado sean estables, junto con una alineación exacta de los motores y un buen equilibrado de los elementos de accionamiento. Por ejemplo, se pueden colocar chapas delgadas debajo de las patas para evitar las torsiones en los motores o, en caso dado, puede que sea necesario un equilibrado completo del rotor junto con el elemento de accionamiento.

2.3 Equilibrado, elementos de accionamiento

Se han de calar y extraer los elementos de accionamiento (acoplamientos, poleas de transmisión, ruedas dentadas, ...)con un dispositivo adecuado (Fig. 7).

Los rotores están equilibrados dinámicamente con chaveta entera de manera estándar.

A partir de las series de 1991, el tipo de equilibrado se marcará en el LA del extremo del eje:

(**F** = equilibrado con chaveta entera)

(**H** = equilibrado con media chaveta - ejecución especial)

Al montar el elemento de accionamiento observar que sea adecuado el tipo de equilibrado.

Equilibrado con media chaveta

En los elementos de accionamiento con una relación de la longitud de cuba l a la longitud del extremo del eje l_M < 0,8 y velocidades > 1500/min, pueden aparecer irregularidades en la estabilidad de marcha (v. Fig. 8). En caso dado será necesario un reequilibrado, p. ej., mecanizar la parte de la chaveta T_p que sobresale del elemento de accionamiento y del contorno del eje.

Se observarán las medidas generales necesarias para la protección contra contactos involuntarios de los elementos de accionamiento.
Si se opera un motor sin elemento de accionamiento, habrá que asegurar la chaveta contra su eyección.

2.4 Conexión

La tensión y frecuencia de la red tienen que ser las indicadas en la placa de características. Son admisibles desviaciones de tensión o de frecuencia de ±5 % como máximo (para *1MA5/1MF5*, *desviaciones máximas de frecuencia de ±3 %*), sin que por ello disminuya la potencia. Llevar a cabo el empalme y la colocación de los estribos de maniobra según el esquema que se encuentra en la caja de bornes. Empalmar el conductor de protección al borne marcado con ⏚ .

En los bornes con estribo (p. ej. según DIN 46282) los conductores se distribuirán de tal manera que resulte aprox. la misma altura de conexión en ambos lados. Este tipo de conexión requiere doblar en U uno de los conductores, o usar un terminal (v. Fig. 3.1). Esto rige igualmente para la conexión del conductor de protección y para el conductor de puesta a tierra exterior, de color amarillo y verde (v. Fig. 3.2).

Los terminales eléctricos roscados y los bornes de conexión (exceptuando los de las regletas) estén apretados con el par prescrito; véase la fig. 4.

2.5 Control de la resistencia del aislamiento

Antes de la primera puesta en marcha, tras largos períodos de almacenamiento o de parada (aprox. 6 meses) hay que medir la resistencia del aislamiento de los arrollamientos.

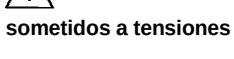

Durante la medición y seguidamente después de ella, los bornes a veces están sometidos a tensiones peligrosas, por lo que no deben tocarse.

Resistencia del aislamiento

- La **resistencia mínima del aislamiento** contra masa de un arrollamiento nuevo, limpio o reparado es de 10 Megaohmios.
- En primer lugar se calcula la **resistencia del aislamiento crítica** $R_{crít.}$ Dicho cálculo se efectúa multiplicando la tensión asignada U_N, p. ej. 0,69 kV AC por el factor constante (0,5 Megaohmios/kV):
  $R_{crít}$ = 0,69 kV * 0,5 Megaohmios/kV = 0,345 Megaohmios.

Medición

La **resistencia mínima del aislamiento** contra masa de los arrollamientos se mide con 500 V c.c. Al hacerlo, la temperatura de los arrollamientos será de 25°C ± 15°C.
La **resistencia crítica del aislamiento** a la temperatura de servicio del arrollamiento se mide con 500 V c.c.

Control

Si en una máquina nueva, limpia o tras un largo período de almacenamiento o de paro la **resistencia del aislamiento mínima** contra masa del arrollamiento fuese menor de 10 Megaohmios podría haber un exceso de humedad. En este caso se secarán los arrollamientos.
Tras un largo período de funcionamiento la **resistencia mínima** del aislamiento puede bajar a la **resistencia crítica**. Mientras el valor medido no sea menor que el calculado para la **resistencia crítica** la máquina podrá seguir funcionando. Si se alcanzara un valor menor habría que parar inmediatamente la máquina.
Hay que averiguar cuál es el motivo y en su caso reparar los arrollamientos o sus partes, limpiarlos o secarlos.

2.6 Puesta en servicio

INDICACION: Cuando el **par es muy irregular** (p. ej., accionamiento de un compresor de émbolo) se fuerza la formación de una corriente distorsionada, cuyas oscilaciones armónicas pueden influenciar indebidamente a la red así como también emitir perturbaciones electromagnéticas inadmisiblemente altas.

Si la **alimentación es a través de un convertidor**, las oscilaciones armónicas de tensión y corriente de alta frecuencia en las líneas de alimentación pueden emitir perturbaciones electromagnéticas. Por esta razón se recomienda el uso de conductores blindados.

Antes de la puesta en servicio se comprobará si

- se han observado las resistencias mínimas del aislamiento
- el rotor puede girarse sin que roce
- si el motor está alineado y montado correctamente
- los elementos de accionamiento están ajustados correctamente (p. ej., la tensión de la correa en caso de accionamiento por correa, ...) y que el elemento de accionamiento es el adecuado para la aplicación prevista
- todas las conexiones eléctricas, así como los tornillos y elementos de unión están apretados y ejecutados según las disposiciones
- que el conductor de protección se ha fabricado de acuerdo a las prescripciones
- que todos los dispositivos adicionales (frenos, ...) están en condiciones de prestar servicio
- que se han tomado las medidas necesarias contra contactos involuntarios de piezas en movimiento y bajo tensión
- que no se sobrepasa la velocidad límite $n_{máx}$ (v. placa de características).
  INDICACION. La velocidad límite $n_{máx}$ es la velocidad de servicio máxima admisible durante cortos períodos. Hay que tener en cuenta que en este caso el comportamiento empeora respecto al ruido y a las vibraciones del motor y que se acorta el período para el cambio de los rodamientos.

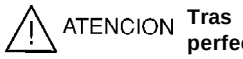

Tras montar los motores se comprobará el perfecto funcionamiento de los frenos (si existen).

Esta lista no es completa. Posiblemente sean necesarias pruebas adicionales.

3 Mantenimiento

Medidas de seguridad

PRECAUCION **Antes de comenzar cualquier trabajo en el motor o en el aparato y, especialmente, antes de abrir las cubiertas de las partes activas, debe desconectarse según las prescripciones. Tener en cuenta los circuitos adicionales o auxiliares que pudieran haber junto con los circuitos principales.**

Las usuales "5 reglas de seguridad" según, p. ej., DIN VDE 0105 son:

- Desconectar
- Asegurar contra la reconexión
- Comprobar si está libre de tensión
- Poner a tierra y cortocircuitar
- Cubrir o delimitar las partes contiguas que estén bajo tensión.

Solo podrán retirarse estas medidas cuando se hayan acabado los trabajos de mantenimiento y el motor se haya montado completamente

INDICACION: Deberán abrirse de cuando en cuando los taladros para el agua de condensación en los motores en los que dichos agujeros estén tapados (p. ej., grado de protección IP55 ó IP56, v. placa de características), para permitir la salida del agua que pudiera haberse acumulado.

Las aberturas para el agua de condensación siempre deberán situarse en la parte más baja del motor.

Cambio de rodamientos, tipo de grasa

El plazo para el cambio de los rodamientos bajo condiciones normales de servicio, montaje horizontal del motor, temperatura del medio refrigerante de hasta 40°C y con velocidades del motor de

- 1500/min, es aprox. 20.000 horas de servicio
- 3000/min, es aprox. 10.000 horas de servicio.

Independientemente de las horas de servicio, se recomienda renovar la grasa aprox. cada 3 años debido a su envejecimiento.

Bajo condiciones de servicio especiales, p. ej., montaje vertical, servicio frecuente a velocidades límite $n_{máx}$, con grandes cargas por vibraciones y choques, así como con muchos servicios con inversión de marcha, se reducen considerablemente las horas de servicio indicadas.

Los motores tienen rodamientos radiales rígidos con un disco de cierre (ejecución ZC3).
El disco de cierre está colocado en el lado del rodamiento dirigido hacia la carcasa del motor (estator).

INDICACION: Al cambiar los rodamientos observar la disposición del disco de cierre ya que las ejecuciones especiales pueden variar de las estándar.

Estos discos deberán resistir temperaturas desde -20°C hasta +150°C, p. ej., ser de caucho poliacrílico (ACM).

Tipo de grasa en las máquinas estándar: UNIREX N3 (marca ESSO); las grasas alternativas deben satisfacer DIN 51825-K3N.
Las grasas especiales se indican en la placa de características.

Evítese la mezcla de grasas.

Despiezar el motor tanto como sea necesario. Extraer el rodamiento con el dispositivo adecuado (v. Fig. 6). Limpiar de impurezas al alojamiento. Limpiar o renovar los rodamientos y volverlos a engrasar.

Llenar a ras los recintos huecos del rodamiento. No se llena de grasa la tapa o el escudo portacojinetes, para evitar un engrase excesivo.
Calentar uniformemente los rodamientos a aprox. 80-100°C y calarlos. Evitar golpes fuertes (p. ej., con un martillo, ...).

También se renovarán los elementos de junta deteriorados (p. ej., los anillos de cierre radial de eje etc.).
Si los anillos de cierre radial del eje no tuvieran muelles, tampoco se pondrán muelles en los nuevos.

Dispositivo de reengrase
En los motores con dispositivo de reengrase, se observarán las indicaciones en la placa de características.

Sellado de juntas
Al montar máquinas con grado de protección IP55 o más (v. placa de características), las superficies pulidas entre la carcasa del motor y los escudos portacojinetes deberán hermetizarse con una pasta obturadora que no se endurece, p. ej., Fluid D.

Ventiladores de material plástico (BG180M ... 200L)
Cada ventilador de plástico tiene dos lengüetas moldeadas que encajan como fijación axial en la ranura anular del eje. Antes de extraer el ventilador, desencajar estas dos lengüetas y fijarlas provisionalmente en esta posición, p. ej., por medio de piezas insertadas. Los ventiladores tienen en el disco portador dos aberturas para poder pasar el dispositivo de extracción y actuar sobre el cubo. Puede que en estado de suministro las aberturas aún estén cubiertas de una fina hoja de plástico.
Tanto para calar como para extraer se utilizará siempre el dispositivo adecuado. Son absolutamente inadmisibles los martillazos.

4 Motores EEx e 1MA5, 1MF5

DIN EN 50 014/VDE 0170/0171 parte 1 y
DIN EN 50 019/VDE 0170/0171 parte 6

Para estos motores rigen las informaciones en letra cursiva, de forma complementaria o especial.
**En caso de motores en los que el extremo del eje queda hacia arriba, por ejemplo, en las formas constructivas IM V 3, IM V 6, IM V 19 (v. Fig. 1), habrá que disponer una cubierta para evitar que puedan penetrar cuerpos extraños por la tapa del ventilador (v. DIN EN 50014/VDE 0170/0171, parte 1, apartado III, 16.1). Esta cubierta no debe impedir la refrigeración del motor por el ventilador.*
La clase de temperatura indicada en la placa de características del motor ha de coincidir con la de los gases combustibles que pudieran desprenderse. Cada motor ha de tener un guardamotor ajustado a la intensidad nominal de la máquina, que dispare en el tiempo t_E indicado en la placa del motor, cuando esté bloqueado el rotor (prueba a la vista de la característica de disparo que acompaña al guardamotor). Como protección contra sobrecargas en las conexiones en delta se preverá un monitor de fase. Los motores de polos conmutables necesitan un guardamotor apropiado para cada número de pares de polos.
Si la protección contra sobrecargas se estableciese exclusivamente mediante un dispositivo de vigilancia de temperatura con sensores térmicos (véase DIN EN 50019/VDE 0170/0171, parte 6, anexo A-A1.b), habrá que comprobar el motor especialmente para este fin y extender el oportuno certificado.
Hacemos referencia a DIN 57165/VDE 0165.
Las reparaciones han de efectuarse en los talleres de Siemens o someterlas a la comprobación de un perito oficialmente reconocido.

ITALIANO

Avvertenze generiche

PERICOLO Per evitare **rischi e danni** è indispensabile attenersi alle avvertenze ed alle indicazioni contenute nella presente pubblicazione e nelle istruzioni supplementari in allegato (in giallo), relative alla sicurezza nell'impiego di macchine ed apparecchi elettrici, come pure quelle contenute in altri stampati attinenti.

Vanno inoltre rispettate le **norme ed esigenze nazionali, locali e specifiche** dell'impianto.

Esecuzioni speciali e varianti costruttive possono discostarsi in particolari tecnici. In caso di eventuali difficoltà, si prega di rivolgersi al costruttore, indicando il **tipo** e il **numero di matricola**, oppure di far eseguire i lavori di manutenzione da uno dei centri di service della Siemens.

Avvertenza: Fig. 2 ... (Parti di ricambio) , vedi appendice p. 16

1 Descrizione

1.1 Campo d'impiego

I motori possono essere installati in ambienti polverosi o umidi. L'isolamento è in versione tropicale. Se il deposito o l'installa- zione all'aperto sono eseguiti regolarmente, non è necessario in linea di massima alcun particolare accorgimento per proteggere i motori dalle intemperie.

Livello di pressione acustica delle superfici di misura a 50Hz
(DIN EN 21680 parte 1)
1LA5, *1MA5* ca. 51 a 76 dB(A)

1.2 Costruzione e modo di funzionamento

I motori 1LA5, 1LA9, 1LB5, 1LC5 e *1MA5* sono autoventilati (per mezzo di ventole). I motori 1PP5 e 1PP9 sono autoventilati, ad esempio se fungono da motori a ventilatori, da ventilatori speciali che vanno montati sui rotori, oppure per mezzo di ventilatori esterni. I motori 1LP5, 1LP9 e *1MF5* hanno ventilazione naturale (senza ventilatore).

Nei motori a piedini della grandezza 100L e 112M i piedini fanno corpo con la carcassa per fusione oppure, se si tratta dei motori della grandezza 132S...200L sono avvitati alla carcassa (ved. fig. 2). Per questa ragione un riposizionamento dei piedini sulla carcassa del motore, p. es. per variare la posizione della cassetta morsetti (ved. fig. 5), è possibile solo con i motori di grandezza 132S .... 200L. Se si tratta di motori a piedini del tipo 180M...200L, bisogna eseguire dei filetti utilizzando i fori sulla carcassa per il fissaggio dei piedini. In tale caso le superfici di supporto dei piedini devono essere di nuovo spianate e, se necessario, provviste di spessori.

Per i motori 1LC5 bisogna rispettare anche le istruzioni di servizio del freno.

2 Esercizio

PERICOLO **Si faccia attenzione che qualunque operazione sulla macchina venga effettuata solamente in assenza di tensione.**

2.1 Trasporto, deposito

Il sollevamento di motori con più **occhielli** deve avvenire utilizzandoli tutti.

PERICOLO **Per il trasporto di gruppi di macchina (ad es. azionamenti, soffianti supplementari) vanno utilizzati soltanto gli occhielli ed i perni previsti per il sollevamento. Il sollevamento di un gruppo di macchine non deve mai avvenire aggianciando la componente supplementare alla macchina principale.**
Assicurarsi che la capacità di portata degli apparecchi di sollevamento sia sufficiente.

E' consigliabile reingrassare i **cuscinetti** se fra la fornitura e la messa in servizio dei motori in condizioni favorevoli (magazzinaggio in ambienti asciutti, esenti da polvere e vibrazioni), è trascorso un periodo superiore a 4 anni. In condizioni non favorevoli la durata è notevolmente più breve.

Eventualmente va controllata la resistenza d'isolamento degli avvolgimenti, ved. sez. 2.5.

2.2 Installazione

Dopo l'installazione della macchina gli **occhielli di sollevamento avvitati** alla carcassa vanno serrati oppure tolti.

Nelle macchine con **estremità d'albero verso l'alto e verso il basso** (ad es. IMV5, IMV6, ved. fig. 1) si deve fare attenzione che non possa penetrare acqua nel cuscinetto superiore.

La **parte superiore della carcassa morsetti** può essere ruotata di 4x90 gradi, in caso di una morsettiera a 6 morsetti e di 180 gradi con una morsettiera a 9 morsetti.

Silenziosità di funzionamento
Per il funzionamento silenzioso ed equilibrato della macchina sono indispensabili dei fondamenti stabili e condizioni favorevoli all'installazione come anche la regolazione corretta del motore e l'equilibratura precisa dell'elemento di azionamento.
Per garantire ciò, può risultare necessario eseguire l'equilibratura completa con l'elemento di azionamento oppure stabilizzare la macchina con spessori di lamiera sottili posti sotto i piedini per provvedere ad eventuali distorsioni.

2.3 Equilibratura, elementi di azionamento

Le operazioni di calettamento e di estrazione degli elementi di trasmissione (disco di accoppiamento, puleggia, ingranaggio, ..) devono essere sempre eseguite con le apposite attrezzature (fig.7).

Alla fornitura, i rotori sono equilibrati dinamicamente con chiavetta piena.

Dall'anno di fabbricazione 1991, il tipo di equilibratura è segnata all'estremità dell'albero (sul lato A/azionamento, parte anteriore).
(**F** = equilibratura con chiavetta **piena**)
(**H** = equilibratura con **mezza** chiavetta)
Considerare il tipo di equilibratura prima del montaggio dell'elemento di azionamento!

Equilibratura con mezza chiavetta
In caso di elementi di azionamento con un rapporto di lunghezza di l_M < 0,8 e con una velocità superiore a 1500 giri/min., può risultare compromessa la silenzionsità di funzionamento (ved. fig.8).
Eventualmente sarà necessaria la riequilibratura, ad es. riducendo la lunghezza della chiavetta T_P sporgente dall'elemento di azionamento all'estremità dell'albero.

PERICOLO **Osservare le misure di protezione generali contro i contatti accidentali degli elementi di azionamento.**
Se la messa in servizio di un motore avviene senza l'elemento di azionamento, la chiavetta deve essere protetta contro l'espulsione.

2.4 Allacciamento

La tensione e la frequenza di rete devono coincidere con i dati riportati sulla targhetta. Sono ammessi scostamenti del ±5% della tensione o della frequenza *(per 1MA5/1MF5 ±3% della frequenza),* in quanto essi non causano una riduzione della potenza. Il collegamento e la disposizione dei ponticelli dovranno corrispondere a quelli indicati dallo schema applicato all'interno della cassetta morsetti. Si colleghi il conduttore di protezione al morsetto contrassegnato da ⏚ .

Quando si effettuano i collegamenti con morsetti di serraggio (per es. secondo DIN 46282), si faccia attenzione che i conduttori abbiano lo stesso spessore su entrambi i lati del morsetto. Questo tipo di collegamento richiede quindi che i singoli conduttori vengano ripiegati ad U o allacciati tramite capocorda. (ved. fig. 3.1). Ciò vale anche per il conduttore di protezione ed il conduttore di messa a terra esterno giallo-verde (vedi Fig.3.2).

Coppie di serraggio ammesse per viti e dadi dei morsetti (ad eccezione di quelli della morsettiera) vedi fig. 4.

2.5 Verifica della resistenza di isolamento

Prima della prima messa in servizio del motore dopo un lungo periodo di magazzinaggio o di sosta (circa 6 mesi), è necessario determinare la resistenza d'isolamento degli avvolgimenti.

PERICOLO **Durante e subito dopo la misurazione, i morsetti sono in parte sotto tensione pericolosa e non vanno quindi assolutamente toccati!**

Resistenza d'isolamento
- La **resistenza d'isolamento minima** contro massa di avvolgimenti nuovi, puliti o riparati è 10 MegaOhm
- La **resistenza critica d'isolamento R_{krit}** deve prima essere calcolata. Il calcolo avviene moltiplicando la tensione di taratura U_N, per es. 0,69 kV AC, con il fattore costante (0,5 MegaOhm/kV).

R_{krit} = 0,69 kV * 0,5 MegaOhm/kV = 0,345 MegaOhm

Misurazione
La **resistenza d'isolamento minima** degli avvolgimenti contro massa viene misurata con tensione continua di 500V. La temperatura degli avvolgimenti dovrebbe essere 25°C ± 15°C.
La **resistenza critica d'isolamento** va misurata sulla temperatura di servizio degli avvolgimenti, con tensione continua di 500V.

Verifica
Se, nel caso di una macchina nuova , pulita o rimessa a punto che è stata a lungo in maggazino oppure ferma, la **resistenza minima d'isolamento** degli avvolgimenti contro massa è minore di 10MegaOhm, l'umidità può esserne la causa. Bisogna quindi asciugare gli avvolgimenti.
Dopo un lungo periodo di esercizio, la **resistenza minima** può ridursi alla **resistenza critica** d'isolamento. Fintanto che il valore non scende al di sotto di quello della resistenza critica, si può continuare ad utilizzare la macchina. Nel momento in cui il valore scende al di sotto, la macchina deve essere immediatamente disinserita, e bisogna ricercare le cause; eventualmente dovranno essere rimessi a punto, puliti o asciugati gli avvolgimenti o le sezioni dell'avvolgimento.

2.6 Messa in servizio

Avvertenza: In caso che la **coppia** sia **fortemente disuniforme** (ad es. azionamento di compressore a stantuffi), si forma forzatamente una corrente di macchina non sinusoidale, la cui frequenza di armonica può avere una influenza non ammissibile sulla rete e può essere la causa di disturbi elettromagnetici troppo forti.

L'**alimentazione tramite convertitore** può causare disturbi elettromagnetici derivanti dalla corrente o da tensioni con una frequenza di armonica troppo elevata nei conduttori del motore.Si raccomanda perciò l'impiego di conduttori schermati.

Prima della messa in servizio bisogna verificare che:
- la resistenza d'isolamento minima sia in regola
- il rotore possa ruotare senza strisciare
- il motore sia montato ed allineato correttamente
- gli elementi di azionamento siano regolati esattamente (per es. tensione della cinghia in caso di azionamento a cinghia) e siano adatti alle condizioni d'impiego.
- utti gli allacciamenti elettrici, viti di fissaggio ed elementi di collegamento siano eseguiti correttamente e ben serrati secondo le istruzioni.
- il conduttore di protezione sia in regola
- funzionino eventuali apparecchiature supplementari (freni...)
- siano attuati tutti i provvedimenti per la protezione contro i contatti accidentali delle parti in movimento o sotto tensione.
- che il limite max. di giri (n_{max}) non venga superato (vedi targhetta).
  Avvertenza: Il numero max. di giri è ammesso solo per un breve periodo durante il funzionamento. Bisogna tener conto che ciò può incidere negativamente sul comportamento della macchina in quanto riguarda le vibrazioni, la rumorosità ed i gli intervalli di sostituzione dei cuscinetti.

⚠ ATTENZIONE **Dopo l'installazionee dei motori va verificato il perfetto funzionamento del freno (se presente).**

Questo elenco non può essere completo. Possono essere eventualmente necessarie altre prove.

3 Manutenzione

Indicazioni di sicurezza

⚠ PERICOLO **Prima di iniziare qualsiasi lavoro sulla macchina e l'impianto, in particolare prima di aprire coperture e carcasse di parti in servizio, bisogna assicurarsi che la macchina sia priva di tensione. Ciò riguarda non solamente i circuiti principali, ma bisogna tener conto anche dei circuiti ausiliari e supplementari. Vanno rispettate le "5 regole di sicurezza", ad es sec. VDE 01505:**
- togliere la tensione
- proteggere il sistema contro la reinserzione
- assicurarsi che la macchina sia priva di tensione
- collegare a terra e cortocircuitare la macchina
- sbarrare o coprire le parti adiacenti che portano tensione.

Le misure di sicurezza sopraindicate devono essere rispettate fino alla portata a termine dei lavori di manutenzione ed alla completa installazione della macchina.

Avvertenza: In caso di macchine in esecuzione a fori chiusi per lo scarico di condensa (ad es. tipo di protezione IP55 o IP56, ved. targhetta), i fori devono essere aperti da tanto in tanto per scaricare la condensa eventualmente ristagnata.
I fori per la condensa devono essere situati sul fondo della macchina.

Sostituzione dei cuscinetti, tipi di grasso
Gli intervalli per la sostituzione dei cuscinetti sono in condizioni di funzionamento normale, cioè installazione orizzontale della macchina, temperatura del refrigerante inferiore a 40°C e un no. max. dei giri motore,
- 1500/min.: ca. 20 000 ore di servizio
- 3000/min.: ca. 10 000 ore di servizio

Indipendentemente dal numero delle ore di servizio è comunque raccomandabile sostituire il grasso al più tardi dopo 3 anni (per motivi di invecchiamento).
Sotto condizioni particolari, ad es. installazione verticale della macchina, funzionamento frequente al limite dei giri n_{max} e intense sollecitazioni da vibrazioni e urti, inversioni frequenti di marcia ecc., gli intervalli per la sostituzione dei cuscinetti sono notevolmente più brevi (riduzione delle ore di servizio sopraindicate).
I motori sono provvisti di cuscinetti a sfere a gola profonda con un disco di tenuta (esecuzione ZC3). Il disco di tenuta è disposto sul lato cuscinetti della carcassa del motore (statore).

AVVERTENZA: Prima della sostituzione dei cuscinetti bisogna assicurarsi della posizione del disco di tenuta, poichè esistono diversi varianti speciali rispetto all'esecuzione standard.
Il materiale dei dischi dovrebbe essere resistente a temperature entro -20°C e + 150°C, per es. caucciù di poliacrilio (ACM).

Tipo di grasso per le macchine standard: UNIREX N3 (ESSO). Altri tipi di grasso sostituivi devono corrispondere alle norme DIN 51825-K3N. Grassi speciali, vedi targhetta.

La miscelazione di diversi tipi di grasso va evitata.

Smontare il motore quanto è necessario per eseguire i lavori. Estrarre i cuscinetti con un attrezzo adatto (ved. fig. 6) e pulire la zona di montaggio dei cuscinetti da insudiciamenti.
Pulire i cuscinetti, sostituirli eventualmente ed eseguire la rilubrificazione. Riempire a livello i spazi vuoti dei cuscinetti con grasso. I copricuscinetti oppure lo scudo non vengono lubrificati per evitare un ingrassaggio eccessivo.
Riscaldare uniformemente i cuscinetti a 80° - 100°C e calettarli. Non dare colpi forti (martellate)! Vanno sostituiti anche eventuali elementi di tenuta ad usura (ad es. anelli di tenuta, ecc.). Se gli anelli di tenuta radiali sono installati senza molla, va utilizzato anche il ricambio nuovo senza molla.

Ingrassatore
In caso di macchine con ingrassatore, osservare le indicazioni riportati sulla targhetta.

Tenute
Durante l'assemblaggio di macchine con un grado di protezione IP55 o superiore (ved. targhetta), bisogna rendere stagni le giunzioni nude tra la carcassa e gli scudi per mezzo di un mastice adeguato, non indurente, ad es. "Fluid-D".

Ventilatori in materia plastica (BG180M...200L)
I venilatori in plastica hanno due linguette fuse che si incastrano nella cava dell'albero come fissaggio assiale. Prima di togliere la ventola, le due linguette devono essere disinnestate e mantenute provvisoriamente in questa posizione, per es. per mezzo di appositi spessori.
Sulla piastra di sostegno le ventole hanno due aperture per l'estrattore che deve agganciarsi al mozzo. E' possibile che queste aperture siano chiuse da un foglio di plastica per il trasporto. Per l'estrazione e l'applicazione deve venir utilizzato un utensile adatto. Evitare assolutamente di dare martellate!

4 Motori EEx "e"-1MA5, 1MF5 sec.

DIN EN 50014/VDE 0170/0171 parte 1 e
DIN EN 50019/VDE 0170/0171 parte 6

Per questi motori, valgono in particolare o in aggiunta anche le informazioni stampate in lettere corsive.
**Per motori 1MA5 con estremità d'albero disposta verso l'alto (ved. fig.1), per es. nelle forme costruttive IM V 3, IM V 6, IM V 19, dovrà montarsi superiormente una copertura contro la caduta di corpi estranei nella cuffia della ventola del motore (vedi DIN EN 50014/VDE 0170/0171 parte 1, sez. III, comma 16.1). Tuttavia questa protezione non deve impedire in alcun modo la regolare ventilazione del motore da parte della ventola.*
La classe di temperature indicata sulla targhetta del motore deve coincidere con la classe di temperature dei gas infiammabili che eventualmente potrebbero formarsi. Ogni motore deve essere dotato di un salvamotore che sarà tarato sulla corrente di taratura del motore e che sgancerà nel tempo t_E (prova da effettuare sulla scorta della caratteristica di sgancio, sul foglio annesso al salvamotore) indicato sulla targhetta del motore. I motori a poli commutabili richiedono un interruttore per ciascun polo.
Se però la protezione contro sovraccarichi deve essere effettuata esclusivamente mediante un dispositivo di controllo diretto, basato su una sonda termometrica (vedi DIN EN 50019/ VDE 0170/0171 parte 6, appendice A-A1.b), il motore costruito appositamente per questo scopo deve essere provato a parte e fornito di apposito certificato.
Si rimanda alle norme DIN 57165/VDE 0165.
Le riparazioni devono essere effettuate in officine della Siemens oppure collaudate da un perito ufficiale riconosciuto.

SVENSKA

Allmänna anvisningar

VARNING

För undvikande av risker och skador måste de uppgifter och anvisningar som ges i denna driftsinstruktion samt övriga tillhörande driftsinstruktioner ständigt beaktas.

Med denna driftsinstruktion medföljer även en annan instruktion (gul), som innehåller kompletterande säkerhetsuppgifter för elektriska maskiner och apparater. Denna gäller alltså som komplettering av alla övriga levererade drifts- och andra instruktioner inkl. sådana som ännu ej levererats.

Beakta dessutom alla **nationella**, **lokala** och **anläggningsspecifika bestämmelser** och krav.

Specialversioner och **varianter** kan avvika i tekniska detaljer. Ta alltid kontakt med tillverkaren vid eventuella oklarheter och ange därvid **typbeteckning och tillverkningsnummer**, eller låt alla reparationer utföras av en av SIEMENS servicecentraler.

OBS: Fig. 2 ... (Reservdelar) se bilagan på sid. 16

1 Beskrivning

1.1 Användningsområde

Motorerna kan installeras i dammig eller fuktig omgivning. Isoleringen är i tropikutförande. Vid ändamålsenlig lagring eller uppställning utomhus erfordras normalt inga speciella skyddsåtgärder mot väderpåverkan på motorerna.

Ljudtrycksnivå vid 50 Hz (DIN EN 21 680 del 1)
1LA5, *1MA5* c:a 51 till 76 dB(A)

1.2 Funktionssätt och konstruktion

Motorerna 1LA5, 1LA9, 1LB5, 1LC5 och *1MA5* har egen kylning (med fläkt). Motorerna 1PP5 och 1PP9 har egen kylning, antingen - t.ex. när de används som fläktmotorer - av en specialfläkt som sitter på axeltappen eller av en extern fläkt. Motorerna 1LP5, 1LP9 och *1MF5* har självkylning (utan fläkt).
Motorer med fötter i storlekarna 100L och 112M har fötterna pågjutna på motorhuset. På storlekarna 132S t.o.m. 200L är fötterna fastskruvade på motorhuset (se Fig. 2).
En omflyttning av fötterna, t.ex. för ändring av uttagslådans placering (se Fig. 5) går därför bara på 132S t.o.m. 200L. På BG180M t.o.m. 200L

måste man skära en gänga i de befintliga borrhålen i motorhuset för att kunna sätta fast motorfötterna. Men då måste man sedan se till att fötterna kommer i samma nivå, antingen genom att slipa ned dem, eller med hjälp av underlägg.
För motorerna 1LC5 gäller dessutom driftsinstruktionen för bromsen.

2 Drift

VARNING **Vid alla arbeten på motorn måste denna vara spänningslös.**

2.1 Transport, förvaring

Vid transport bör alla **lyftöglor** på motorn utnyttjas.

VARNING **Vid transport av hela maskinuppsättningar (t.ex. med kuggväxel- eller fläktaggregat) får man bara använda befintliga lyftöglor eller lyfttappar. Lyft inte maskinuppsättningarna genom att hänga dem i de enskilda maskinerna! Se till att lyftdonet har erforderlig kapacitet!**

Om motorn efter leveransen måste förvaras i mera än 4 år under gynnsamma förhållanden (i torrt, damm- och vibrationsfritt utrymme) innan den tas i drift, så måste rullningslagren fettas in på nytt. Vid förvaring under ogynnsamma förhållanden reduceras denna tid avsevärt.

Kontrollera lindningens isolationsmotstånd enl. avsnitt 2.5.

2.2 Installation

Iskruvade lyftöglor dras åt eller tas bort efter installationen.
För motorer som monteras med axeltappen uppåt eller nedåt (t.ex. IMV5, IMV6, se Fig. 1) måste man se till att vatten ej kan tränga in i det övre lagret.
Uttagslådans överdel kan vridas 4x90 grader, när man använder en anslutningsplint med 6 klämmor och 180 grader när man använder en plint med 9 klämmor.

Vibrationsfri gång
Förutsättningen för lugn och vibrationsfri gång är dels ett stabilt fundament, dels även att motorerna är exakt uppriktade och att drivdonet är väl balanserat. Man kan t.ex. undvika mekaniska spänningar genom att lägga tunna plåtar under fötterna. I vissa fall kan det bli nödvändigt att rikta hela rotorn tillsammans med drivdonet.

2.3 Balansering, drivdon

Drivdon (t.ex. kopplingar, remskivor, kugghjul ...) skall dras på och av med lämpligt verktyg (Fig. 7).
Motorer av standardmodell är dynamiskt balanserade med full kil (fullkil).
F.o.m. 1991 markeras balanseringstypen på axeltappens frontyta på A-sidan:
(**F** = balansering med **hel** kil)
(**H** = balansering med **halv** kil, specialutförande)
Se till att det drivdon som monteras är balanserat på samma sätt!

Balansering med halv kil
På drivdon med en navlängd l som är <0,8 av axeltappens längd l_M och med varvtal >1500/min kan rotationsstörningar inträffa (se Fig.8).
Eventuellt kan efterbalansering erfordras, t.ex. genom nedslipning av den del av kilen T_P, som sticker ut ur drivdonet och utöver axelns konturlinje.

VARNING **Vidta alla allmänt erforderliga åtgärder för beröringsskyddav drivdonen. Om en motor tas i drift utan drivdon skall kilen fixeras så att den inte kan kastas ut.**

2.4 Elektrisk anslutning

Nätspänning och nätfrekvens måste stämma överens med de data som anges på märkplåten. En spännings- eller frekvensavvikelse på ±5% *(vid 1MA5/1MF5 frekvensavvikelse på ±3%)* är tillåten utan att effekten behöver reduceras.
Anslutning och kopplingen av kopplingsblecken jämförs med kopplingsschemat på insidan av locket till anslutningslådan. Skyddsledare anslutes till denna plint ⏚ .

Vid kontaktklämmor med klämbyglar (t.ex. enl. DIN 46282) måste ledarna fördelas så att det blir ungefär samma klämhöjd på vardera sidan av balken.
Detta slags anslutning kräver därför att en enstaka ledare böjs i U-form, eller att man använder en kabelsko (Fig. 3.1). Detta gäller även skyddsledaranslutningen och den externa jordningsledaren (Fig. 3.2).

Åtdragningsmomenten för elanslutningarnas skruvförband (gäller ej plintrader), se Fig. 4.

Kontroll av isolationsmotståndet
Innan motorn tas i drift första gången samt efter en längre tids lagring (c:a 6 månader) måste man fastställa lindningarnas isolationsmotstånd.

VARNING **Under och omedelbart efter mätningen ligger det delvis farliga spänningar på klämmorna, som inte får beröras.**

Isolationsmotstånd
- Minsta isolationsmotstånd gentemot jord i nya, rengjorda eller reparerade lindningar är 10 MegaOhm.
- Det kritiska isolationsmoståndet Rkrit beräknas först teoretiskt. Detta gör man genom att multiplicera märkspänningen U_N, t.ex. AC 0,69 kV, med konstanta faktorn (0,5 MegaOhm/kV):
  R_{krit} = 0,69 kV x 0,5 MegaOhm/kV = 0,345 MegaOhm

Mätning
Ledningarnas minsta isolationsmotstånd gentemot jord mäts med likspänning 500 V. Därvid skall lindningarnas temperatur vara 25°C ±15°C.
Det kritiska isolationsmotståndet skall mätas med 500 V likspänning när lindningarna har driftstemperatur.

Kontroll
Om lindningarna i en ny, just rengjord eller reparerad motor som legat i lager eller stått stilla under en längre tid har ett minsta isolationsmotstånd gentemot jord som är mindre än 10 MegaOhm, så kan det bero på fukt. Då måste lindningarna torkas.

Efter en längre tids driftsuppehåll kan minsta isolationsmotståndet sjunka ner till det kritiska isolationsmotståndet. Så länge det uppmätta värdet för det kritiska isolationsmotståndet inte underskrider det beräknade värdet, kan motorn fortfarande hållas i drift. Om detta värde underskrids måste motorn omedelbart stoppas.
Fastställ orsaken till detta. Eventuellt kan det bli nödvändigt att reparera, rengöra eller torka ut lindningar eller lindningsdelar.

2.6 Idrifttagning

OBS: Vid starkt varierande vridmoment (t.ex. drivning av en kolvkompressor) uppstår en icke-sinusformad motorström, vars övertoner kan medföra en otillåten påverkan på nätet och alstra otillåtet stora elektromagnetiska störningar.

Vid matning med omriktare kan högfrekventa ström- och spänningsövertoner i ledningarna till motorn medföra elektromagnetiska störningar. Därför rekommenderas skärmade ledningar.

Kontrollera före idrifttagningen att
- minsta isolationsmotstånden ej överskrids,
- rotorn kan vridas runt utan att skrapa emot någonstans
- motorn är korrekt monterad och riktad
- drivdonen är rätt inställda (t.ex. remspänningen vid remdrift) och lämpade för avsedd användning
- alla elektriska anslutningar, skruvförband och förbindelseelement är åtdragna och utförda enligt föreskrift
- skyddsledare resp. skyddsjordning utförts korrekt
- eventuellt förekommande tillsatser (broms etc.) är funktionsdugliga
- beröringsskydd har ordnats för rörliga och spänningförande detaljer
- maximivarvtalet n_{max} (se märkskylten), ej överskrids
  OBS: Maximivarvtalet n_{max} är det högsta kortvariga varvtal som tillåts. Kom ihåg att detta försämrar motorns buller- och vibrationsegenskaper och reducerar lagerbytesintervallet.

VIKTIGT **Kontrollera att bromsen (om sådan förekommer) fungerar ordentligt när motorerna har monterats.**

Denna uppräkning kan inte vara fullständig. Ytterligare kontroller kan erfordras.

3 Underhåll

Säkerhetsåtgärder

VARNING **Innan något arbete på motorn eller utrustningen påbörjas, framför allt innan skydden över aktiva delar öppnas, måste motorn vara skild från nätet enligt gällande föreskrifter. Uppmärksamma förutom huvudströmkretsarna även eventuellt befintliga tillsats- eller hjälpströmkretsar.**
De vanligaste "5 säkerhetsreglerna" är därvid enligt DIN VDE 0105:
- Frånkoppling
- Säkra mot återinkoppling
- Fastställ spänningslöshet
- Jorda och kortslut
- Täck över eller spärra av intilliggande delar som fortfarande står under spänning

Ovannämnda åtgärder får inte återställas förrän underhållsarbetena är avslutade och motorn är fullständigt monterad.

OBS: På motorer med slutna kondensvattenöppningar (t.ex. kapslingsklass IP55 eller IP56, se märkskylten) måste dessa öppnas då och då, så att ev. uppsamlat kondensvatten kan rinna av. Kondensvattenöppningarna skall alltid sitta längst ned på motorn.

Lagerbyte, fettsorter

Vid normala driftsförhållanden, vågrät montering av motorn, kylmedelstemperatur max. 40°C blir lagerbytesintervallet
c:a 20 000 driftstimmar för motorvarvtal 1500/min
c:a 10 000 driftstimmar för motorvarvtal 3000/min
Oberoende av antalet driftstimmar skall fettet bytas vart 3:e år på grund av åldrande.

OBS: Vid speciella driftsförhållanden - t.ex. lodrät motorinstallation, ofta förekommande körning vid maximivarvtalet n_{max}, stora vibrations- eller stötbelastningar, ofta förekommande reverserande drift - reduceras ovannämnda intervall avsevärt.

Motorerna har spårkullager med en täckbricka (ZC3-utförande) och permanentsmörjning.

Täckbrickan är placerad på den lagersida som är vänd mot motorhuset (statorn).

OBS: Ge akt på täckbrickans placering vid lagerbyte, eftersom det finns specialutföranden med annat arrangemang. Materialet i brickan skall vara temperaturhållfast mellan -20° och +150°C, t.ex. polyakrylgummi.

Fettsorter för standardmotorer: UNIREX N3 (Esso). Utbytesfett måste uppfylla kraven i DIN 51825/K3N.

Blanda inte olika fettsorter!

Ta isär motorn i den mån det behövs. Dra av rullningslagren med lämpligt verktyg (se Fig. 6). Rengör lagerstället från föroreningar. Rengör eller byt ut rullningslagren och fetta in dem på nytt.

Fyll lagrens fettutrymmen upp till kanten! Lagerlock resp. lagersköld får ingen fettfyllning, så att överfettning undviks.

Värm upp lagren likformigt till ca. 80-100°C. Undvik hårda slag (t.ex. med hammare).

Ev. nedslitna tätningar (t.ex. radialtätningsring) skall också bytas ut. Om radialtätningsringar utan fjädrar är monterade, så får inte heller den nya ringen vara försedd med fjäder

Eftersmörjningsanordning
Om motorn är byggd för eftersmörjning, så följ uppgifterna på märkskylten.

Fogtätning
När man sätter ihop maskiner i kapslingsklass IP55 eller högre (se märkskylten) så måste de blanka monteringsytorna mellan motorhuset och lagersköldarna tätas med en lämplig tätningsmassa som inte hårdnar, t.ex. Fluid-D.

Plastfläkt (BG 180M ... 200L)
Plastfläktar har två pågjutna tungor, som snäpper in i spåret i axeln och fixerar fläkten. Innan fläkten dras av måste båda tungorna frigöras och provisoriskt hållas kvar i detta läge, t.ex. av inskjutna mellanbrickor. Skivan som håller fast fläkthjulen är försedd med två hål, genom vilka man kan sätta an en avdragare mot navet. Vid leveransen kan dessa hål vara förseglade med en tunn plasthinna.
Använd alltid lämpligt verktyg vid av- och pådragning. Slå inte med hammare!

4 EEx e-motorer 1MA5, 1MF5

DIN EN 50014/VDE 0170/0171 del 1 och
DIN EN 50019/VDE 0170/0171 del 6

För dessa motorer gäller även de speciella anvisningarna som är tryckta med kursiv.
**1MA5-motorer som monteras med axeländen uppåt, t.ex. IMV3, IMV6, IMV19 (se Fig. 1) måste förses med övertäckning, så att föroreningar inte kan falla ned i fläktkåpan (se DIN EN 50014/VDE 0170/0171, del 1, avsnitt III, 16.1).*
Övertäckningen får inte påverka fläktens kylning av motorn.
Den på märkplåten angivna temperaturklassen för motorn måste stämma överens med temperaturklassen för den brännbara gas som eventuellt kan förekomma. Varje motor måste säkras med en motorskyddsbrytare, som löser ut inom den på märkplåten angivna tiden t_E om rotorn kör fast (kontroll med hjälp av utlösningskurvan som bifogas skyddsbrytaren).
Polomkopplingsbara motorer kräver en brytare för varje poltal.
Om överlastskyddet endast skall bestå av en direkt temperaturövervakning med hjälp av temperaturgivare (se DIN EN 50019/VDE 0170/0171 del 6, bilaga A-A1.b), så måste motorns utförande härför särskilt kontrolleras och bekräftas.
DIN 57165/VDE 0165 skall beaktas.
Reparationer måste genomföras i Siemens-verkstäder eller måste godkännas av en behörig person.

DEUTSCH

Ersatzteile, vom Werk lieferbar
(s. Bestellbeispiel)

1.00 Lagerung AS
.40 Lagerschild
.43 Wellendichtring
.56 Ausgleichsscheibe
.58 Federscheibe
.60 Wälzlager
.61 Federband für Lagerschildnabe (nicht immer vorhanden)

3.00 Läufer, komplett
.88 Paßfeder für Lüfter **

4.00 Ständer, komplett
.07 Gehäusefuß
.12 Flanschmutter (BG132...200)
.14 Mutter
.18 Leistungsschild
.19 Schraube
.20 Abdeckung
.30 Kontaktwinkel
.31 Erdungswinkel

5.00 Klemmenkasten, komplett
.02 Zwischenstück (entfällt bei BG180 ... 200)
.03 Dichtung (BG180...200 Schnurdichtung)
.10 Klemmenbrett, komplett
.44 Klemmenkasten-Oberteil
.45 Leitung, vollständig
.53 Verschlußstopfen
.70 Klemmbügel
.71 Klemmbügel
.83 Dichtung (BG180...200 Schnurdichtung)
.84 Klemmenkasten-Deckel
.85 Klemmenkasten-Deckel
.86 Schutzzeichen
.89 Schraube

6.00 Lagerung BS
.10 Wälzlager
.11 Federband für Lagerschildnabe (nicht immer vorhanden)
.20 Lagerschild
.23 Wellendichtring

7.00 Belüftung, komplett**
.04 Lüfter **
.40 Lüfterhaube **
.41 Winkel **

Auf- und Abziehvorrichtungen für Wälzlager, Lüfter und Abtriebselemente sind nicht lieferbar!

ENGLISH

Spare parts, available from the works
(see specimen orders)

1.00 Bearing assembly, drive end
.40 Endshield
.43 Shaft sealing ring
.56 Equalizing ring
.58 Resilient preloading disc
.60 Rolling-contact bearing
.61 Spring band for endshield hub (not always provided)

3.00 Rotor, complete
.88 Featherkey for fan**

4.00 Stator, complete
.07 Frame foot
.12 Flange nut (frame size 132/160)
.14 Nut
.18 Rating plate
.19 Screw
.20 Cover
.30 Contact angle
.31 Earthing angle

5.00 Terminal box, complete
.02 Centrepiece (does not apply to frame sizes 180 ... 200)
.03 Gasket (frame sizes 180 ... 200: cord-type gasket)
.10 Terminal board, complete
.44 Upper part of terminal box
.45 Cable, complete
.53 Plug
.70 Terminal clip
.71 Terminal clip
.83 Gasket (frame sizes 180 ... 200: cord-type gasket)
.84 Cover for terminal box
.85 Cover for terminal box
.86 Protection symbol
.89 Screw

6.00 Bearing assembly, non-drive end
.10 Rolling-contact bearing
.11 Spring band for endshield hub (not always provided)
.20 Endshield
.23 Shaft sealing ring

7.00 Ventilation accessories, complete**
.04 Fan**
.40 Fan cowl**
.41 Angle**

Mounting and extracting devices for rolling-contact bearings, fans and out elements are not available.

FRANÇAIS

Pièces de rechange, livrables par l'usine
(voir exemple de commande)

1.00 Palier côté entraînement
.40 Flasque-palier
.43 Bague d'étanchéité
.56 Rondelle de compensation
.58 Rondelle élastique
.60 Roulement
.61 Lame élastique pour moyeu du flasque (pas toujours présente)

3.00 Rotor, complet
.88 Clavette pour ventilateur **

4.00 Stator, complet
.07 Patte de la carcasse
.12 Ecrou de bride (HA 132...200)
.14 Ecrou
.18 Plaque signalétique
.19 Vis
.20 Recouvrement
.30 Equerre de contact
.31 Equerre de mise à la terre

5.00 Boîte à bornes, complète
.02 Pièce intercalaire (pas sur HA 180... 200)
.03 Joint (torique sur HA 180...200)
.10 Plaque à bornes, complète
.44 Partie supérieure de la boîte à bornes
.45 Câble complet
.53 Bouchon
.70 Etrier de serrage
.71 Etrier de serrage
.83 Joint (torique sur (HA 180...200)
.84 Couvercle de la boîte à bornes
.85 Couvercle de la boîte à bornes
.86 Symbole
.89 Vis

6.00 Palier côté opposé à l'entraînement
.10 Roulement
.11 Lame élastique pour moyeu du flasque (pas toujours présente)
.20 Flasque-palier
.23 Bague d'étanchéité

7.00 Ventilation, complète **
.04 Ventilateur **
.40 Capot du ventilateur **
.41 Equerre **

Les dispositifs d'emmanchement et d'extraction pour roulements, ventilateurs et organes de tranasmission ne sont pas livrables.

ESPAÑOL

Piezas de recambio; suministro desde fábrica (véase ejemplo de pedido).

1.00 Cojinete del LA
.40 Escudo portacojinetes
.43 Retén
.56 Disco de compensación
.58 Arandela de resorte
.60 Rodamiento
.61 Cinta elástica para el cubo del escudo portacojinetes (no se emplea siempre)

3.00 Rotor,completo
.88 Chaveta para ventilador **

4.00 Estator, completo
.07 Pata de la carcasa
.12 Tuerca de la brida (tamaño 132...200)
.14 Tuerca
.18 Placa de características
.19 Tornillo
.20 Tapa
.30 Angular de contacto
.31 Angular exterior de puesta a tierra

5.00 Caja de bornes, completa
.02 Pieza intermedia (no hay en BG 180...200)
.03 Junta (en BG 180...200 obturación trenzada)
.10 Placa de bornes, completa
.44 Parte superior de la caja de bornes
.45 Conductor completo
.53 Tapón
.70 Estribo
.71 Estribo
.83 Junta (en BG 180...200 obturación trenzada)
.84 Tapa de la caja de bornes
.85 Tapa de la caja de bornes
.86 Marca registrada
.89 Tornillo

6.00 Cojinete del LCA
.10 Rodamiento
.11 Cinta elástica para el cubo del escudo portacojinetes (no se emplea siempre)
.20 Escudo portacojinete
.23 Retén

7.00 Ventilación, completa **
.04 Ventilador **
.40 Tapa del ventilador **
.41 Angular**

No se suministran los dispositivos para extraer y calar los rodamientos, el ventilador y los elementos de accionamiento.

ITALIANO

Parti di ricambio, fornibili dalla fabbrica
(vedi esempio)

1.00 Supporto lato comando
.40 Scudo di supporto
.43 Anello torico
.56 Rondella di compensazione
.58 Rondella elastica
.60 Cuscinetto a rotolamento
.61 Nastro elastico per il mozzo dello scudo di supporto (non sempre inserito)

3.00 Rotore, completo
.88 Chiavetta per Ventilatore **

4.00 Statore, completo
.07 Piedino della carcassa
.12 Dado della flangia (BG 132/160)
.14 Dado
.18 Targhetta
.19 Vite
.20 Coperchio
.30 Angolare di contatto
.31 Angolare di messa a terra

5.00 Scatola morsetti, completa
.02 Pezzo intermedio (non presente nei BG180...200)
.03 Guarnizione (nei BG180...200 guarnizione a corda)
.10 Morsettiera completa
.44 Parte superiore della scatola morsetti
.45 Cavetto completo
.53 Tappo
.70 Morsetto di serraggio
.71 Morsetto di serraggio
.83 Guarnizione
.84 Coperchio della scatola morsetti
.85 Coperchio della scatola morsetti
.86 Targhetta (simbolo di protezione)
.89 Vite

6.00 Supporto opposto al lato comando
.10 Cuscinetto a rotolamento
.11 Nastro elastico per il mozzo dello scudo di supporto (non sempre inserito)
.20 Scudo di supporto
.23 Anello torico

7.00 Ventilazione completa**
.04 Ventola **
.40 Cuffia della ventola**
.41 Angolare **

Non sono fornibili i dispositivi di estrazione / calettamento per i cuscinetti, ventilatori ed azionamenti.

SVENSKA

Reservdelar, tillgängliga från
fabriken (se Beställningsexempel)

1.00 Lager för axeltappsidan (A-sidan), komplett
.40 Lagersköld
.43 Tätningsring
.56 Utjämningsbricka
.58 Fjäderbricka
.60 Rullningslager
.61 Fjäderband för lagersköldsnav (finns ej alltid)

3.00 Rotor, komplett
.88 Kil for fläkt **

4.00 Stator, komplett
.07 Fot
.12 Flänsmutter (BG 132/160)
.14 Mutter
.18 Märkplåt
.19 Skruv
.20 Lock
.30 Kontaktvinkel
.31 Jordningsvinkel

5.00 Uttagslåda, komplett
.02 Mellanstycke
.03 Tätning
.10 Kopplingsplint, komplett
.44 Anslutningslåda, överdel
.45 Ledning, komplett
.53 Avslutningspropp
.70 Klämbygel
.71 Klämbygel
.83 Tätning
.84 Lock till uttagslåda
.85 Lock till uttagslåda
.86 Skyddsmärke
.89 Skruv

6.00 Lager för fläktsidan (B-sidan)
.10 Rullningslager
.11 Fjäderband för lagersköldsnav (finns ej alltid)
.20 Lagersköld
.23 Axeltätning

7.00 Fläktkylning, komplett**
.04 Fläkt**
.40 Fläktkåpa **
.41 Vinkel **

På- och avdragare för rullningslager, fläkt och drivdon kan ej erhållas.

Bestellbeispiel / Order example
Exemple de commande
Ejemplo de pedido
Esempio di ordinazione
Beställningsexempel

1LA5 163-4AC70
Nr. E4A6 4567 890001
1.40 Lagerschild

** Teile entfallen bei 1LP5, 1LP9, 1PP5, 1PP9, *1MF5*. Bei 1LC5 s. zugehörige Bremsenbetriebsanleitung.
1LP5, 1LP9, 1PP5, 1PP9, *1MF5* motors don't have these parts. For 1LC5 motors refer to the relevant brake operating instructions.
Certaines piéces sont supprimées pour les types 1LP5, 1LP9, 1PP5, 1PP9, *1MF5*. Pour le type 1LC5, voir instructions de service des freins correspondantes.
Piezas suprimidas en 1LP5, 1LP9, 1PP5, 1PP9, *1MF5*. Para 1LC5 véanse las instrucciones de servicio correspondientes al freno.
Queste parti sono mancanti nei motori di grandezza 1LP5, 1LP9, 1PP5, 1PP9, *1MF5*. Per il motore 1LC v. anche le istruzioni del freno attinenti.
Förekommer ej i 1LP5, 1LP9, 1PP5, 1PP9, *1MF5*. Vid 1LC5, se tillhörande driftsinstruktion för bromsen.

BG 100L . . . 160L

1MA5 1MF5

Klemmenkasten in EEx e-Ausführung
Terminal box in EEx e design
Boîte à bornes in exécution EEx e
Caja de bornes de la ejecución EEx e
Cassetta montata in esecuzione EEx e
Anslutningslåda i explosionsskyddat utförande EEx e

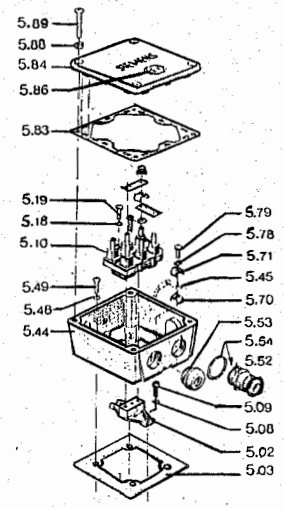

Wahlweise Teflonband für Gewinde
Alternatively use Teflon tape for thread
Envariante, utiliser un ruban de Teflon pour le filetage
A elección, cinta de Teflon para roscas
A scelta, si può anche impiegare nastro di Teflon per la filettatura
Alternative: Teflonband i stället förgänga

1LA5 1LB5 1LP5 1PP5
1LA9 1LP9 1PP9

Klemmenkasten in Normalausführung
Terminal box in standard design
Boîte à bornes en exécution normale
Caja de bornes en ejecución normal
Scatola morsetti in esecuzione normale
Anslutningslåda in normalt utförande

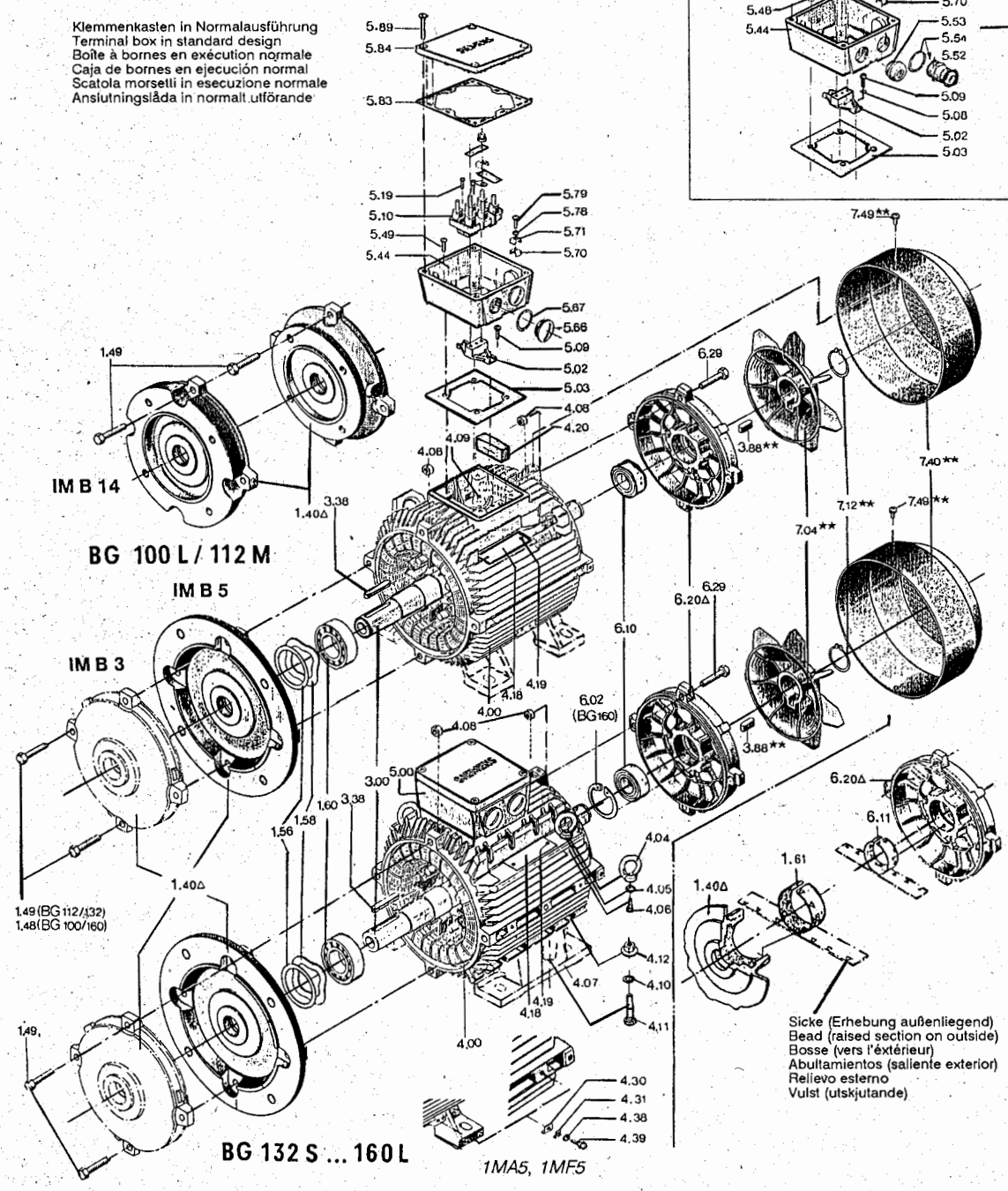

Δ Bei Aluminium-Lagerschilden ist in die Nabe entweder ein Federband (1.61/6.11) eingelegt (Sicke im Freistich einhaken) oder ein Stahlring eingegossen.
With aluminium end shields, either a spring band (1.61/6.11) is inserted (bead hooked in undercut) or a steel ring is cast in the hub.
Les flasques-paliers en aluminium comportent soit une lame élastique (1.61/6.11) introduite de telle manière que le bossage vienne se placer dans la gorge, soit un anneau en acier inséré par coulée.
En el cubo del escudo portacojinetes de aluminio puede haber una banda elástica (1.61/6.11) cuyos abultamientos se enganchan en el canal, o hay embebido un anillo de acero.
Nel mozzo degli scudi in alluminio è stato inserito o un anello in acciaio fuso, o un nastro flessibile (1.61/6.11) il cui rilievo è innestato nelle gole.
I Lagersköldar av aluminium är ett fjäderband (1.61/6.11) antingen inlagt i nevet (vulsten inpassad i underskärningen) eller ingjutet i en stålring.

Fig. 2 +

BG 180M . . . 200L

1LA5 1LB5 1LP5 1PP5
1LA9 1LP9 1PP9

Klemmenkasten in Normalausführung
Terminal box in standard design
Boîte à bornes en exécution normale
Caja de bornes en ejecución normal
Scatola morsetti in esecuzione normale
Anslutningslåda in normalt utförande

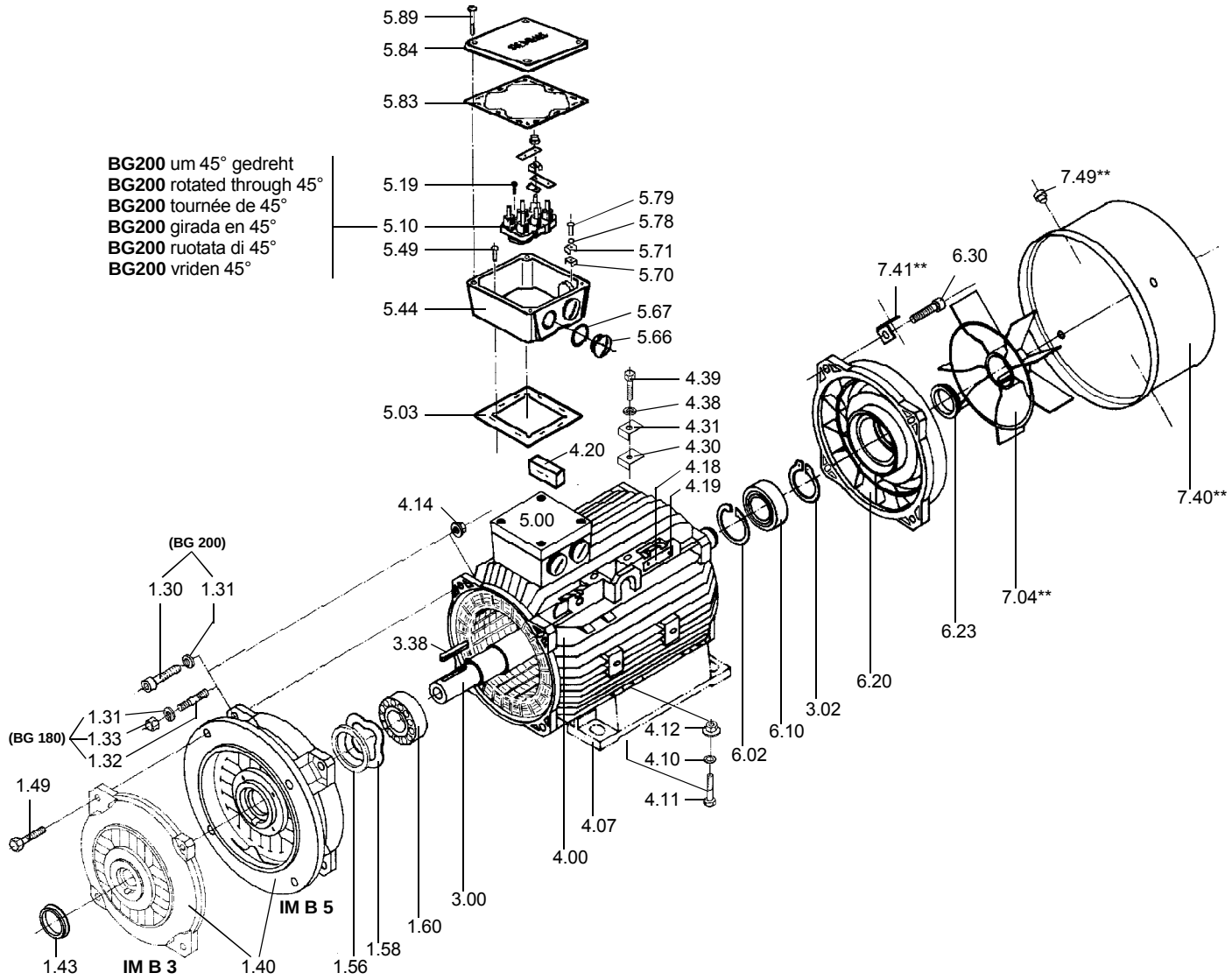

Normteile sind nach Abmessung, Werkstoff und Oberfläche im freien Handel zu beziehen.

Standard commercially available parts are to be purchased in accordance with the specified dimensions, material and surface finish.

Les **pièces normalisées** peuvent être obtenues dans le commerce d'après leurs dimensions, le matériau et l'état de surface.

Las **piezas estándar** se comprarán en comercios del ramo según las dimensiones, material y superficie especificados.

Le **parti standard** sono reperibili sul mercato secondo le dimensioni, il materiale e la finitura della superficie.

Normerade detaljer kan erhållas i öppna handeln, och skall specificeras beträffande storlek, material och ytbehandling.

1.31 5.18
4.10 5.48
4.38 5.78
5.08 5.88
DIN 128

4.05 DIN 137

3.02
7.12
DIN 471

6.02 DIN 472

4.04 DIN 580 DIN 582

1.30
6.30
DIN 912

1.49
4.06
4.11
4.39
5.09
5.19
5.49
5.79
6.29
7.49**
DIN 931 DIN 933

1.33
4.08
DIN 934

1.32 DIN 939

3.38 DIN 6885

1.48 DIN 6912

4.09 DIN 7343
DIN 7344 (BG 112)

5.52
5.54
5.66
5.67
DIN 46320

1.60
6.10
DIN 625
Lagertyp:
Type of bearing:
Type de roulement:
Tipo de cojinete:
Tipo di cuscinetto:
Lagertyp:

Fig. 2

Anschließbare Querschnitt je nach Klemmengröße (ggf. reduziert durch Größe der Leitungseinführungen)
Conductor cross-sections connectable to the various terminals (may be reduced by size of cable entries)
Sections raccordables suivant la taille de la borne (réduction éventuelle par la taille des entrées de câbles)
Sección conectable segùn tamaño del borne (en caso dado, más pequeña debido al tamaño de las entradas de linea)
Diamentri dei collegamenti a sec. delle misure dei morsetti (eventualmente sono ridotte le dimensioni delle aperture per i conduttori)
Anslutningsbara ledarareor för olika klämstorlekar (ev. reducerat med hänsyn till genomföringens storlek)

... 25 mm²

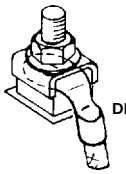

Bei Anschluß mit DIN- Kabelschuh ist dieser nach unten abzuwinkeln!

If connections are made with DIN cable lugs, bend the cable lugs downwards.

Lorsque le raccordement est réalisé par cosses DIN, celles-ci doivent être pliées vers le bas.

Si la conexión se efectúa con terminales para cables DIN, habrá que doblarlos hacia abajo.

Nel collegamento con capocorda conforme alle norme DIN, questo va piegato verso il basso.

Vid anslutning med kabelsko enl. DIN skall denna bockas nedåt.

... 10 mm²

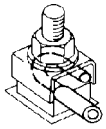

Anschluß eines einzelnen Leiters mit Klemmbügel.

Connecting a single conductor with a terminal clip.

Raccordement d'un seul conducteur à une borne à étrier.

Conexión de un solo conductor con un estribo.

Allacciamento di ogni singolo conduttore con morsetto di serraggio.

Anslutning av en enkelledare med klämbygel.

... 25 mm²

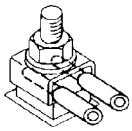

Anschluß von zwei etwa gleich dicken Leitern mit Klemmbügel.

Connecting two conductors of almost equal thickness with a terminal clip.

Deux conducteurs de diamètre à peu pré équivalents, raccordés à une borne à étrier.

Conexión de dos conductores de diámetro aproximadamente igual, con un estribo.

Allacciamento di due conduttori di stesso o pressocchè indentico spessore con morsetto di serraggio.

Anslutning av två ungefär lika tjocka ledare med klämbygel.

Fig. 3.1

... 10 mm²

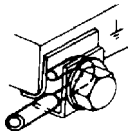

Anschluß eines einzelnen Leiters unter äußerem Erdungswinkel.

Connecting a single conductor under the outer earthing angle.

Raccordement d'un seul conducteur à une équerre extérieure de mise à la terre.

Conexión de un solo conductor bajo el angular exterior de puesta a tierra.

Allacciamento di ogni singolo conduttore sotto angolare di messa a terra esterno.

Anslutning av en enkelledare under extern jordningsvinkel.

... 25 mm²

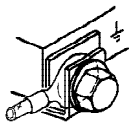

Bei Anschluß mit DIN- Kabelschuh unter äußerem Erdungswinkel.

If connections are made with DIN cable lugs, under the outer earthing angle.

Lorsque le raccordement est réalisé par cosses DIN, à une équerre extérieure de mise à la terre.

Si la conexión se efectúa con terminales para cables DIN, bajo el angular exterior de puesta a tierra.

Nel collegamento con capocorda conforme alle norme DIN, sotto angolare di messa a terra esterno.

Vid anslutning med kabelsko enl. DIN under extern jordningsvinkel.

Fig. 3.2

Anziehdrehmomente für Schraubenverbindungen der elektrischen Anschlüsse - Klemmenbrettanschlüsse (außer Klemmenleisten)
Tightening torques for screwed electrical connections - terminal board connections (except for terminal strips)
Couples de serrages des bornes de la plaque à bornes (ne concerne pas les borniers)
Pares de apriete para uniones atornilladas de las conexiones eléctricas en la placa de bornes (exceptuando las regletas de bornes).
Coppie di serraggio per le viti di attacco di collegamenti elettrici / dei portamorsetti (escluse morsettiere)
Åtdragningsmoment för de elektriska anslutningarnas skruvförband (utom på kontaktplintar)

Gewinde- Æ / Thread- Æ Æ du filetage / Æ de la rosca Diametro del filetto / Gängdimeter		M4	M5	M6	M8	M10	M12	M16
Anziehdrehmoment Tightening torque Couple de serrage Par de apriete Coppia di serraggio Åtdragningsmoment	N m min	0,8	1,8	2,7	5,5	9	14	27
	N m max	1,2	2,5	4	8	13	20	40

Die obigen Anziehdrehmomente gelten soweit keine anderen Werte angegeben sind!
The above values of tightening torque are applicable unless alternative values are given elsewhere.
Les couples de serrage indiqués ci-dessus sont valables pour autant qu'aucune valeur spécifique ne soit donnée.
Estos pares de apriete rigen mientras no se indiquen otros.
Le coppie di serraggio indicate qui di sopra sono valide se non sono indicati altri valori.
Ovanstående åtdragningsmoment gäller om ej andra värden angivits!

Fig. 4

Ausführung mit seitlich angeordnetem Klemmenkasten / Motor version with side-mounted terminel box
Version avec boite à bornes sur le côté / Ejecución con caja de bornes lateral
Esecuzione con cassetta morsetti diposta lateralmente / Utförande med uttagslådan placerad på sidan

BG 100L ... 112M

BG 132S ... 160L

BG 180M ... 200L

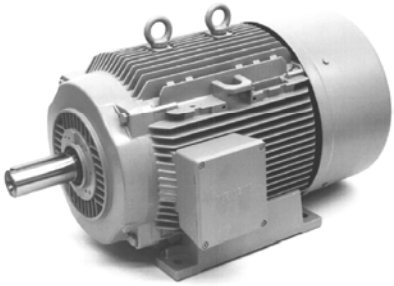

Fig. 5

BG = Baugrößen / Frame sizes / Désignation de carcasse / Tamaños constructivos / Grandezze / Utföringsstorlekar

Lagerwechsel / Changing bearings / Remplacement des roulements
Cambio de cojinetes / Sostituzione del cuscinetto / Lagerbyte

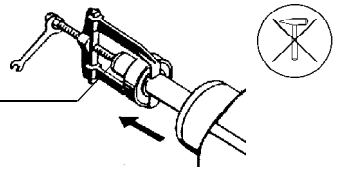

Fig. 6

Auf- und Abziehen von Abtriebselementen / Pressing on and pulling off drive elements
Emmanchement et extraction d'organes de transmission / Calado y extracción de elementos de accionamiento
Calettamento ed estrazione degli elementi di azionamento / På- och avdragning av drivdon

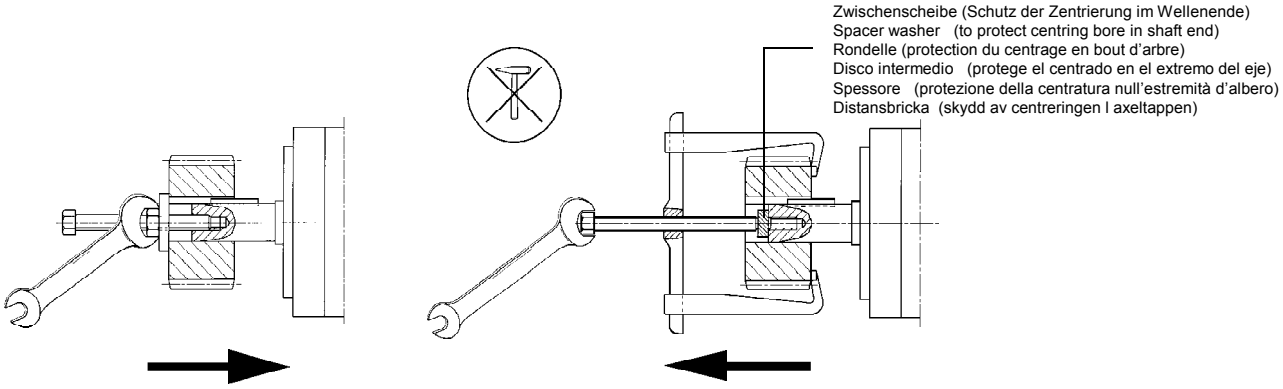

Zum Aufziehen von Abtriebselementen (Kupplung, Zahnrad, Riemenscheibe usw.), Gewinde im Wellenende benutzen und - sofern möglich - Abtriebselemente nach Bedarf erwärmen. Zum Abziehen geeignete Vorrichtung verwenden. Es dürfen beim Auf- und Abziehen keine Schläge (z.B. mit Hammer oder ähnlichem) oder größere als die laut Katalog zulässigen radialen oder axialen Kräfte über das Wellenende auf die Motorlager übertragen werden.

Use the tapped hole provided in the end of the shaft for fitting drive components such as couplings, gearwheels, belt pulleys, etc. and, if possible, heat the components as necessary. Use a suitable puller tool for removing the components. Do not strike the components, e.g. with a hammer or similar tool, when fitting or removing them and do not exert more than the maximum value of radial or axial force - according to the catalog - transmitted to the motor bearings through the shaft extension.

Pour monter les organes de transmission (accouplements, roues dentées, poulies à courroie, etc.), utiliser le taraudage du bout d'arbre. Au besoin et lorsque cela est possible, chauffer les organes de transmission. Pour le démontage, utiliser un dispositif approprié. Aucun coup (par ex. marteau) supérieur aux efforts axiaux et radiaux admissibles mentionnés au catalogue ne doit être transmis par l'arbre aux roulements en cours de montage ou de démontage.

Para calar los elementos de accionamiento (acoplamientos, rueda dentada, polea, etc.) utilizar la rosca en el extremo del eje y - siempre que sea posible - calentar convenientemente dichos elementos. Utilizar el dispositivo adecuado para la extracción. Durante las operaciones de calado o extracción no golpear (p. ej. con martillo o similar) ni ejercer sobre los cojinetes del motor a través del extremo del eje fuerzas axiales o radiales superiores a las admisibles según catálogo.

Per calettare gli elementi di azionamento (giunti, ruote dentate, pulegge, ecc.), utilizzare il foro filettato nell'estremità d'albero e, se possibile, riscaldare gli elementi di azionamento. Per l'estrazione vanno adoperati attrezzi adatti. Sono da evitare colpi o martellate, e forze radiali o assiali trasmesse dall'estremità d'albero ai cuscinetti che siano maggiori di quelle consentite sec. il catalogo.

Använd axeltappens gänga vid pådragning av drivdon (koppling, kugghjul, remskiva etc) och värm om möjligt upp drivdonen om så behövs. Använd lämpliga verktyg för avdragningen. Några slag (t.ex. med hammare e.dyl.) får aldrig förekomma vid på- och avdragning, och radiella och axiella krafter som är större än de som anges i katalogen får inte överföras till motorlagren via axeltappen.

Fig. 7

Auswuchtung mit halber Paßfeder / Balancing with half featherkey
Equilibrage avec demi-clavette / Equilibrado con media chaveta
Equilibratura con mezza chiavetta / Balansering med halv kil

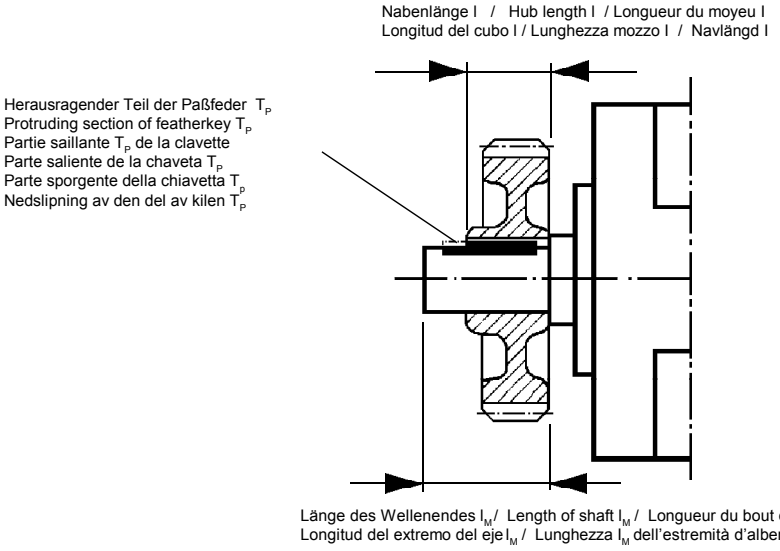

Fig. 8

Änderungen vorbehalten/ Subject to change without prior notice/ Sous réserve de modifications/ Sujeto a modificaciones/ Con riserva di eventuali modifiche/ Förbehåll för ändringar

Geschäftsgebiet **Antriebstechnik / Drives Systems Division**
Geschäftszweig **Niederspannungsmotoren / Subdivision Low-Voltage Motors**
D-97615 Bad Neustadt an der Saale

Antriebs-, Schalt- und Installationstechnik von Siemens

Siemens Aktiengesellschaft

Bestell-Nr. / Order No.: 610.42348.21.a
Printed in the Federal Republic of Germany
AG 01 94 MA 20 De-En-Fr-Sp-It-Sv

SIEMENS

CE

Sicherheits- und Inbetriebnahmehinweise für Niederspannungs-Asynchronmotoren

(gemäß Niederspannungsrichtlinie 73/23/EWG)

Typ: **1LA, 1LB, 1LC, 1LD, 1LF, 1LG, 1LL, 1LN, 1LP, 1LS, 1LT, 1LV, 1PB, 1PF, 1PK, 1PP, 1PQ, 1PR**

Achshöhe: 56 bis 450 mm

1 Allgemein

Elektromotoren haben gefährliche, spannungsführende und rotierende Teile sowie möglicherweise heiße Oberflächen. Alle Arbeiten zum Transport, Anschluß, zur Inbetriebnahme und regelmäßige Instandhaltung sind von **qualifiziertem, verantwortlichem Fachpersonal** auszuführen (VDE 0105; IEC 364 beachten). Unsachgemäßes Verhalten kann schwere **Personen- und Sachschäden** verursachen. Die jeweils geltenden **nationalen, örtlichen** und **anlagespezifischen Bestimmungen und Erfordernisse** sind zu berücksichtigen.

2 Bestimmungsgemäße Verwendung

Diese Motoren sind für gewerbliche Anlagen bestimmt.Sie entsprechen den harmonisierten Normen der Reihe **EN 60034 (VDE 0530).** Der Einsatz im **Ex-Bereich** ist **verboten**, sofern nicht **ausdrücklich** hierfür vorgesehen (Zusatzhinweise beachten). Falls im Sonderfall - bei Einsatz in **nicht** gewerblichen Anlagen - erhöhte Anforderungen gestellt werden (z. B. Berührungsschutz gegen Kinderfinger), sind diese Bedingungen bei der Aufstellung anlagenseitig zu gewährleisten.
Die Motoren sind für Umgebungstemperaturen von **-20°C bis +40°C** sowie Aufstellungshöhen ≤ **1000 m** über NN bemessen. Abweichende Angaben auf dem Leistungsschild **unbedingt** beachten.Die Bedingungen am Einsatzort müssen **allen** Leistungsschildangaben entsprechen.

Niederspannungsmotoren sind **Komponenten** zum Einbau in Maschinen im Sinne der Maschinenrichtlinie 89/392/EWG. Die **Inbetriebnahme** ist solange untersagt, bis die Konformität des Endproduktes mit dieser Richtlinie festgestellt ist (EN 60204-1 beachten).

3 Transport, Einlagerung

Nach der Auslieferung festgestellte **Beschädigungen** dem Transportunternehmen sofort mitteilen; die **Inbetriebnahme** ist ggf. **auszuschließen**. Eingeschraubte Transportösen fest anziehen. Sie sind für das Gewicht des Motors ausgelegt, **keine** zusätzlichen Lasten anbringen. Wenn notwendig, geeignete, ausreichend bemessene Transportmittel (z. B. Seilführungen) verwenden.
Vorhandene **Transportsicherungen** vor Inbetriebnahme **entfernen.** Für weitere Transporte erneut verwenden. Werden Motoren eingelagert, auf eine **trockene, staubfreie** und **schwingungsarme** (v_{eff} ≤ 0,2 mm/s) Umgebung achten (Lagerstillstandsschäden). Bei längerer Einlagerungszeit verringert sich die Fettgebrauchsdauer der Lager. Vor Inbetriebnahme Isolationswiderstand messen. Bei Werten ≤ 1kΩ je Volt Bemessungsspannung Wicklung trocknen.

4 Aufstellung

Auf gleichmäßige Auflage, gute Fuß- bzw. Flanschbefestigung und genaue Ausrichtung bei direkter Kupplung achten. Aufbaubedingte Resonanzen mit der Drehfrequenz und der doppelten Netzfrequenz vermeiden. Läufer **von Hand** drehen, auf ungewöhnliche Schleifgeräusche achten. **Drehrichtung** im ungekuppelten Zustand **kontrollieren** (Abschnitt 5 beachten).
Abtriebselemente (Riemenscheibe, Kupplung ...) nur mit geeigneten Vorrichtungen auf- bzw. abziehen (Erwärmen!) und mit einem Berührungsschutz abdecken. Unzulässige Riemenspannungen vermeiden (Katalog, Techn. Liste).
Der **Wuchtzustand** ist auf dem Wellenspiegel oder Leistungsschild angegeben (**H** = Halb-, **F** = Vollkeilwuchtung). Bei Montage des Abtriebselementes auf Wuchtzustand achten! Bei Halbkeilwuchtung **überstehenden sichtbaren** Paßfederanteil abarbeiten.
Bei Bauformen mit Wellenende nach unten wird ein Schutzdach empfohlen, bei Wellenende nach oben ist **bauseits** eine Abdeckung vorzusehen, die das Hineinfallen von Fremdkörpern in den Lüfter verhindert.
Belüftung nicht behindern! Abluft - auch benachbarter Aggregate - darf nicht unmittelbar wieder angesaugt werden.

5 Elektrischer Anschluß

Alle Arbeiten dürfen nur von **qualifiziertem Fachpersonal** am **stillstehenden** Motor im **freigeschalteten** und **gegen Wiedereinschalten gesicherten** Zustand vorgenommen werden. Dies gilt auch für Hilfsstromkreise (z.B. Stillstandsheizung).

Spannungsfreiheit prüfen !

Überschreiten der **Toleranzen in EN 60034 - 1 / IEC 34-1** - Spannung ±5%, Frequenz ±2%, Kurvenform, Symmetrie - erhöht die Erwärmung und beeinflußt die elektromagnetische Verträglichkeit. Leistungsschildangaben sowie das Anschlußschema im Anschlußkasten beachten.
Der Anschluß muß so erfolgen,daß eine **dauerhaft sichere**, elektrische Verbindung aufrecht erhalten wird (keine abstehenden Drahtenden); zugeordnete Kabelendbestückung verwenden. Sichere **Schutzleiterverbindung** herstellen.

Anziehdrehmomente für Klemmenplatten-Anschlüsse

	Gewinde- ∅	M4	M5	M6	M8	M10
	Anziehdreh-moment [Nm]	0,8...1,2	1,8...2,5	2,7...4	5,5...8	9...13

Luftabstände zwischen blanken, spannungsführenden Teilen untereinander und gegen Erde ≥ 5,5 mm (U_N ≤ 690 V) .

Im Anschlußkasten dürfen sich **keine** Fremdkörper, Schmutz sowie Feuchtigkeit befinden. Nicht benötigte Kabeleinführungsöffnungen und den Kasten selbst **staub-** und **wasserdicht** verschließen.
Für den Probebetrieb ohne Abtriebselemente **Paßfeder sichern**.
Bei Motoren mit Bremse vor der Inbetriebnahme die einwandfreie Funktion der Bremse prüfen.

6 Betrieb

Schwingstärken v_{eff} ≤ 3,5 mm/s (P_N ≤15 kW) bzw. v_{eff} ≤ 4,5 mm/s (P_N > 15 kW) sind im gekuppelten Betrieb unbedenklich.
Bei Veränderungen gegenüber dem Normalbetrieb - z.B. **erhöhte Temperaturen, Geräusche, Schwingungen** - ist im **Zweifelsfall** der Motor abzuschalten. Ursache ermitteln, eventuell Rücksprache mit dem Hersteller. Schutzeinrichtungen auch im Probebetrieb nicht außer Funktion setzen.
Bei starkem Schmutzanfall Luftwege regelmäßig reinigen. Vorhandene verschlossene **Kondenswasserlöcher** von Zeit zu Zeit öffnen!

Bei Motoren **ohne Nachschmiereinrichtung** Lager- bzw. Fettwechsel nach Herstellerangaben, spätestens jedoch nach 3 Jahren. Lagerung **mit Nachschmiereinrichtung** bei laufendem Motor nachfetten. Schmierschild beachten!
Bei Motoren mit Fremdbelüftung muß der Fremdlüfter bei Betrieb eingeschaltet sein.

7 Weitere Informationen

Informationen über eventuelle Zusatzeinrichtungen sind zu beachten! Weitere Einzelheiten enthalten unsere ausführlichen Betriebs- und Instandhaltungsanleitungen (DEUTSCH / ENGLISH / FRANÇAIS / ESPAÑOL / ITALIANO / SVENSKA). Sie werden Ihnen auf Wunsch, unter Angabe des Typs und der Maschinen-Nummer, zugeschickt.

Diese Sicherheits- und Inbetriebnahmehinweise sind aufzubewahren!

Ausgabe / Edition 11.98
© Siemens AG 1995 All Rights Reserved

Bestell - Nr. / Order No.: 610.43 423.34.b
DEUTSCH / ENGLISH / FRANÇAIS / ESPAÑOL / ITALIANO / SVENSKA
NEDERLANDS / PORTUGUÊS / ΕΛΛΗΝΙΚΑ / DANSK / SUOMI / ČESKY

SIEMENS

CE

ENGLISH

Information on safety and commissioning for low voltage asynchronous motors

(in accordance with L. V. directive 73/23/EEC)

Types: **1LA, 1LB, 1LC, 1LD, 1LF, 1LG, 1LL, 1LN, 1LP, 1LS, 1LT, 1LV, 1PB, 1PF, 1PK, 1PP, 1PQ, 1PR**

Shaft height: 56 to 450 mm

1 General information

Electric motors have dangerous voltage-carrying and rotating components as well as surfaces that may become hot. All work involved in the transport, connection, commissioning and regular maintenance must be carried out by **qualified, responsible specialists** (note VDE 0105; IEC 364). Improper behaviour may result in serious **injury** and **damage to property**. The applicable **national, local** and **works regulations** and **requirements** must be complied with.

2 Intended use

These motors are intended for commercial installations. They comply with the harmonized standards of the **EN60034 (VDE 0530)** series. Utilization in areas subject to **explosion hazard is not permitted**, unless **expressly intended** for this purpose (see additional notes). In certain special cases, for example, on use in non-commercial installations, if requirements are more strict (e.g. protection against contact with children's fingers), it is the responsibility of the customer to ensure compliance on installing the equipment.
The motors are rated for ambient temperatures of **-20°C to +40°C** and site altitudes ≤ **1000 m** above sea level. Any contradictory information on the rating plate **must** be observed. The conditions on site **must** correspond to all rating plate specifications.

Low voltage motors are **components** for installation in machinery in terms of the Machine directive 89/392/EEC. **Commissioning** must not take place until it has been proved that the end product conforms with this guideline (please note EN 60204-1).

3 Transport and storage

Any **damage** detected after dispatch should be reported immediately to the transport company and **commissioning** must be postponed. Tighten the eyebolts. They are designed for the weight of the motor only therefore do not attach any additional loads. If necessary, use suitable, adequately dimensioned transporting equipment (e.g. rope guides).
Remove existing **shipping braces** before commissioning; and reuse for subsequent transport. If motors are stored, a **dry**, **dust-free** and **low vibration** (v_{rms} ≤ 0.2 mm/s) environment is important (to avoid bearing standstill damage). On long-term storage, the regrease interval of the bearings is reduced.
Before commissioning, measure the impedance of the insulation. If values ≤1kΩ per volt of rated voltage are measured, the windings must be dried out.

4 Installation

Ensure an even underlying surface, good foot or flange fixing and precise alignment for direct coupling. It is important to ensure that the mounting conditions do not cause resonance with the rotational frequency and the doubled supply frequency. Turn the rotor **by hand** and listen for any unusual grinding noises. **Check** the **direction of rotation** in the decoupled state (note section 5).
Only mount or remove drive components (belt pulley, coupling, etc.) using suitable tools (heat up), and cover to shield against contact. Avoid unpermissible belt tensions (see catalogue and technical data). The **balancing type** is specified on the shaft end face or rating plate (**H** = half- and **F** = full-key balancing). On mounting the drive, note the balancing type! In the case of half key balancing, the **protruding, visible part** of the half-featherkey must be removed.
A canopy is recommended for designs with the shaft end pointing downwards, and with the shaft end pointing upwards a cover must be **provided by the customer** to prevent foreign bodies from falling into the fan.
Do not obstruct ventilation! Discharged air, also from neighbouring equipment, must not be sucked in again immediately.

5 Electrical connection

Work is only permitted to be carried out by **qualified specialists** on the **stationary motor**, while **disconnected** and **prevented from being switched on again**. This also applies for the auxiliary power circuits (e.g. Anti-condensation heaters).

Check that the equipment is potential-free!

If the **tolerance limits** are exceeded that are specified in **EN 60034, part 1 / IEC 34-1** (voltage ± 5%, frequency ± 2%, shape of curve, symmetry) the heating effect is increased and the electromagnetic compatibility is affected. Please note the specifications on the rating plate and the connection diagram in the terminal box.
Connections must be made in such a way as to ensure that a **permanently** safe electrical connection is maintained (no protruding wire ends); use the corresponding cable end pieces. Create a **safe earth continuity connection**.

Tightening torques for terminal board connections

	Thread ∅	M4	M5	M6	M8	M10
	Tightening torque [Nm]	0,8...1,2	1,8...2,5	2,7...4	5,5...8	9...13

Clearences in air between bare live parts themselves and between bare live parts and earth must be ≥ 5,5 mm (U_{rated} ≤ 690 V) .

It must be ensured that the terminal box does not contain **foreign** bodies, dirt or humidity. Seal any unused cable entry openings against **dust** and **water**.
Secure the **featherkey** on test operation without drive components. For motors with brakes, check that the brakes are operating perfectly before commissioning.

6 Operation

Vibration levels of v_{rms} ≤ 3.5 mm/s (P_N ≤ 15 kW) or v_{rms} ≤ 4.5 mm/s (P_N > 15 kW) are quite acceptable in the coupled state.
If deviations from normal operation occur - e.g. **increased temperatures, noises, vibration** - the motor should be **switched off** in the event of doubt. Determine the causes and contact the manufacturer if necessary. Do not disconnect protective equipment, even under test operation.
Under dirty operating conditions, clean the air channels regularly. Open any closed **condensate water** holes from time to time!

For motors **without regreasing facilities**, bearing or grease replacement must be carried out in accordance with the manufacturer's instructions, or after 3 years, whichever is sooner.
Bearings **with regreasing facilities** must be regreased when the motor is running. Please note the greasing plate!
In the case of **motors with separate ventilation**, the separately-driven fan must be switched on throughout motor operation.

7 Further information

Information provided about any additional equipment must be noted! More information is available in our detailed operating and maintenance instructions (DEUTSCH / ENGLISH / FRANÇAIS / ESPAÑOL / ITALIANO/ SVENSKA). They will be sent on request if the machine type and number are also stated.

These notes on safety and commissioning must be retained for future reference!

SIEMENS

CE

FRANÇAIS

Consignes de sécurité et de mise en service pour moteurs asynchrones à basse tension

(selon directive basse tension 73/23/CEE)

Type: **1LA, 1LB, 1LC, 1LD, 1LF, 1LG, 1LL, 1LN, 1LP, 1LS, 1LT, 1LV, 1PB, 1PF, 1PK, 1PP, 1PQ, 1PR**

Hauteur d'axe: 56 à 450 mm

1 Généralités

Les moteurs électriques comportent des pièces dangereuses, sous tension ou rotatives, et éventuellement des surfaces portées à haute température. Tous les travaux de manutention, raccordement, mise en service et entretien régulier sont à exécuter par des **personnes qualifiées responsables** (respecter VDE 0105; CEI 364). Un comportement inapproprié peut occasionner des **blessures** graves et des **dommages matériels** importants. Il convient de respecter les **normes et dispositions nationales**, **locales** et **spécifiques de l'établissement**.

2 Utilisation conforme

Ces moteurs sont destinés à l'emploi industriel. Ils sont conformes aux normes harmonisées de la série **EN60 034 (VDE 0530)**. L'utilisation en **atmosphère explosible** est **interdite**, sauf autorisation **expresse** (consignes complémentaires). Si des emplois particuliers – dans des établissements **non** industriels – imposent des contraintes de sécurité plus sévères (ex. protection contre les contacts de doigts d'enfant), les mesures de protection sont à prendre par le client au moment de l'installation.
Les moteurs sont conçus pour des températures ambiantes de **-20°C à +40°C** et une altitude d'installation ≤ **1000 m**. Respecter impérativement les indications divergentes sur la plaque signalétique. Les conditions sur le site doivent être conformes **en tout point** avec les indications de la plaque signalétique.

Les moteurs à basse tension sont des **composants** à intégrer dans des machines au sens de la directive machines 89/392/CEE. La **mise en service** est interdite tant que la conformité du produit fini avec cette directive n'est pas constatée (EN 60204-1).

3 Transport, entreposage

Notifier immédiatement au transporteur les **endommagements** constatés après la livraison, **ajourner** éventuellement la **mise en service**. Serrer fortement les oeillets de levage vissés. Ils sont dimensionnés pour le poids du moteur ; ne **pas** y accrocher **de charge** supplémentaire. Si nécessaire, utiliser des moyens de manutention appropriés suffisamment dimensionnés (ex. guide-élingue).
Avant la mise en service, **enlever** les **protections pour le transport**. Les conserver pour une réutilisation ultérieure éventuelle. Pour l'entreposage des moteurs, veiller à un environnement **sec**, **non poussiéreux** et **exempt de vibrations** (v_{eff} ≤ 0,2 mm/s) (dégradation des roulements à l'arrêt). Un entreposage de longue durée réduit la durée d'utilisation de la graisse des roulements.
Avant la mise en service, mesurer la résistance d'isolement. Sécher les enroulements si les valeurs mesurées sont ≤ 1kΩ par volt de tension assignée.

4 Installation

Veiller à un appui plan, à une bonne fixation des pattes ou de la bride et à un alignement précis des lignes d'arbres en cas d'accouplement direct. Eviter les résonances à la simple ou double fréquence de rotation dues aux conditions de montage. Tourner le rotor **à la main** pour déceler d'éventuels bruits de frottement anormaux. **Contrôler** le **sens de rotation** à l'état désaccouplé (voir chap. 5)
Ne monter et démonter les organes de transmission (poulie, accouplement, ...) qu'avec les dispositifs appropriés (en chauffant !) et les placer sous carter de protection. Tendre les courroies aux valeurs prescrites (catalogue, liste technique).
Le **mode d'équilibrage** est inscrit en bout d'arbre ou sur la plaque signalétique (**H** = demi-clavette, **F** = clavette entière). En tenir compte lors du montage de l'organe de transmission ! Dans le cas de l'équilibrage avec demi-clavette, supprimer les parties visibles de la clavette **qui font saillie.**

Un auvent est recommandé pour les formes de constructions à bout d'arbre vers le bas ; si le bout d'arbre est dirigé vers le haut, l'utilisateur devra prévoir un recouvrement pour empêcher la chute de corps étrangers dans le ventilateur.
Ne pas entraver la ventilation : l'air évacué – aussi de machines voisines – ne doit pas être directement réaspiré.

5 Raccordement électrique

Tous les travaux ne doivent être réalisés que par des **personnes qualifiées** sur le moteur à **l'arrêt, hors tension** et **condamné**. Ceci s'applique aussi aux circuits auxiliaires (ex. chauffage à l'arrêt).

Vérifier l'absence de tension !

Le dépassement des **tolérances** spécifiées dans **EN 60034 , partie 1 / CEI 34-1** – tension ± 5%, fréquence ±2%, forme d'onde, symétrie – accroît l'échauffement et influe sur la compatibilité électromagnétique.
Respecter les indications de la plaque signalétique ainsi que le schéma de branchement dans la boîte à bornes.
Le branchement est à réaliser de façon à établir une liaison électrique **à sécurité durable** (pas d'extrémités de fils en l'air) ; équiper en conséquence les extrémités des conducteurs. Etablir des **connexions sûres du conducteur de protection.**

Couples de serrage des connexions sur la plaque à bornes

	Diamètre fitetage	M4	M5	M6	M8	M10
	Couple de serrage [Nm]	0,8...1,2	1,8...2,5	2,7...4	5,5...8	9...13

Distances dans l'air des parties nues sous tension entre elles et par rapport à la terre ≥ 5,5 mm (U_N ≤ 690 V).

La boîte à bornes doit être **exempte** de corps étrangers, de saletés et d'humidité. Fermer **hermétiquement** les entrées de câbles inutilisées et la boîte à bornes elle-même.
Pour la marche d'essai sans organes de transmission, **assujettir la clavette à l'arbre.** Sur les moteurs avec frein vérifier le fonctionnement correct du frein avant la mise en service.

6 Fonctionnement

Les vibrations v_{eff} ≤ 3,5 mm/s (P_N ≤ 15 kW) ou v_{eff} ≤ 4,5 mm/s (P_N > 15 kW) sont inoffensives à l'état accouplé. Si l'on constate des conditions divergentes du régime normal – ex. **suréchauffement, bruit, vibrations** – arrêter le moteur **en cas de doute**. Déterminer la cause ; consulter éventuellement le constructeur. Ne pas rendre inopérant les dispositifs de protection, même pas en marche d'essai.
En atmosphère sale et poussiéreuse, nettoyer régulièrement les circuits d'air. Ouvrir de temps à autre les **purgeurs de condensat**.

Sur les moteurs **sans graisseur**, remplacer les roulements ou la graisse en se conformant aux indications du constructeur, et au plus tard après trois ans.
Sur les moteurs **avec graisseur**, graisser les roulements en marche. Respecter les indications de la plaquette de graissage !
Dans le cas de **moteurs à refroidissement séparé**, le motoventilateur doit être en marche lors du fonctionnement du moteur.

7 Informations complémentaires

Respecter les informations relatives aux éventuels équipements additionnels ! Vous trouverez d'autres détails dans nos instructions de service et de maintenance (DEUTSCH/ENGLISH/FRANÇAIS/ ESPAÑOL/ITALIANO/SVENSKA). Nous vous les faisons parvenir sur indication du type et du numéro de machine.

Conserver soigneusement les présentes consignes de sécurité et de mise en service !

SIEMENS

ESPAÑOL

CE

Advertencias de seguridad y de puesta en marcha para motores asíncronos de baja tensión (según las Directrices para baja tensión 73/23/CEE)

1 Generalidades

Los motores eléctricos tienen piezas, peligrosas, bajo tensión y en movimiento así como posiblemente superficies a alta temperatura. Todos los trabajos de transporte, conexión, puesta en marcha y mantenimiento periódico han de ser realizados **por personal especializado y cualificado responsable** (observar VDE 0105; IEC 364). Un comportamiento inadecuado puede producir graves **lesiones y daños materiales**. Es necesario respetar **las normas y disposiciones vigentes nacionales, locales y específicas de la instalación**.

2 Utilización conforme

Estos motores están destinadas a instalaciones industriales. Cumplen con las normas armonizadas de la serie **EN60034 (VDE 0530)**. Está **prohibida** su aplicación **en recintos expuestos al peligro de explosiones (Ex)** a no ser que se hayan destinado **expresamente** a este efecto (observar las advertencias adicionales). Si en casos especiales, cuando se utilizan en recintos **no** industriales, se imponen exigencias de seguridad más severas (p. ej., protección contra contactos involuntarios con dedos de niño), la responsabilidad corre a cargo del instalador.
Los motores se han diseñado para temperaturas ambiente de **-20°C a +40°C** y una altura de instalación de hasta **1000** m.s.n.m. Es **imprescindible** observar los datos en la placa de características. Las condiciones en el lugar de emplazamiento deben coincidir con **todas** las indicaciones en dicha placa.

Los motores de baja tensión son **componentes** para incorporar en máquinas según la Directiva para máquinas 89/392/CEE. Está prohibida la **puesta en marcha** hasta tanto no se haya comprobado que el producto final cumple con dicha Directiva (observar EN 60204-1).

3 Transporte, almacenamiento

Los **daños** constatados después del suministro han de comunicarse inmediatamente a la agencia de transporte; en caso dado habrá que **impedir la puesta en marcha.** Apretar fuertemente los cáncamos utilizados para el transporte. Están diseñados para soportar el peso del motor por lo que no se ha de añadir ningún peso adicional. De ser necesario, utilizar medios de transporte idóneos (p. ej. guías de cable).
Los **seguros de transporte** habrán de retirarse antes de la puesta en marcha. Volver a utilizarlos para otros transportes. Si han de almacenarse los motores y para evitar daños de parada de los rodamientos, cuidar que el ambiente sea **seco, libre de polvo y con pocas vibraciones** ($v_{ef} \leq 0{,}2$ mm/s). El almacenamiento prolongado acorta la vida útil de la grasa de los rodamientos.
Antes de la puesta en marcha medir la resistencia del aislamiento. Si el valor es $\leq 1k\Omega$ por voltio de la tensión asignada, secar los devanados.

4 Instalación

Cuidar que la conformación de los cimientos, que la fijación de las patas y de las bridas sea óptima y que la alineación sea exacta en el caso de acoplamiento directo. Evitar las resonancias a la frecuencia simple o doble de rotación causadas por las condiciones de montaje.
Girar a **mano** el rotor y observar si se oyen ruidos de rozamiento anómalos. **Controlar la dirección de giro** en estado desacoplado (ver el apartado 5).
Calar o extraer los elementos de transmisión (polea, acoplamiento ...) sólo con el dispositivo adecuado (¡en caliente!) y cubrirlos con una protección contra contactos involuntarios. Tensar las correas a los valores prescritos (v. Catálogo, lista de datos técnicos).
En la superficie del eje o en la placa de características está indicado el **modo de equilibrado** (**H** = media chaveta, **F** = chaveta entera). Observar el modo de equilibrado al montar el elemento de transmisión. Si el equilibrado es con media chaveta, eliminar las partes visibles de la chaveta que sobresalen.

Tipo: **1LA, 1LB, 1LC, 1LD, 1LF, 1LG, 1LL, 1LN, 1LP, 1LS, 1LT, 1LV, 1PB, 1PF, 1PK, 1PP, 1PQ, 1PR**

Altura del eje: 56 ... 450 mm

En los modelos con el extremo del eje hacia abajo se recomienda un techo de protección; en los modelos con el extremo del eje hacia arriba **el usuario** deberá prever un recubrimiento para evitar que puedan penetrar cuerpos extraños en el ventilador.
¡No impedir la ventilación! Evitar la aspiración directa del aire expulsado, también la de máquinas vecinas.

5 Conexión eléctrica

Todos los trabajos deben ser realizados por **personal cualificado** en motores **parados,** que han sido **aislados** de la red y **asegurados contra la reconexión (condenado).** Esto rige también para los circuitos auxiliares (p. ej. la calefacción contra condensaciones).
¡Comprobar la ausencia de tensión!
Si se sobrepasan las **tolerancias** especificadas en **EN 60034, parte 1/IEC 34-1** (tensión ± 5%, frecuencia ± 2%, forma de onda, simetría) aumenta el calentamiento y disminuye la compatibilidad electromagnética. Observar los datos en la placa de características así como el esquema en la caja de conexiones.
Las conexiones se realizarán de forma que quede asegurada una conexión eléctrica **fiable y duradera** (nada de extremos de hilos al aire); usar terminales de cable adecuados. Unir a un conductor de protección.

Pares de apriete de las conexiones en la placa de bornes:

	∅ rosca	M4	M5	M6	M8	M10
	Par de apriete [Nm]	0,8...1,2	1,8...2,5	2,7...4	5,5...8	9...13

Distancias al aire de las partes sometidas a tensión entre elles y con relación a tierra ≥ 5,5 mm ($U_N \leq 690$ V).

En la caja de conexión **no deben haber** cuerpos extraños, suciedad ni humedad. Los pasacables que no se necesiten, así como la caja en sí, deberán sellarse de forma **hermética al polvo y al agua**.
Para marcha sin elementos de transmisión, asegurar la chaveta contra su desprendimiento accidental.
Comprobar el funcionamiento de los frenos antes de la puesta en marcha en los motores provistos de los mismos.

6 Servicio

Son despreciables las vibraciones $v_{ef} \leq 3{,}5$ mm/s ($P_N \leq 15$ kW) ó $v_{ef} \leq 4{,}5$ mm/s ($P_N > 15$ kW) en servicio con acoplamiento.
Si se observan divergencias durante el servicio respecto al servicio normal, p. ej. **temperatura elevada**, **ruidos**, **vibraciones**, deberá desconectarse el motor en caso de duda. Indagar la causa y en caso dado consultar con el fabricante. No dejar fuera de servicio, ni durante la marcha de prueba, los dispositivos de protección.
Limpiar los conductos de aire periódicamente si hay mucha suciedad.
Abrir de tanto en tanto los **orificios de purga del agua de condensado**.

Los motores **sin** dispositivo de reengrase deberán reengrasarse o se reemplazarán los rodamientos de acuerdo con las indicaciones del fabricante, a más tardar después de 3 años.
Los rodamientos **con** dispositivo de reengrase se reengrasarán con el motor en marcha. Observar la placa de reengrase.
En le caso de **motores con refrigeración separada**, el motoventilador debe estar en marcha durante el funcionamiento del motor.

7 Otras informaciones

¡Observar la información sobre dispositivos complementarios! Para más detalles ver nuestras extensas Instrucciones de servicio y mantenimiento (en alemán / inglés / francés / español / italiano / sueco). Con gusto se las enviaremos si nos indica el tipo y el número de su máquina.

¡Guardar estas advertencias de seguridad y de puesta en marcha!

SIEMENS

ITALIANO

CE

Avvertenze per la sicurezza e la messa in servizio di motori asincroni in bassa tensione
(conformemente alla direttiva per impianti impiegati in bassa tensione 73/23/CEE)

1 Generalità

Alcune parti dei motori elettrici sono pericolose in quanto in tensione o in movimento. Altrettanto vale per le superfici, che possono raggiungere temperature elevate. Tutte le operazioni di trasporto, collegamento, messa in servizio e manutenzione devono essere eseguite da **personale addestrato** (cfr. VDE 0105; IEC 364). La non osservanza di tali norme può **provocare gravi lesioni alle persone ed ingenti danni materiali**. Si raccomanda di rispettare i **regolamenti nazionali e locali** e di attenersi alle **istruzioni relative all'impianto**.

2 Uso appropriato

I motori sopraelencati sono destinati ad impianti industriali. Essi sono conformi alle norme armonizzate della serie **EN 60034 (VDE 0530)**. L'impiego in ambienti potenzialmente esplosivi non è consentito salvo dichiarazione contraria nelle istruzioni (cfr. avvertenze supplementari). Qualora il motore debba essere incorporato in impianti non industriali, è assolutamente necessario provvedere a misure di sicurezza supplementari (es. protezioni da contatti per bambini). Tali misure devono essere realizzate al momento dell'installazione.
I motori sono tarati per temperature ambiente tra **- 20°C e + 40°C** e per altitudini non superiori a **1000 m s.l.m.** Si raccomanda di osservare comunque i dati di targa ai quali devono corrispondere **tutte** le condizioni ambientali del luogo di installazione.

I motori a bassa tensione sono **componenti** da integrarsi in macchine ai sensi della direttiva CEE 89/392 relativa alle macchine. La **messa in servizio** non è consentita fin tanto che non è stata accertata la conformità del prodotto finale a detta direttiva (osservare EN 60204-1).

3 Trasporto, immagazzinaggio

Comunicare tempestivamente eventuali **danni** verificatisi durante il trasporto. In tal caso non procedere alla messa in servizio. Serrare i golfari di trasporto. Essi sono dimensionati solo per il peso del motore e non è pertanto consentito aumentare il carico. Ove necessario utilizzare mezzi di trasporto dimensionati per pesi superiori (es. funi). Prima di procedere alla messa in servizio **asportare** tutte le parti utilizzate per assicurare l'impianto durante il trasporto. Tali parti devono essere conservate per eventuali trasporti successivi. Qualora i motori vengano immagazinati, scegliere un luogo asciutto, privo di polveri e vibrazioni. ($v_{eff} \leq 0{,}2$ mm/s) onde evitare danni ai cuscinetti. Un periodo di immagazzinaggio prolungato comporta la diminuzione della durata del grasso.
Prima della messa in funzione misurare la resistenza d'isolamento. Con valori inferiori a 1kΩ per ogni Volt di tensione nominale asciugare gli avvolgimenti.

4 Installazione

Il motore deve essere installato su superficie piana. Accertarsi che i piedini o la flangia siano ben serrati e che, nel caso di giunto diretto, il motore sia perfettamente allineato.Evitare che si creino risonanze pari alla frequenza dei giri del motore o doppie della frequenza di rete. Far ruotare **manualmente** il rotore per verificare l'assenza di rumori di strisciamento. **Verificare il senso di rotazione** con giunto disinnestato (cfr. par. 5).
Calettare (estrarre) gli elementi condotti, es. puleggia per trasmissione a cinghia, giunto ecc., solo mediante dispositivi appositi (calettamento a caldo). Evitare tensioni non consentite sulla puleggia. (catalogo, distinta tecnica).
Il tipo di **equilibramento** è indicato sulla parte frontale dell'albero o sulla targhetta (**H** = mezza chiavetta; **F** = intera chiavetta). Montando gli elementi condotti prestare attenzione all'equilibratura! Nel caso di equilibratura a mezza chiavetta asportare le parti sporgenti visibili della chiavetta.
Nelle varianti costruttive con l'estremità dell'albero rivolta verso il basso si consiglia di applicare un tettuccio di protezione; se l'estremità dell'albero è rivolta verso l'alto applicare una copertura che eviti la penetrazione di corpi estranei nel ventilatore.

Tipo: **1LA, 1LB, 1LC, 1LD, 1LF, 1LG, 1LL, 1LN, 1LP, 1LS, 1LT, 1LV, 1PB, 1PF, 1PK, 1PP, 1PQ, 1PR**

Altezza asse: 56 ... 450 mm

Non ostacolare la ventilazione! L'aria scaricata, compresa quella proveniente da altri gruppi, non deve essere riaspirata subito.

5 Collegamento elettrico

Qualunque operazione sull'impianto deve essere affidata a **personale addestrato.** Il motore deve essere **disattivato e isolato. Assicurarsi che non sia possibile una reinserzione accidentale.** Detti provvedimenti hanno validità anche per quanto riguarda i circuiti ausiliari (es. scaldiglie).

Verificare l'assenza di tensione!

Il superamento dei valori di **tolleranza** indicati in **EN 60034, parte 1 / IEC 34-1** (tensione ±5%, frequenza ±2%, forma e simmetria della curva sinusoidale) comporta un aumento del riscaldamento e influenza la tolleranza elettromagnetica). Osservare i dati di targa e lo schema circuitale contenuto nella scatola collegamenti.
L'allacciamento deve essere effettuato in modo tale da garantire un collegamento elettrico duraturo e sicuro (evitare che vi siano estremità sporgenti di fili). **Effettuare collegamenti di protezione!**

Copie di serraggio per l'allacciamento delle morsettiere

	Filetto	M4	M5	M6	M8	M10
	Coppia di serraggio [Nm]	0,8...1,2	1,8...2,5	2,7...4	5,5...8	9...13

Traferi tra le parti nude in tensione e verso terra ≥ 5,5 mm ($U_N \leq 690$ V).

Nella scatola collegamenti non devono essere presenti nè corpi estranei, nè sporcizia o umidità. Chiudere i bocchettoni passacavi non utilizzati e la scatola stessa **a prova di penetrazione di polvere ed acqua.**
In funzionamento di prova senza elementi condotti **assicurare la chiavetta.**
Nel caso di motori dotati di freno, verificarne il funzionamento prima della messa in servizio.

6 Esercizio

Intensità di vibrazione nell'ordine di $v_{eff} \leq 3{,}5$ mm/s ($P_N \leq 15$ kW) o $v_{eff} \leq 4{,}5$ mm/s ($P_N > 15$ kW) con funzionamento senza giunto sono trascurabili.
Qualora si dovessero verificare anomalie rispetto all'esercizio normale **(aumento della temperatura, rumori, vibrazioni),** si raccomanda di disinserire il motore. Verificare la causa delle anomalie e interpellare eventualmente il costruttore. Non disinserire mai i dispositivi di protezione, nemmeno in funzionamento di prova.
Nel caso di forte sporcizia, pulire regolarmente le condutture di areazione. Aprire periodicamente i **fori per lo scarico della condensa!**

Nel caso di motori **senza dispositivi di ingrassaggio,** attenersi alle istruzioni del costruttore. Il reingrassaggio è da effettuarsi comunque al più tardi dopo 3 anni.
Nel caso di cuscinetti **con ingrassatore,** procedere all'ingrassaggio con motore funzionante. Attenersi alle indicazioni!
L'esercizio di **motori a ventilazione forzata è solo consentito con il ventilatore** esterno acceso.

7 Informazioni supplementari

Osservare le istruzioni relative ad eventuali dispositivi supplementari! Informazioni più dettagliate sono contenute nelle istruzioni per l'esercizio e la manutenzione (tedesco, inglese, francese, spagnolo, italiano, svedese). Tali istruzioni possono essere richieste indicando il tipo e il numero di matricola del motore.

Conservare con cura queste istruzioni!

SIEMENS

CE

SVENSKA

Säkerhets- och idrifttagningsanvisningar för lågspännings-asynkronmotorer

(enl. lågspänningsdirektivet 73/23/EEC)

Type: **1LA, 1LB, 1LC, 1LD, 1LF, 1LG, 1LL, 1LN, 1LP, 1LS, 1LT, 1LV, 1PB, 1PF, 1PK, 1PP, 1PQ, 1PR**

Axelhöjd: 56 ... 450 mm

1 Allmänt

Elmotorer har farliga, spänningsförande och roterande delar samt ev. heta ytor. Allt arbete i samband med transport, anslutning, idrifttagning och regelbundet underhåll måste utföras av **kvalificerade, ansvariga yrkesmän** (VDE 0150; IEC 364). Osakkunnig hantering kan medföra svåra **person-** och **materialskador.** Uppmärksamma gällande **svenska, lokala** och **anläggningsspecifika bestämmelser och krav.**

2 Avsedd användning

Dessa motorer är avsedda för yrkesmässig användning. De uppfyller kraven i de harmoniserade standardena i serien **EN60034 (VDE 0530)**. De får **inte användas i explosionshotade** utrymmen (Ex-områden) om de inte uttryckligen sägs vara avsedda för detta (se kompletterande anvisningar). Om speciellt skärpta krav ställs i något speciellt fall vid icke yrkesmässig användning - t.ex. krav på skydd mot beröring av barn - så skall användaren se till att dessa villkor uppfylls på installationsplatsen.

Motorerna är dimensionerade för omgivningstemperaturer **mellan -20°C och +40°C** och installationshöjder ≤ **1000 möh.** Om märksylten ger annan information, så ta ovillkorligen hänsyn till denna. Förhållandena på installationsplatsen måste i alla avseenden stämma med uppgifterna på märkskylten.

Lågspänningsmotorer är **komponenter** för montering i maskiner enligt maskindirektivet 89/392/EEC. De **får inte tas i drift** förrän överensstämmelse med detta direktiv har dokumenterats (beakta EN 60204-1).

3 Transport, förvaring

Underrätta omedelbart transportföretaget om motorn efter leveransen visar sig ha **skador;** ev. kan dessa **utesluta idrifttagning.** Dra åt de iskruvade transportöglorna ordentligt. De är dimensionerade för motorns vikt och får inte utsättas för ytterligare belastning. Använd lämplig transportutrustning när så behövs (t.ex. lyftselar).

Ta bort transportsäkringarna innan motorn sätts i drift. Sätt tillbaka dem igen om motorn skall flyttas. Motorerna kan förvaras i **torr och dammfri** omgivning **utan större vibrationer** (v_{eff} ≤ 0,2 mm/s) för undvikande av stilleståndskador på lagren. Vid längre förvaringstid reduceras lagerfettets livslängd.

Mät isolationsmotståndet före idrifttagningen. Vid värden ≤ 1KΩ per volt märkspänning skall lindningen torkas.

4 Installation

Montera motorn på ett jämnt underlag med pålitlig fastsättning av foten eller montageflänsen. Rikta upp axeln omsorgsfullt vid direkt påkoppling. Undvik installation som innebär resonans med trefasfrekvensen eller dubbla nätfrekvensen. Vrid rotorn **för hand** och lyssna efter skrapande ljud. Kontrollera **rotationsriktningen** innan motorn kopplas på det drivna systemet (se Avsnitt 5).

Drivdon (remskiva, koppling, etc.) skall dras på och tas av med lämpliga verktyg (uppvärmning) och förses med beröringsskydd. Undvik otillåtna remspänningar (se katalog, tekniska data)

Balanseringsstatus är angivet på axeltappens sidoyta (**H** = halv kil, **F** = hel kil). Ge akt på detta när drivdonet monteras. Vid balansering med halv kil skall den **utskjutande, synliga** delen av kilen slipas bort.

På modeller med axeltappen nedåt rekommenderas ett skyddstak och vid montering med axeltappen uppåt måste man **på installationsplatsen** bygga ett skydd, så att främmande partiklar inte kan falla in i fläkten.

Förhindra inte ventilationen! Frånluft får inte kunna sugas in igen, inte heller från intilliggande aggregat.

5 Elektrisk anslutning

Allt arbete skall utföras av **kvalificerade yrkesmän** med motorn **stillastående, frånkopplad och låst mot oavsiktlig återinkoppling.** Detta gäller även hjälpströmkretsar (t.ex. stilleståndsuppvärmning).

Kontrollera att anslutningen är spänningslös!

Om **toleranserna i EN 60034 del 1 / IEC 34-1** överskrids - dvs. spänning ±5%, frekvens ±2%, symmetrisk karakteristik - så överhettas motorn och vållar starkare elektromagnetiska störningar. Ta hänsyn till märkskyltens uppgifter och kopplingsschemat i uttagslådan.

Motorn måste anslutas så att en **varaktig** pålitlig elektrisk förbindelse erhålls (inga utstickande trådändar). Använd lämplig skoning på kabeländarna. Ordna pålitlig anslutning av **skyddsledare.**

Åtdragningsmoment för anslutning av plintarna

	Gängdiam.	M4	M5	M6	M8	M10
	Åtdragnings-moment [Nm]	0,8...1,2	1,8...2,5	2,7...4	5,5...8	9...13

Luftgap mellan blanka, spänningsförande delar sinsemellan samt mellan dessa delar och jord ≥ 5,5 mm (U_N ≤ 690 V) .

I uttagslådan får det inte förekomma främmande partiklar, smuts eller fukt. De kabelöppningar som ej används skall förseglas **damm- och vattentätt.**

Fixera axelkilen före provkörningen. På motorer med broms måste man kontrollera att bromsen fungerar innan motorn startas.

6 Drift

Vibrationer upp till v_{eff} ≤ 3,5 mm/s (P_N ≤ 15 kW) resp. v_{eff} ≤ 4,5 mm/s (P_N > 15 kW) kan godtas vid direkt påkoppling på axeln.

Stoppa motorn om avvikelser från normal drift iakttas - t.ex. **förhöjd temperatur, buller, vibrationer.** Fastställ orsaken och ta ev. kontakt med tillverkaren. Sätt inte skyddsanordningar ur funktion, inte heller vid provkörningen.

Rengör luftkanalerna regelbundet om miljön är starkt förorenad. Öppna **kondensvattenhålen** då och då!

I motorer **utan anordning för eftersmörjning** skall lager och fett bytas enligt tillverkarens uppgifter, dock senast efter 3 år. Lager **med eftersmörjningsanordning** skall eftersmörjas med motorn gående. Följ anvisningarna på märkskylten!
När en **motor har exern fläkt** måste denna vara inkopplad tillsammans med motorn.

7 Övrig information

Ge akt på information rörande eventuella tillsatser. Övriga uppgifter finns i våra utförliga drifts- och underhållsinstruktioner (TYSKA / ENGELSKA / FRANSKA / SPANSKA / ITALIENSKA / SVENSKA). De kan erhållas på begäran. Ange motortypen och maskinnumret.

Förvara dessa säkerhets- och driftsanvisningar för framtida bruk!

These operating instructions are binding for double change-over filters according to FLENDER works standard W 5921.

Function

Double change-over filters are designed for continuous filtration. Normally, only one filter chamber is in operation, the second filter chamber being held in reserve. As soon as the filter is clogged by increasing contamination (see indicator contamination), changeover takes place to the second filter chamber. Change-over of the liquid flow from one chamber to the other takes place without interrupting the actual liquid flow.

Startup

Before startup, the entire system should be flushed through. This ensures that possible contamination occuring during installation will not cause any malfunctions. Normally, the filter will be operated in single chamber mode. In case of extremely high viscosity (cold start at low oil temperatures and/or high initial impurity content), parallel operation of both filter chambers is advisable (switch-over lever in centre position). After completion of the startup phase, change over to single chamber mode. The shut-off filter element intended as backup in subsequent single chamber mode **must** be cleaned immediately after change-over to permit utilizing the full impurity collection capacity.

Cleaning

Increasing contamination of the filter is apparent from the contamination indicator. The filter element held in reserve should be filled (by slowly turning the switch-over lever, while at the same time opening the venting screw until oil emerges). The pressure of the shut-off filter element should be released by opening the venting screw and drained by unscrewing the drain plug. Afterwards, the filter chamber should be unscrewed and the filter element withdrawn. The filter element should be washed with fresh cleaning liquid, such as benzine or warmed diesel oil, and then blown through from the inside to the outside.

Diese technische Unterlage hat gesetzlichen Schutz (DIN 34)

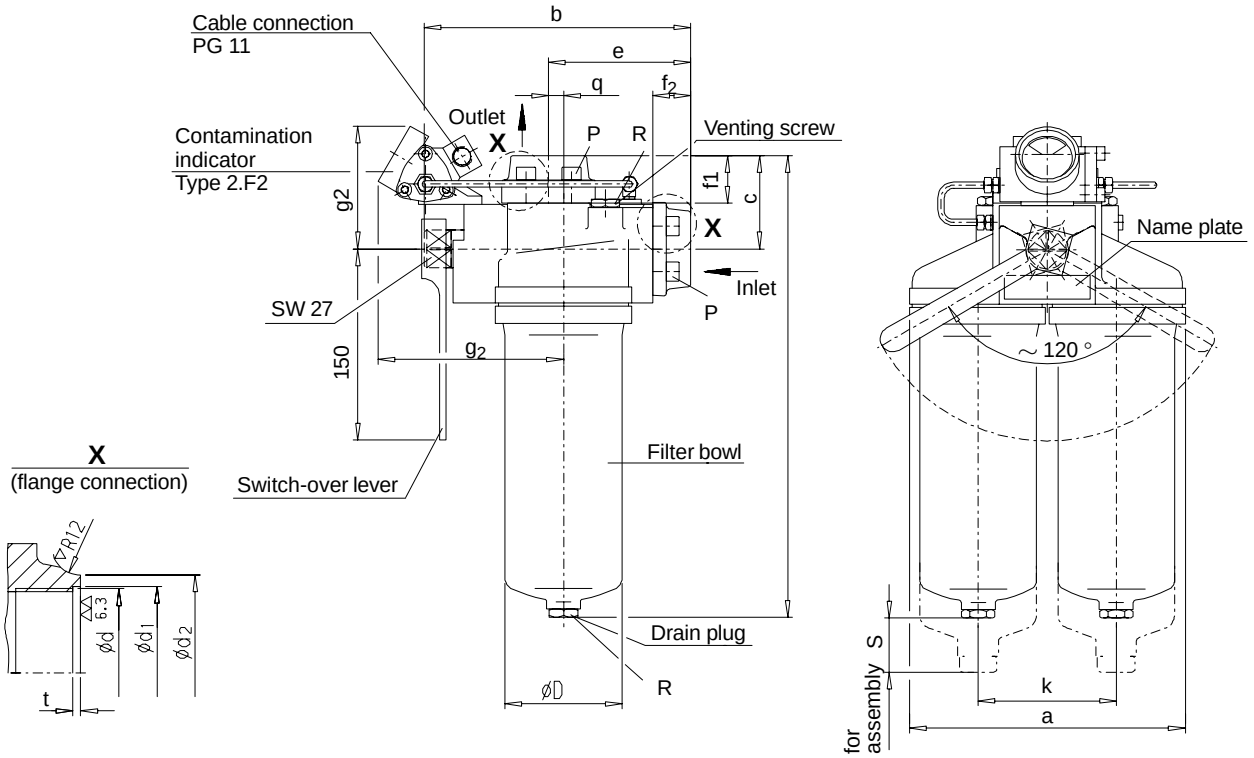

Nom. diam.	d	f_1	f_2	d_1	d_2	t
32	G 1 1/4	41	32	42.2	47.0	2.0
50	G2	45	36	61.0	74.0	3.0
80	-	50	41	81.0	89.0	-

Table 1: Flange connection dimensions

Nom. diam.	Flow rate V	Mesh area per filter element	Filter length	a	b	c	e	h	k	D	R	S	P	q	g_1	g_2	Weight	Mesh width 1)
	l/min	cm^2										~			~	~	kg	µm
32	150	1500	187	216	215	72	115	324	105	86	G 3/8	40	M 10	10	150	110	13	60 or 25
50	350	3500	267	260	247	88	134	435	130	110	G 1/2	40	M 12	9	160	130	20	60 or 25
80	900	9000	358	352	316	103	183	568	180	158	G 3/4	70	M 16	12	185	160	31	60 or 25

Table 2: Filter dimensions

1) The ”nominal” mesh width is determined by the smallest particle size of which 90 % is retained in the filter mesh.

Diese technische Unterlage hat gesetzlichen Schutz (DIN 34)

Technical Data

Operating pressure	:	max. 16 bar
Operating temperature	:	max. 120 °C
Oil flow velocity	:	max. 3 m/s
Contamination indicator	:	Type 2.F2 (differential pressure Δp 2 bar)

1 two-way contact

Electrical limit data (max. contact loading)

Switching voltage u $\leq$ 250 V DC + AC

Switching current I $\leq$ 1 A

Switching capacity P $\leq$ 30 W or $\leq$ 60 VA

Type of protection IP 65

Materials

Housing and switch-over element	:	GG-25		
Filter bowl	:	GK-AL		
Filter (cage mesh)	:	CrNi/Al		
Diaphragm	:	Perbunan		
O-rings	:	Perbunan		
O-ring dimensions	:	on filter chamber for DN	32:	85.09 x 5.33
			50:	104.14 x 5.33
			80:	148.59 x 5.33
		on inlet flange for DN	32:	37.47 x 5.33
			50:	59.69 x 5.33
			80:	85.09 x 5.33
		on outlet flange for DN	32:	40.87 x 3.53
			50:	63.09 x 3.53
			80:	91.67 x 3.53

Circuit diagram for contamination indicator

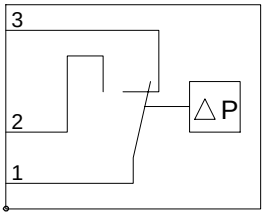

Diese technische Unterlage hat gesetzlichen Schutz (DIN 34)

Serck

MAINTENANCE MANUAL AM11/AM13 OIL COOLERS

1 TECHNICAL DATA

1.1 Nameplate

A nameplate is attached to the shell which specifies maximum operating conditions, part number and date of manufacture.

1.2 Thermal design data

The thermal performance differs for every heat exchanger. If required, the thermal performance of a particular heat exchanger can be supplied in the form of a data sheet.

1.3 Connections

Refer to drawing. (Appendix 1)

1.4 Construction

Refer to drawing. (Appendix 1)

2 CONSTRUCTION AND OPERATION

The cooler consists of a tubestack housed within an aluminium shell. The tubestack is made up of 8mm O.D tubes, with segmental baffles and fins. The tubes are bonded at each end into brass tubeplates.

The tubestack is assembled within the shell and sealed by '0' rings located within grooves in the tubeplates. Cast water boxes are bolted to the shell and sealed by '0' rings also located in grooves within the tubeplate.

The interspace between the '0' rings located in the shell and waterbox is bled to atmosphere which avoids any intermixing of the two fluids.

To ensure correct assembly of the tubestack within the shell, a location mark is incorporated in the tubeplate (see assembly drawing).

The waterboxes are designed to minimise turbulence and are fitted with plugs at each end to facilitate venting and draining. The water pipe connections are tapped B.S.P.

The shell is machined to house the tubestack and waterboxes. B.S.P. tapped connections are located at either end of the shell to provide the oil inlet and outlet.

Serck

Oil is guided over the fins and tubes by segmental baffles, the water flows through the tubes in counterflow to the oil flow.

3 SAFETY INSTRUCTIONS

- The permissible operating temperature and operating pressures specified on the nameplate may not be exceeded.
- No bolts on the heat exchanger may be loosened whilst the unit is under pressure.
- For some applications and in the case of malfunctions, the housing can heat up to such an extent that a risk of burns exists.

To avoid danger: Insulate the housing with thermal insulation and wear protective clothing.

4 TRANSPORT AND STORAGE

4.1 Transport

- Avoid damage to the cast shell, as difficulties may arise when withdrawing the tubestack.
- When handling the unpacked heat exchanger, proceed as follows: attach slings around the shell or where applicable, to the lifting points provided for the purpose.

4.2 Storage

Our heat exchangers are inhibited to give a shelf life of at least 12 months, provided they are stored under dry conditions.

5 INSTALLATION

The following points must be observed:

- Installation must be performed by specialist personnel.
- The foundation must be designed to take the weight of the heat exchanger.
- The supply pipelines must be laid in an isolated condition.
- Any cleaning openings or drain and ventilation connections must remain accessible.

Serck

6 COMMISSIONING

- Heat exchangers must remain unpressured for installation, both on the tube side and the shell side.

  The volume rates of flow of the two media must be adjusted to the values given in the thermal design data to ensure the correct operating conditions.

- When starting the heat exchanger with a viscous fluid, high pressure can develop temporarily. Therefore, in some cases it is advisable to provide a bypass regulator for cold starts.

7 MAINTENANCE AND CLEANING

Dismantling

1 Unbolt the water boxes from the cylinder and carefully remove the '0' rings exposed at each end of the tubestack.

2 Note the position of the tubestack location mark on the tubeplate.

3 Push the tubestack a little way out of the cylinder to expose one '0' ring. Remove the '0' ring.

4 Push the tubestack in the other direction to expose the other '0' ring. Slide the tubestack out of the cylinder.

Cleaning

The cooler should be removed and cleaned at overhaul periods, as a normal practice. If, however, due to faulty filtration for instance, there is a reduction of oil circulation, remove and examine the cooler to ensure that it is not fouled on the oil side.

Oil side: Usually, immersion in a paraffin (solvent, detergent or alkaline) degreasing tank is sufficient to remove all traces of dirty oil from the shell and tubestack.

When stubborn carbon deposits are difficult to remove in this manner, the tubestack should be immersed in a bath of detergent, preferably heated (except in the case of vapour solvents) and moved vigorously to and fro to achieve a sluicing action.

On no account use stiff metal brushes or probes which may damage the tubes and flow guide plates.

NOTE: DO NOT USE ALKALINE CLEANING SOLUTIONS FOR THE ALUMINIUM SHELL

Serck

Water side: If hard or impure water is used, the cooler may become blocked by hard scale or foreign matter.

A badly scaled cooler can be restored to its original cleanliness by immersing the tubestack in a suitable inhibited acid solution, the stack having first been thoroughly cleansed on the oil side.

For removal of hard scale suitable solvents should be obtained from a reputable metal cleaning specialist and used according to their instructions.

ASSEMBLY

NOTE: **Make certain that all components are clean before commencing assembly. Particular attention should be paid to the cylinder bore and to the '0' ring grooves.**

1 We advise the use of new joints when the cooler is re-assembled.

2 Insert tubestack into the cylinder without the '0' rings fitted. Continue insertion until the second '0' ring groove is fully exposed at the opposite end.

3 The tubestack location mark should line up with the oil port on the cylinder.

4 Fit greased '0' ring into exposed groove .

5 Push the tubestack back into the cylinder to just expose this second groove at the other end.

6 Fit greased '0' ring into groove and push tubestack back into cylinder.

NOTE: **On no account should the '0' ring pass the oil ports.**

7 Fit remaining '0' rings, followed by waterboxes, replace nuts and bolts.

Test the cooler on either the oil side or the water side using air at 4 bar, with the cooler immersed in water.

Serck

8 FAULT RECTIFICATION

SYMPTOM	POSSIBLE CAUSE	REMEDY
Required cooling performance is not achieved.	The actual flow volume on the tube side/cylinder side does not correspond with the design date.	Increase flow volume on the tube side/shell side.
	The actual temperatures are higher/lower than assumed in the design.	Consult our technical office.
	Media used are different to those assumed in the design.	Consult our technical office.
	The tube bundle is contaminated on the cylinder side/tube side.	Clean the tubestack on the shell side/tube side.
The two media mix.	A cooler/heater tube is leaking.	Seal both ends of the leaking tube with stoppers. Have the tubestack repaired.
	A tube-to-tube plate joint is leaking.	Replace the tubestack.

9 REPLACEMENT PARTS

For part designations, refer to sectional drawing.

When making enquiries about replacement parts, always specify the Serck part number.

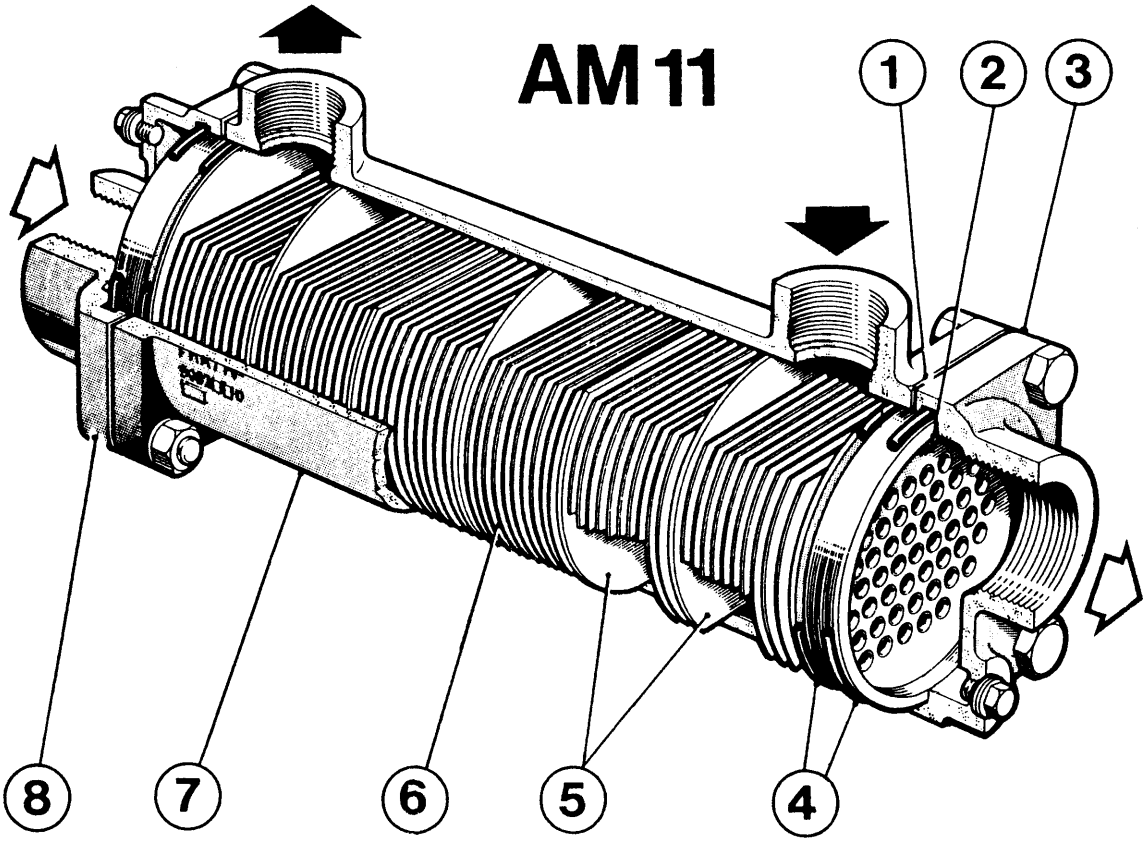

1. **Leakage Gap**
   Mise à l'atmosphère
   Leckagespalt

2. **Stack Location Indicator**
   Indicateur de position du faisceau
   Rohrbündelfixierungsmarke

3. **Water Box**
   Boite à eau
   Wasserkammer

4. **'O' Ring Joints**
   Joints toriques
   O – Ringdichtungen

5. **Baffles**
   Chicanes
   Umlenkbleche

6. **Fins**
   Ailettes
   Lamellen

7. **Cylinder**
   Cylindre
   Zylinder

8. **Water Box**
   Boite à eau
   Wasserkammer

Water Eau Wasser — Oil Huile Öl

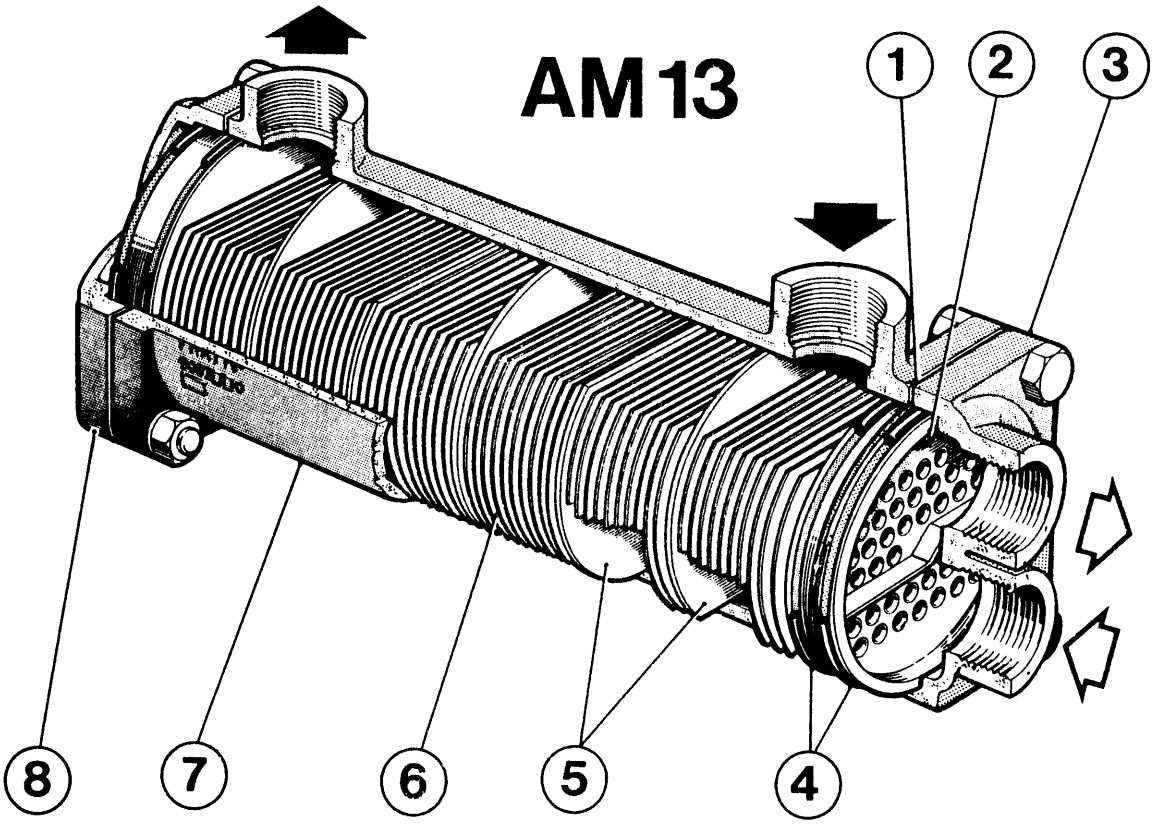

Dimensions in mm

These operating instructions are binding for non-return valves according to Flender works standard W 5916.

Installation

The non-return valves should be installed in such a way, that the flow direction corresponds to the arrow on the housing. Only a correct installation prevents an oil return. The non-return valves concerned are maintenance-free and can be used for mineral oil, synthetic oil and for water. Alternatively, a horizontal or a vertical installation is possible. The non-return valves are factory set.

The customer is **not** allowed to carry out an additional opening pressure setting.

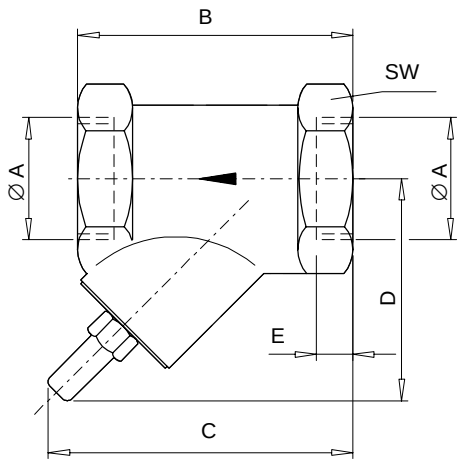

Nominal pressure PN (bar)	**Tube connection** A	B	C	D	E	SW	**Weight** (kg)
16	G 1/2	65	72	45	15.0	27	0.23
	G 1	90	113	76	19.1	41	0.61
	G 1 1/2	120	135	88	21.4	55	1.18
	G 2	150	168	114	25.7	70	2.18

Material: Housing: MS-chromium-plated (dull)
Seal: Viton

max. permissible temperature: 130 °C

Diese technische Unterlage hat gesetzlichen Schutz (DIN 34)

Dimensions in mm

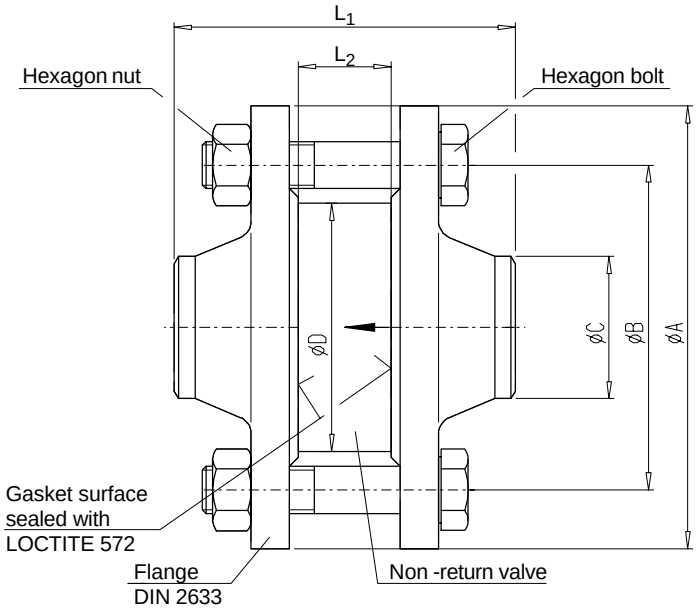

Nominal pressure PN (bar)	Nominal width DN	Hexagon bolt	Number	Attachment dimensions						Weight compl. (kg)
				A	B	C	D	L_1	L_2	
16	40	M16 x 90	4	150	110	48.3	84	115.5	31.5	4.9
	50	M16 x 100	4	165	125	60.3	97	130.0	40.0	6.7
	65	M16 x 110	4	185	145	76.1	117	136.0	46.0	8.2
	80	M16 x 120	8	200	160	88.9	132	150.0	50.0	10.6
	100	M16 x 130	8	220	180	114.3	152	164.0	60.0	13.6
	125	M16 x 160	8	250	210	139.7	184	200.0	90.0	21.7
	150	M20 x 180	8	285	240	168.3	209	216.0	106.0	28.2
	200	M20 x 220	12	340	295	219.1	264	264.0	140.0	50.6

Material: Housing: for DN 40 - 100 : G - CuSN 10
for DN 125 - 200 : GG - 25
Seal: : Viton

max. permissible temperature range: - 25 up to + 200 °C

Diese technische Unterlage hat gesetzlichen Schutz (DIN 34)

Pressure gauges to Flender Works Standard W 5914 are precision instruments for monitoring pressures visually.

General

A tube spring is fastened to a spring holder (screw-on tube). The medium to be measured enters the interior of the spring through the hole in the tube. When the pressure changes, the free end of the spring moves. This movement is transmitted through the pointer mechanism to the pointer and is shown on the dial plate as a pressure value.

The pressure gauges are used solely for visual monitoring.

Technical data

		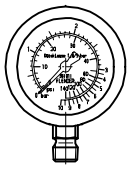	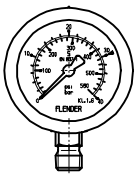	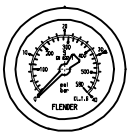	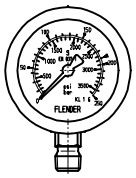	
Indicating range	Scale	Double scale				
	Outside (black)	0 ... 10 bar	0 ... 40 bar	0 ... 40 bar	0 ... 250 bar	0 ... 400 bar
	Inside (red)	0 ... 140 psi	0 ... 580 psi	0 ... 580 psi	0 ... 3625 psi	0 ... 5800 psi
Connection		bottom	bottom	centre rear	bottom	centre rear
Damping fluid		GL98				
Permiss. ambient temperature		-34 ... +100 °C				
Permiss. medium temperature		+100 °C				
Dial graduation		≤ 3 bar 0.1 linear > 3 bar 0.5 Class 1.6 ... 3 bar Class 4 from 3 ... 10 bar	≤ 40 bar 2.0 linear Class 1.6...40 bar	≤ 40 bar 2.0 linear Class 1.6...40 bar	≤ 250 bar 10 linear Class 1.6...40 bar	≤ 400 bar 20 linear Class 1.6...40 bar
Range of application		Dead load: 3/4 x full-scale value Alternating load: 2/3 x full-scale value short-time: full-scale value				
Inspection glass		Polycarbonate (PC)				
Threaded connection		R 1/4	G 1/4			
Type of protection		IP 65				
Material		Stainless steel				
Weight		0.21 kg				

Diese technische Unterlage hat gesetzlichen Schutz (DIN 34)

Bimetallic dial thermometers according to FLENDER works standard W 5924 are precision instruments for visual temperature monitoring of liquid and gaseous media.

Dimension drawing

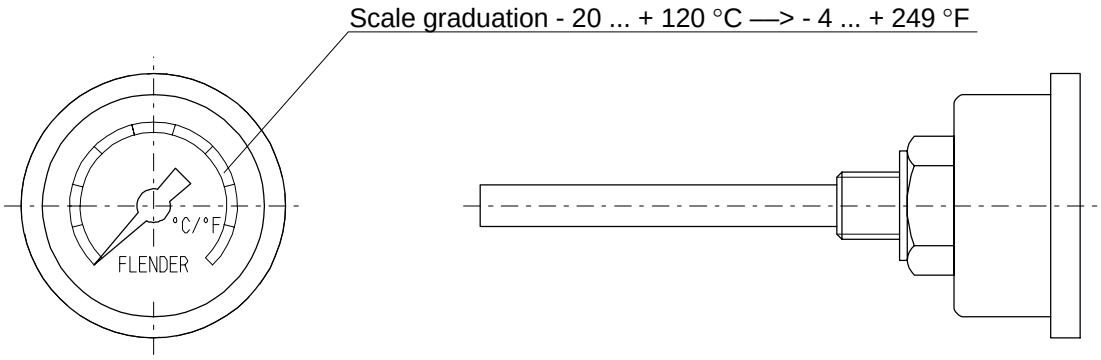

Design

Material:	Compl. stainless steel (CrNiSt)
Indicating range:	- 20 ... + 120 °C
Dial face:	Double scale, outer -20 ... +120 °C black inner -4 ... +249 °F red
Damping liquid:	bis(2-ethylhexyl)-adipate for synthesis (GC>98%)
Max. admissible ambient temperature:	- 35 °C
Inspection glass:	acrylic glass (PMMA)
Precision of indication:	Class 1.5 acc. to DIN 16 203
Scale graduation:	°C = 2° °F = 5°

Installation

When installing the thermometer take care that the immersion tube is dipped into the medium to be monitored.

Diese technische Unterlage hat gesetzlichen Schutz (DIN 34)

These Operating Instructions are binding for volume flow meters to Flender Works Standard W 5927.

General

The volume flow meter described here works in accordance with the orifice plate measuring system, using the Witte orifice plate, by which measurements from Reynold's number Re_{min} = 50 to $Re_{max.}$ 2320 can be carried out virtually independently of viscosity. Measurement requires an even flow of 8 x pipe inner diameter upstream and 5 x pipe inner diameter downstream of the orifice plate (undisturbed straight length of pipe). The meter can be mounted in any position. Calibration for vertical mounting is done at the works.

The volume flow meter is available in two versions:

Variant A: With indicator scale and two contacts (changeover contacts).

Variant B: Without indicator scale and with analog output signal.
This analog signal is in linear proportion to the differential pressure and in quadratic proportion to the volume flow.

Operation and construction

In the position of equilibrium the spring forces on both sides of the diaphragm are in balance. The differential pressure to be measured causes a force to be exerted on one side of the diaphragm. This force shifts the diaphragm system against the measuring range spring until it is in balance with the spring forces. If overload occurs, the diaphragm is supported against metal contact surfaces.
In the case of variant A a centrally located tappet transmits the movement of the diaphragm system to the dial train and the actuating elements of the micro-switches.
In the case of variant B a pressure transducer converts the differential pressure into a 4 - 20 mA signal. This analog signal is in linear proportion to the differential pressure and in quadratic proportion to the volume flow.

Section

1. Pressure chamber
2. Dial train (variant A only)
3. Tappet (variant A only)
4. Micro-switch actuating elements (variant A only)
5. Measuring springs
6. Measuring diaphragm

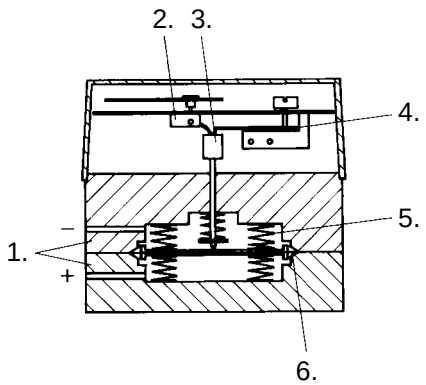

Diese technische Unterlage hat gesetzlichen Schutz (DIN 34)

Variant A: With indicator scale and two contacts (changeover contacts)

Technical data

Operating pressure:	max. 16 bar
Operating temperature:	- 10 ... + 90 °C (operating temperature)
permiss. ambient temperature:	- 40 °C (storage temperature)
Measurement accuracy:	~ ± 2.5 % of the full-scale reading
Scaling:	0 ... 100 %
Switching hysteresis:	~ 2,5 %
max. switching capacity:	5 A / 250 V AC / 500 VA (a.c. voltage) 0.4 A / 30 V DC / 25 W (d.c. voltage)
Type of protection:	IP 65
Output:	2 changeover contacts (separately adjustable)

Connection diagram

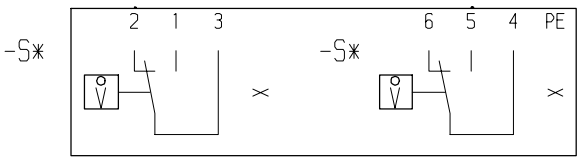

Material

Membranes:	Viton
Measuring-device base:	GGG-40
Shield:	St
Pressure chamber:	Aluminium anodized (black)
Cover:	plastic, very strong

Example: With a max. pump output of 112 l/min a volume flow meter with a volume flow range of up to 155 l/min can be used.

155 l/min % ⇒ 100 %
112 l/min % ⇒ 72 %

Design: A volume flow meter must be selected to the maximum value of the volume flow range of which the max. pump output comes as near as possible.

Diese technische Unterlage hat gesetzlichen Schutz (DIN 34)

Determining the volume flow (throughput)

e.g. volume flow range of up to 280 l/min (see sign on unit)

Pointer deflection 80 % => $\frac{280 \text{ l/min x Pointer deflection \%}}{100 \text{ \%}} = \frac{280 \text{ l/min x } 80}{100} = 224 \text{ l/min}$

Volume flow meter top section

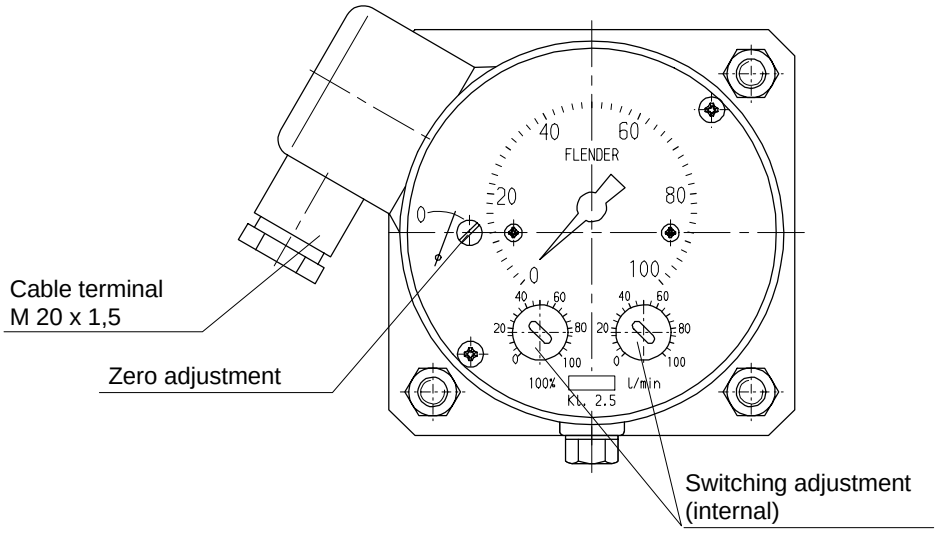

In the case of use in an explosion hazard area the flow monitor can be made intrinsically safe by means of a break relay (see example).

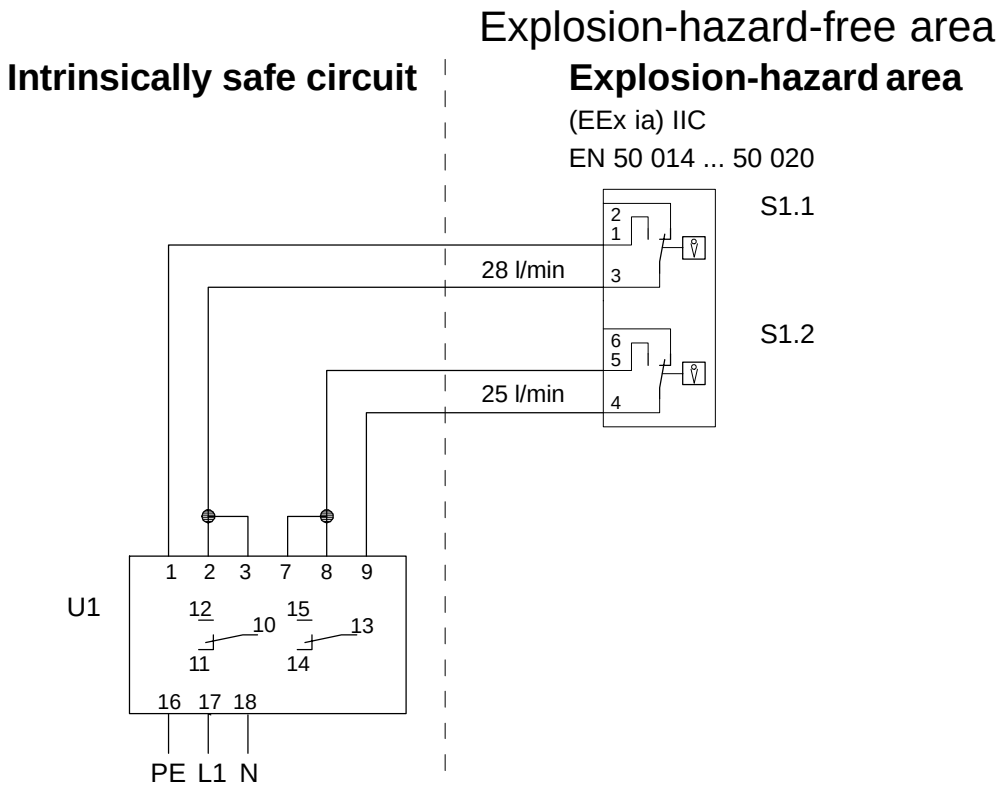

Variant B: Without indicator scale and with analog output signal (not suitable for explosion-hazard-area)

Technical data

Operating pressure:	max. 25 bar
Operating temperature:	- 10 ... + 70 °C (operating temperature)
permiss. ambient temperature:	- 30 °C (storage temperature)
Linearity:	< 2 % of full-scale reading
Signal scaling:	0 ... 100 %
Switching hysteresis:	< 1 % of full-scale reading
Signal type:	analog 4 - 20 mA (not linear); 24 V DC
Type of protection:	IP 54

Connection diagram (two-wire connection)

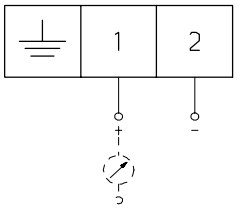

Material

Membranes:	Viton
Measuring-device base:	GGG-40
Shield:	St
Pressure chamber:	Aluminium anodized (black)
Cover:	plastic, very strong

Diese technische Unterlage hat gesetzlichen Schutz (DIN 34)

Example: The 4 - 20 mA signal scaling ranges from 0 to 100 %. With a max. pump output of 112 l/min a volume flow meter with a volume flow range of up to 155 l/min can be used.

155 l/min	=>	100 %	=>	20 mA
112 l/min	=>	72,3%	=>	12,35 mA
100,8 l/min	=>	65 %	=>	10,76 mA
77,5 l/min	=>	50 %	=>	8 mA
0 l/min	=>	0 %	=>	4 mA

Design: This means that, when the pump is at full output, the output signal is 12.35 mA. If this pump is running at only 90 % of its max. output (=100.8 l/min), the output signal is 10.76 mA.

Output signal: Output signal = 4 mA + 16 mA x $(Q_{ist} / Q_{100\%})^2$

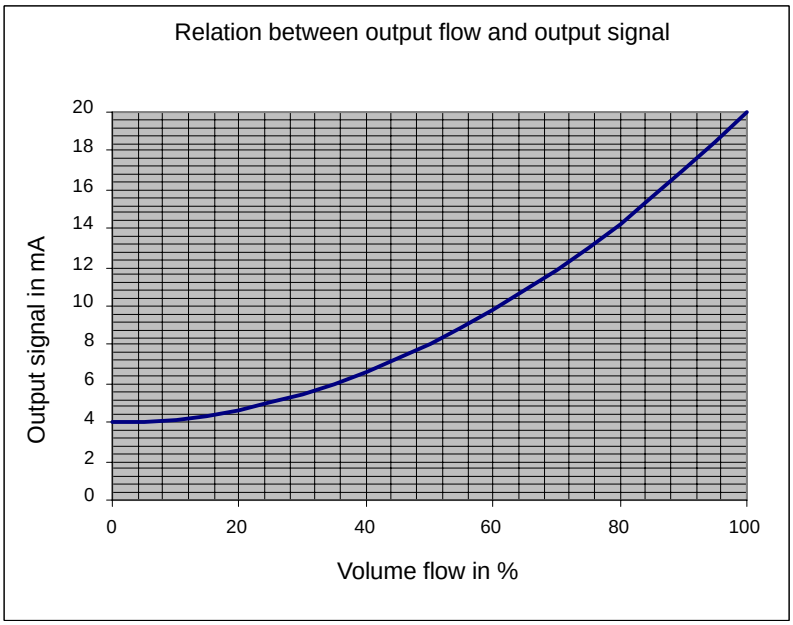

Volume flow meter top section

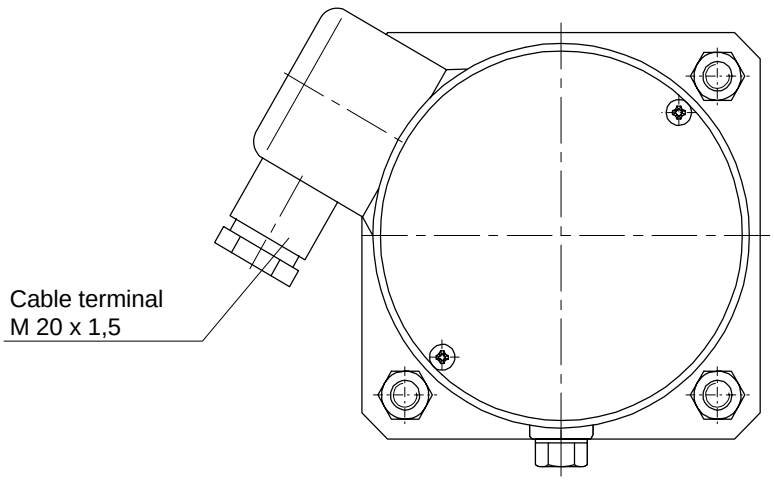

Diese technische Unterlage hat gesetzlichen Schutz (DIN 34)

INSTRUCTIONS

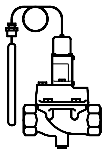

WVTS

016R9557

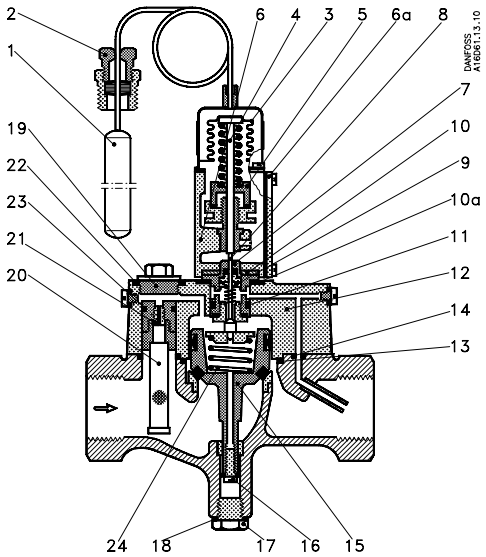

Fig. 1. WVTS 40

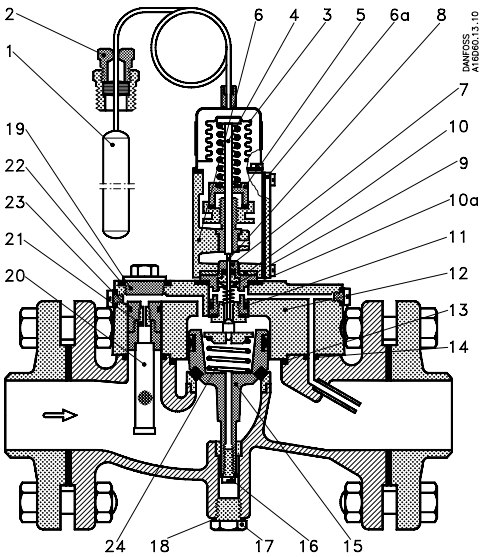

Fig. 2. WVTS 50-100

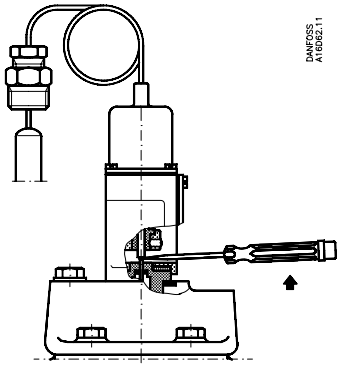

Fig. 4

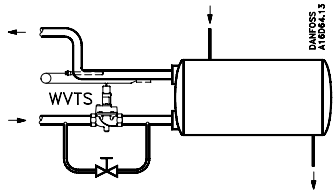

Fig. 3

Type	Fjeder/Spring/Feder/Ressort 1 - 10 bar (100 - 1000 kPa)
WVTS 32	**016D1327**
WVTS 40	**016D0575**
WVTS 50	**016D0576**
WVTS 65	**016D0577**
WVTS 80	**016D0578**
WVTS 100	**016D0579**

Fig. 5

DANSK

Termostatiske vandventiler

Tekniske data

1. Føler
2. Pakdåse
3. Bælgelement
4. Trykstang
5. Reguleringsmøtrik
6. Indstillingshus

6a. Dæksel

7. Pilotindsats
8. Pilotkegle
9. Teflonmanchetter
10. Isolationsskive

10a. Pakning for pilotindsats

11. O-ring for pilotindsats
12. Dæksel
13. O-ring for dæksel *
14. O-ring for pilotkanal
15. Servostempel *
16. Bundskrue for servostempel
17. Bundprop
18. Pakning for bundprop
19. Komplet filterindsats *
20. Selvrensende filter
21. Pilotdyse
22. Pakning
23. O-ring
24. Servofjeder **

* Angiv ventilstørrelsen.
** Se tabellen fig. 5.

Maks. prøvningstryk
16 ato (P_e = 16 bar = 1600 kPa).

Åbningsdifferenstryk
WVTS 32-40: min. 0.5 at (0.5 bar = 50 kPa); maks. 4 at (4 bar = 400 kPa).
WVTS 50-100: min. 0.3 at (0.3 bar = 30 kPa); maks. 4 at (4 bar = 400 kPa).
Hvis WVTS ønskes med et differenstryk på 1 - 10 at (1 - 10 bar, 100 - 1000 kPa), udskiftes servofjederen (24). Se bestillingstabellen, fig. 5.

Tilladelig medietemperatur
For vand: maks. +90°C
For brine: min. –25°C.

Maks. følertemperatur
57°C for området –15°C til +10°C og 0°C til + 30°C.
* 90°C for området +25°C til +65°C.

Montering

WVTS monteres i kølevandstilgangen med gennemstrømning i pilens retning og med bælgelementet opad. Det anbefales at montere et smudsfilter foran ventilen.
Føleren anbringes, hvor den ønskede vandtemperatur skal overholdes.
Føleren kan uden indvirkning på reguleringsevnen anbringes varmere eller koldere end ventilhuset.
For ventiler med området –15°C til +10°C kan føleren monteres i vilkårlig stilling.
For ventiler med de øvrige områder skal føleren monteres vandret eller med følerens frie ende lavest.
Bogstaverne UP og den røde streg på føleren skal vende opad ved vandret eller skrå montering.
På kondensatorer (fig. 3) kan føleren enten fastgøres til afgangsrøret med spændebånd, monteres i en følerlomme i afgangsrøret eller anbringes i direkte kontakt med kølevandet.
Ved anlæggets start skal føleren straks kunne påvirkes af det strømmende kølevands temperaturvariationer. Derfor kan et omløb med en afspærringsventil være nødvendigt for at sikre en kølevandsstrøm under opstart.
Monteres føleren i direkte kontakt med kølevandet, fastgøres den, så pulsationer ikke kan påvirke føleren og derved ødelægge kapillarrøret.
Anvendes følerlomme, opnås en god varmeovergang, når lommen fyldes med kobberpasta.
På luftkompressorer og lignende monteres føleren i den vandfyldte kølekappe. Et omløb er ikke nødvendigt her. Opvarmningen af vandet ved kompressorens start giver altid tilstrækkelig impuls til føleren.

Indstilling

Anbring et termometer på det sted, hvor føleren er placeret.
Fjern dækslet (6a). Med reguleringsmøtrikken (5) reguleres mediets gennemstrømning, indtil termometeret viser den ønskede temperatur på afgangssiden.

© Danfoss A/S

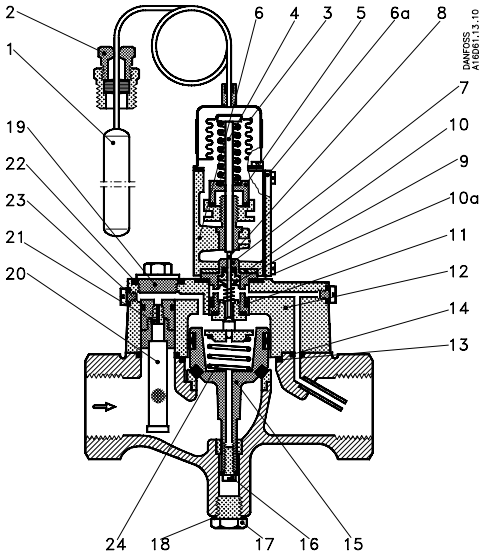

Fig. 1. WVTS 40

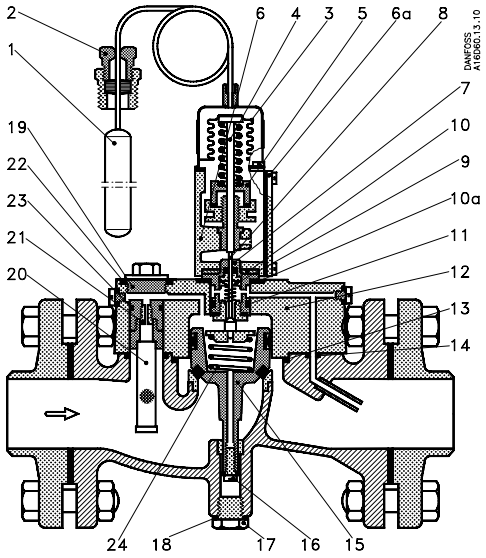

Fig. 2. WVTS 50-100

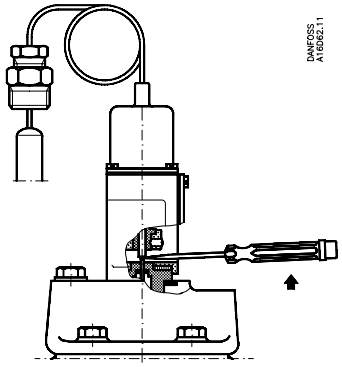

Fig. 4

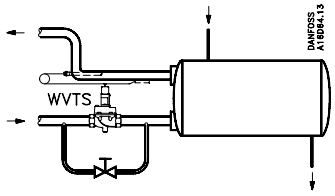

Fig. 3

Type	Fjeder/Spring/Feder/Ressort 1 - 10 bar (100 - 1000 kPa)
WVTS 32	**016D1327**
WVTS 40	**016D0575**
WVTS 50	**016D0576**
WVTS 65	**016D0577**
WVTS 80	**016D0578**
WVTS 100	**016D0579**

Fig. 5

Lavere temperatur opnås ved at dreje reguleringsmøtrikken (5) mod venstre (reguleringsfjederen slækkes) – og omvendt.
Når køleanlægget stopper, falder temperaturen ved føleren, og WVTS vil derfor lukke.

Service
Vandventilen skal lukke tæt for kølevandet, når køleanlægget er stoppet. Hvis den ikke gør det, kan årsagen muligvis være, at større snavspartikler har sat sig fast på servostemplets eller pilotkeglens ventilsæde. Måske er filteret (20) eller pilotdysen (21) tilstoppet.
Snavspartikler kan man forsøge at fjerne som vist på fig. 4. Stik en skruetrækker ind mellem pilotkeglens spindel (8) og trykstangen (4). Når skruetrækkeren vippes, presses pilotkeglen nedad, og ventilen åbner for fuld kølevandsgennemstrømning gennem ventilen.
Hvis vandventilen stadig ikke lukker tæt luk da for kølevandet til vandventilen. Skru filterindsatsen (19) af, og rens både filteret og pilotdysen.
Er filteret eller pilotdysen ikke tilstoppet afmontér topstykket (6) og ventildækslet (12). Topstykket og ventildækslet kan afmonteres, uden at det er nødvendigt at tage trykket af anlægget. Tag pilotindsatsen ud af ventildækslet, rens den og smør den ind i vandfast syrefrit fedtstof. Fyld rummet over teflonmanchetterne (9) med samme fedtstof. Måske er det nødvendigt at indslibe pilotkeglen i pilotsædet.
Rens servostemplet og ventilsædet og smør servocylinderen og servostemplets styr med vandfast, syrefrit fedtstof.
Pilotkanalerne i ventildækslet kan renses efter at skruerne i ventildækslets sider er fjernet.
Undersøg om O-ringene trænger til at skiftes ud.
Efter monteringen eller efter et eftersyn skal vandventilen skylles kraftigt igennem i nogle minutter for at fjerne evt. snavs fra rørledninger m.v. Se fig. 4.
Er der fare for frostsprængning af ventilen i stilstandsperioder, bør den tømmes for vand. Det gøres ved at fjerne bundproppen (17) og skruen (16).

ENGLISH

Thermostatic Water Valves
Technical data
1. Bulb
2. Stuffing box
3. Bellows element
4. Push rod
5. Regulating nut
6. Top part
6a. Cover
7. Pilot insert
8. Pilot cone
9. Teflon sleeves
10. Insulating disc
10a. Pilot insert seal
11. Pilot insert O-ring
12. Cover
13. O-ring for cover
14. O-ring for pilot channel
15. Servo piston *
16. Servo piston button screw
17. Drain plug
18. Drain plug gasket
19. Strainer assembly, complete *
20. Self-cleaning strainer
21. Pilot nozzle
22. Gasket
23. O-ring
24. Servo spring **

* Please state valve size.
** See table Fig. 5.

Max. test pressure

16 atm.g (p_e = 16 bar = 1600 kPa).

Opening differential pressure
WVTS 32-40: Min. 0.5 atm. (0.5 bar = 50 kPa)
Max. 4 atm. (4 bar = 400 kPa).
WVTS 50-100: Min. 0.3 atm. (0.3 bar = 30 kPa)
Max. 4 atm. (4 bar = 400 kPa).

If WVTS is required with a differential pressure of 1 - 10 atm. (1 - 10 bar; 100 - 1000 kPa), the servo spring (24) is to be replaced. See ordering table, Fig. 5.

Permissible temperature of medium
For water: Max. +90°C
For brine: Min. –25°C

Max. bulb temperature
57°C for the ranges of –15°C to +10°C and 0°C to +30°C.
90°C for the range of +25°C to +65°C.

Fitting
WVTS is to be fitted in the cooling water inlet with flow in the direction of the arrow and with the bellows element facing upwards.
It is recommended that a strainer should be inserted before the valve.
The bulb is to be fitted where it is required to maintain or control the water temperature.
The bulb can be fitted warmer or colder than the valve body, with no effect on the regulating capacity.
For valves in the range from –15°C to +10°C the bulb can be fitted in any position.
For valves with other ranges the bulb must be fitted horizontally or with the blank end of the bulb at the lowest level.
The capitals UP and the red line on the bulb must face upwards at horizontal or inclined fitting.
On condensers (Fig. 3) the bulb can either be fixed to the discharge pipe by means of a clip, be inserted in a pocket or placed in direct contact with the cooling water.
When the plant is started, the bulb must be affected at once by the temperature variations of the cooling water flow. A bypass with a shut-off valve can, therefore, be necessary in order to ensure a cooling water flow during start-up.
If the bulb is fitted in direct contact with the cooling water, it must be fixed so that pulsations cannot affect the bulb and thus destroy the capillary tube. If a bulb pocket is used, good heat transmission is obtained by filling the pocket with heat-conductive compound.
On air compressors and similar equipment the bulb is fitted in the water-filled cooling jacket. No bypass is required. The heating of the water at the start of the compressor always ensures a suitable impulse to the bulb.

Setting
Place a thermometer at the point where the bulb is fitted.
Remove the cover (6a). Turn the regulating nut (5) to adjust the medium flow until the thermometer shows the required temperature on the discharge side. A lower temperature can be obtained by turning the regulating nut (5) anti-clockwise (to slacken the regulating spring) – and vice versa. When the refrigeration system stops, the temperature drops at the bulb, and so WVTS closes.

Service
The water valve must close tightly when the refrigeration system is stopped. If not, it may be due to the fact that large impurities have settled on the valve seat of the servo piston of pilot cone. The strainer (20) or the pilot nozzle (21) may be clogged up.
Impurities can be removed as shown in Fig. 4.
Insert a screwdriver between the pilot cone spindle (8) and the push rod (4). Tilting the screwdriver forces the pilot cone down, and the valve opens to full cooling water flow.
If still the water valve does not close tightly, shut off the cooling water supply to the water valve. Unscrew the strainer assembly (19) and clean both the strainer and the pilot nozzle.
If the strainer or pilot nozzle is not clogged up, dismount the top part (6) and the valve cover (12), which can be done without relieving the system of its pressure. Remove the strainer assembly from the valve cover, clean it, and apply a coat of water-resistant, acid-free grease to it. Fill the same kind of grease into the space over the Teflon sleeves (9). It may be necessary to grind the pilot cone in its seat.
Clean the servo piston and valve seat and apply a coat of water-resistant, acid-free grease to the servo cylinder and the servo piston guide.
The pilot channels in the valve cover can be cleaned after the screws have been unscrewed from the sides of the valve cover.
Check whether the O-rings need replacement.
After fitting or overhaul the water valve must be flushed vigorously for some minutes in order to remove any impurities from pipelines, etc. See Fig. 4.
If there is any risk of the valve bursting due to frost during standstill periods, it should be drained of water. It can be done by unscrewing the drain plug (17) and the bottom screw (16).

DEUTSCH

Thermostatische Wasserventile

Technische Daten

1. Fühler
2. Stopfbüchse
3. Wellrohrelement
4. Druckbolzen
5. Regelmutter
6. Einstellgehäuse
6a. Deckel
7. Piloteinsatz
8. Pilotkegel
9. Teflonmanschetten
10. Isolierscheibe
10a. Dichtung f. Piloteinsatz
11. O-Ring f. Piloteinsatz
12. Deckel
13. O-ring f. Deckel *
14. O-Ring f. Pilotkanal
15. Servokolben
16. Bodenschraube f. Servokolben
17. Bodenstopfen
18. Dichtung f. Bodenstopfen
19. Filtereinsatz, komplett
20. Selbstreinigendes Filter
21. Pilotdüse
22. Dichtung
23. O-Ring
24. Servofeder **

* Ventilgrösse angeben
** Siehe Tabelle, Abb. 5.

Max. Prüfdruck
16 atü (p_e = 16 bar)

Öffnungsdifferenzdruck
WVTS 32-40: min. 0.5 at (0.5 bar)
max. 4 atm. (4 ba).
WVTS 50-100: min. 0.3 atm. (0.3 bar)
max. 4 atm. (4 bar).

Wenn das Ventil WVTS mit einem Differenzdruck von 1 - 10 at (1 - 10 bar) gewünscht wird, so ist die Servofeder (24) auszuwechseln. Siehe Bestelltabelle, Abb. 5.

Zulässige Medientemperaturen
Wasser: max. +90°C
Sole: min. –25°C

Max. Fühlertemperaturen
57°C in den Bereichen –15°C bis +10°C und 0°C bis +30°C.
90°C im Bereich +25°C bis +65°C.

Montage
WVTS wird mit nach oben gerichtetem Well-rohrelement und mit Durchfluss in Pfeilrichtung in den Kühlwassereintritt eingebaut. Es emp-fiehlt sich, vor dem Ventil ein Schmutzfilter einzubauen.
Der Fühler ist an der Stelle anzuordnen, wo man die Sollwerttemperatur des Wassers einzuhalten wünscht. Der Fühler kann ohne Beeinträchtigung der Regelfähigkeit beliebig wärmer oder kälter als das Ventilgehäuse angebracht werden.
Bei Ventilen mit dem Bereich –15°C bis +10°C kann der Fühler in beliebiger Lage angeordnet werden.
Bei Ventilen mit den übrigen Bereichen ist der Fühler waagerecht oder mit dem freien Fühlerende zuunterst zu montieren. Bei einem waagerechten oder schrägen Fühlereinbau müssen die am Fühler angebrachten Buchstaben UP sowie der rote Strich nach oben zeigen.
An Verflüssigern (Abb. 3) kann der Fühler entweder mittels Schellen an der Austrittleitung befestigt, in eine Fühlerhülse des Austritts eingeführt oder auch in direktem Kontakt mit dem Kühlwasser angebracht werden. Bei der Inbetriebsetzung der Anlage muss der Fühler sofort auf Temperaturschwankungen im durchströmenden Kühlwasser ansprechen können. Daher kann zur Sicherung eines Kühlwasserdurchflusses in der Anlaufphase eine absperrbare Umlaufleitung erforderlich sein. Bei einer Fühlermontage in direktem Kontakt mit dem Kühlwasser ist der Fühler so zu befestigen, dass er nicht durch Pulsationen gelockert werden kann, weil dabei das Kapillarrohr zerstört werden könnte. Bei Verwendung einer Fühlerhülse ergibt sich eine gute Wärmeübertragung, wenn man den Zwischenraum zwischen Fühler und Hülse mit Kupferpaste ausfüllt. Bei Luftkompressoren u. dergl. ist der Fühler im Kühlwassermantel anzuordnen. Dabei erübrigt sich eine Umlaufleitung, weil die beim Kompressoranlauf entstehende Erwärmung des Wassers einen ausreichenden Impuls an den Fühler abgibt.

Einstellung
An der Montagestelle des Fühlers ist ein Thermometer anzubringen.
Deckel (6a) entfernen. Mit Hilfe der Regelmutter (5) wird nun der Mediendurchfluss eingeregelt, bis das Thermometer die an der Austrittseite gewünschte Temperatur anzeigt. Durch Linksdrehen der Regelmutter (5) (Lockern der Regelfeder) ergibt sich eine niedrigere Temperatur- und umgekehrt.
Sobald die Kälteanlage ausschaltet, geht die Temperatur am Fühler zurück und das Ventil WVTS wird schliessen.

Wartung
Bei stillgesetzter Kälteanlage muss das Wasserventil die Kühlwasserzufuhr völlig absperren. Ist dies nicht der Fall, können sich möglicherweise an den Ventilsitzen des Servokolbens oder des Pilotkegels grössere Schmutzteilchen festgesetzt haben. Vielleicht sind auch das Filter (20) oder die Pilotdüse (21) verstopft.

Abb. 4 zeigt, wie man möglicherweise Schmutzteilchen entfernen kann. Zwischen die Spindel des Pilotkegels (8) und den Druckbolzen (4) steckt man einen Schraubenzieher und drückt damit den Pilotkegel nach unten, sodass dabei das Ventil den vollen Kühlwasserdurchfluss freigibt.
Wenn danach das Ventil immer noch nicht völlig dicht absperrt, so muss die Kühlwasserzufuhr unterbrochen werden. Darauf sind der Filtereinsatz (19) auszuschrauben und Filter und Pilotdüse zu reinigen.
Wenn keine Verstopfung des Filters oder der Pilotdüse festgestellt werden konnte, müssen das Einstellgehäuse (6) und der Ventildeckel (12) ausgebaut werden.
Dieser Ausbau kann bei unter Druck stehender Anlage erfolgen. Piloteneinsatz aus dem Ventildeckel herausnehmen, reinigen und mit einem wasserbeständigen säurefreien Fett schmieren. Der Raum über den Teflon-manschetten (9) ist mit dem gleichen Schmierfett zu füllen. Unter Umständen muss der Pilotkegel neu in den Pilotsitz eingeschliffen werden.
Servokolben und Ventilsitz reinigen. Servozylinder und Führung des Servokolbens mit wasserfestem, säuerfreiem Fett schmieren.
Die Pilotkanäle im Ventildeckel lassen sich nach Entfernung der Schrauben aus den Deckelseiten reinigen.
Prüfen, ob eine Auswechslung der O-Ringe erforderlich ist.
Nach dem erneuten Zusammenbau - und überhaupt nach jeder Inspektion - muss das Ventil einige Minuten lang gründlich durchgespült werden, um etwaige Schmutzteilchen aus Rohrleitungen usw. zu entfernen. Siehe Abb. 4.
Wenn in Standzeiten die Gefahr einer Frostsprengung des Ventils besteht, so sollte man das Wasser daraus ablassen. Zu diesem Zweck sind der Bodenstopfen (17) und die Schraube (16) zu enffernen.

FRANÇAIS

Vannes thermostatiques à eau

Caractéristiques techniques

1. Bulbe
2. Presse-êtoupe
3. Elément du soufflet
4. Tige de pression
5. Ecrou de réglage
6. Boîtier de réglage

6a. Couvercle

7. Cartouche pilote
8. Cône pilote
9. Manchons en téflon
10. Disque isolant

10a. Joint pour cartouche pilote

11. Bague torique pour cartouche pilote
12. Couvercle
13. Bague torique pour couvercle *
14. Bague torique pour canal pilote
15. Servo-piston *
16. Vis de fond pour servo-piston
17. Bouchon de fond
18. Joint pour bouchon de fond
19. Cartouche de filtre, complète *
20. Filtre autonettoyant
21. Orifice pilote
22. Joint
23. Bague torique
24. Servo-ressort **

* Indiquer la dimension de la vanne
** Voir le tableau, fig. 5

Pression d'essai max.
16 atm.eff. (p_e = 16 bar = 1600 kPa).

Pression différentielle d'ouverture
WVTS 32-40: min. 0.5 atm. (0.5 bar = 50 kPa); max. 4 atm. (4 bar = 400 kPa).
WVTS 50-100: min. 0.3 atm. (0.3 bar = 30 kPa); max. 4 atm. (4 bar = 400 kPa).
Si l'on désire une WVTS avec une pression différentielle de 1 - 10 atm. (1 - 10 bar; 100 - 1000 kPa), le servo-ressort (24) doit être remplacé. Voir le tableau de commande, fig. 5.

Température admissible du médium
Pour eau: max. +90°C
Pour saumure: min: –25°C.

Température max. du bulbe
57°C pour la plage: –15°C à +10°C et 0°C à +30°C.
90°C pour la plage: +25°C à +65°C.

Montage

Monter la WVTS dans l'entrée de l'eau de refroidissement, pour passage du liquide dans le sens de la flèche et l'élément de soufflet orienté vers le haut. Il est recommandé de monter un filtre à saletés en amont de la vanne.
Monter le bulbe à l'endroit où l'on désire maintenir l'eau à la température désirée. Sans influencer la capacité de régulation, le bulbe peut être placé dans une ambiance plus chaude ou plus froide que celle du corps de vanne.
Pour les vannes de la plage allant de –15°C à +10°C, le bulbe peut être monté dans une position quelconque.
Pour les vannes des autres plages, le bulbe doit être monté horizontalement ou avec son extrémité libre placée au niveau le plus bas.
En cas d'un montage horizontal ou oblique, les lettres UP ainsi que le trait rouge sur le bulbe doivent tourner vers le haut. Sur les condenseurs (fig. 3), le bulbe peut être soit fixé sur la conduite de sortie au moyen d'un collier de serrage, soit monté dans une poche à bulbe sur la conduite de sortie, soit placé en contact direct avec l'eau de refroidissement.
Au démarrage de l'installation, le bulbe doit pouvoir être exposé immédiatement à l'influence des variations de température de l'eau de refroidissement en circulation. Par conséquent, il peut être nécessaire de prévoir un by-pass avec vanne d'arrêt pour assurer un courant d'eau de refroidissement à la mise en marche.
Si le bulbe est monté en contact direct avec l'eau de refroidissement, le fixer de sorte que des impulsions ne puissent pas l'influencer et détériorer le tube capillaire de ce fait.
En cas d'utilisation d'une poche à bulbe on obtient une bonne transmission dé chaleur si la poche est bourrée de pâte de cuivre.
Sur les compresseurs d'air et machines analogues, monter le bulbe dans la chemise remplie d'eau de refroidissement. Dans ce cas-là, un by-pass n'est pas nécessaire. Le réchauffage de l'eau à la mise en marche du compresseur assure toujours une impulsion suffisante au bulbe.

Réglage

Placer un thermomètre à l'endroit où est monté le bulbe.
Enlever le couvercle (6a). Au moyen de l'écrou de réglage (5), régler le passage du médium jusqu'à ce que le thermomètre indique la température désirée du côté sortie.
Une température plus basse est obtenue en tournant l'écrou de réglage (5) vers la gauche (le ressort de réglage est déchargé) – et inversement.
A l'arrêt de l'installation frigorifique, la température au bulbe baisse et, par conséquent, la WVTS se ferme.

Entretien

A l'arrêt de l'installation frigorifique, la vanne doit couper totalement le passage de l'eau de refroidissement. Si ce n'est pas le cas, cela peut être dû à ce que des particules de saleté assez grosses se sont fixées sur le siège du servo-piston ou du cône pilote. Le filtre (20) ou l'orifice pilote (21) sont peut-être bouchés.
On peut essayer d'enlever les saletés comme montré fig. 4. Introduire un tournevis entre la tige (8) du cône pilote et la tige de pression (4). En basculant le tournevis, le cône pilote est pressé vers le bas et la vanne s'ouvre pour le plein passage de l'eau de refroidissement.
Dans le cas ou la vanne à eau ne ferme toujours pas hermétiquement, couper l'accès d'eau de refroidissement à la vanne. Dévisser la cartouche de filtre (19) et nettoyer tant le filtre que l'orifice pilote. Si ni le filtre ni l'orifice pilote ne sont bouchés, démonter la partie supérieure (6) et le couvercle (12) de la vanne. La partie supérieure et le couvercle de la vanne peuvent être démontés sans décharger l'installation. Sortir la cartouche pilote du couvercle de la vanne, la nettoyer et la graisser avec une graisse non acide résistante à l'eau. Remplir l'espace au- dessus des manchons en téflon (9) de la même graisse. Peut-être faut-il roder le cône pilote dans le siège pilote.
Nettoyer le servo-piston et le siège de la vanne et enduire le servo-cylindre et le guide du servo-piston d'une graisse non acide résistante à l'eau.
Les canaux pilotes du couvercle de la vanne peuvent être nettoyés après avoir dévissé les vis des côtés du couvercle de la vanne.
Examiner si les bagues toriques doivent être remplacées.
Après le montage ou après un entretien il est nécessaire, pendant quelques minutes, de purger énergiquement la vanne afin éliminer des conduites etc. d'éventuelles saletés. Voir fig. 4.
En cas de risque d'éclatement par le gel de la vanne pendant les périodes d'arrêt, celle-ci doit être vidée. A cet effet, enlever le bouchon de fond (17) et la vis (16).

Produced by Danfoss G1 advertising agency 98.09 Bi.CCB

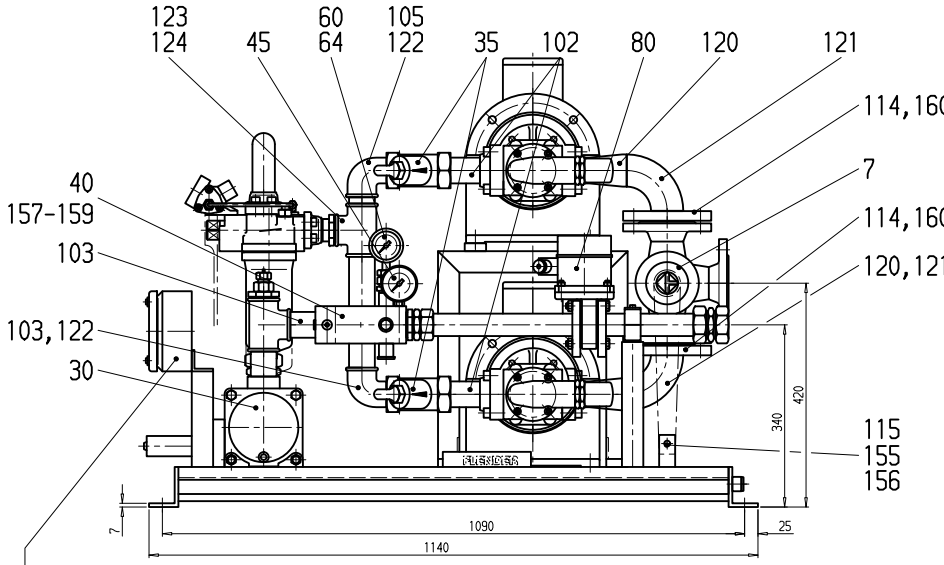

Klemmenkasten und Verdrahtung nur im Auftragsfall
TERMINAL BOX AND WIRING ONLY ON ORDER

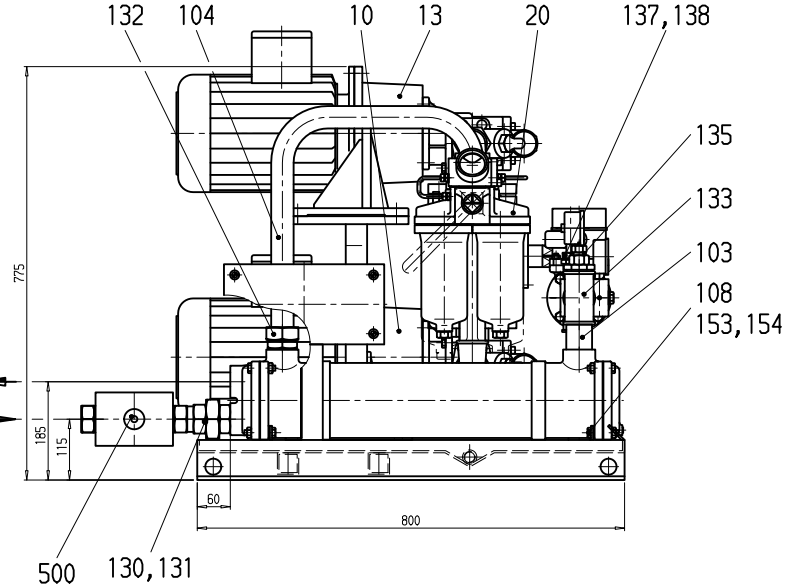

Kühlwasseraustritt G 1 1/2
COOLING WATER OUTLET

Kühlwassereintritt G 1 1/2
COOLING WATER INLET

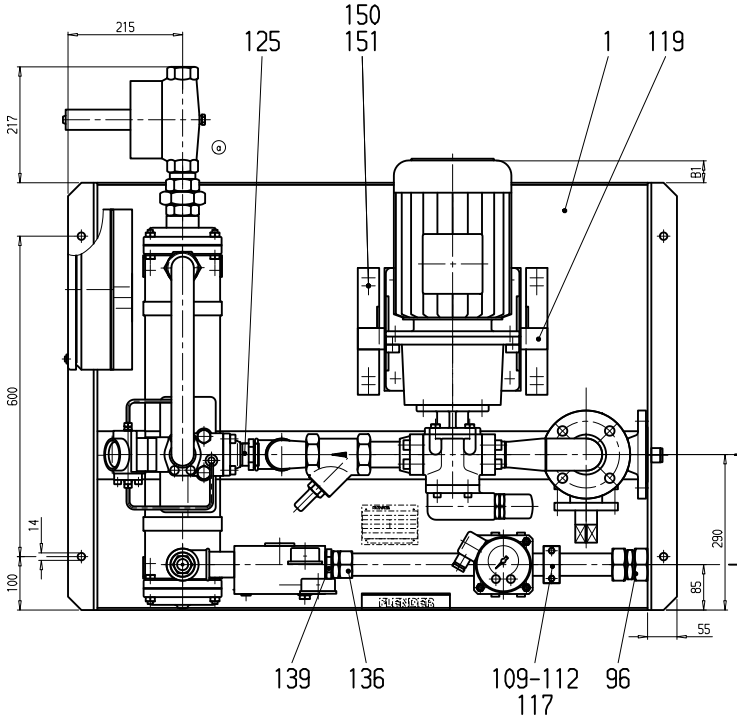

Saugleitung Flansch DN 50 DIN 2532/PN10
SUCTION PIPE FLANGE

Druckleitung
PRESSURE PIPE

* OIL SUPPLY SYSTEM

2	A3	Schmierschema
1	A1	.
Blatt	Format	Hinweis

Tabelle 1 / TABLE 1

BAUGRÖSSE SIZE	ANSCHLUSS CONNECTION Druckleitung PRESSURE PIPE	B 1 (mm)	Gewicht (kg) WEIGHT
	ROHR PIPE Ø .../DIN 2391		
5	35	40	245
6	42	80	265

ANSCHLUSSQUERSCHNITTE GELTEN
FÜR MAX. 3M ROHRLÄNGE
EINSCHL. 3 ROHRBÖGEN UND
FÜR ANFAHRVISKOSITÄT 3200 CST.
GEODÄTISCHER HÖHENUNTERSCHIED = 0
CONNECTION CROSS SECTIONS VALID FOR
MAX. PIPE LENGTH OF 3M INCL.
3 PIPE BENDS AND FOR
STARTING VISCOSITY 3200 CST.
GEODATIC LEVEL DIFFERENCE = 0

Äl	Feld	Änderungsbeschreibung	Datum	Name	Norm	
a	D11	Kühlwassermengenregular geändert	2004-07-07	VGS	OK	2004-07-08
						2004-01-21 gesichert

Auftr.-Nr. .

Tolerierung nach DIN ISO 8015

Allgemeintoleranzen <30 ±0,3 sonst nach DIN ISO 2768-mH

FLENDER

Werkstoff /-Nr. .

Nicht gekennzeichnete Oberflächen: .

Rauhwerte Ra in µm

Gez.	TFA	2004-01-20	Grewe
Gepr.	TFA	2004-01-20	Grewe
Norm	TFA	.	.
	Abt.	Datum	Name

Maßstab 1:5

Gewicht (kg)

Trägheitsmoment J (kgm²) .

Gewicht (kg) SEE TABLE 1

Basis-Nr. Äl Modell-Nr. Ä Anz. Teil

Benennung Schl.-Nr.: 0348

* OELVERSORGUNGSANLAGE

OWGD 5/6 VARIANTE 9
OWGD 5/6 VARIANTE 9

Blatt 1 von 2
SHEET 1 OF 2

Rohteil nach Zeichnung .

sonst nach Zeichnung .

Format Art Zeichnungs-Nr. Äl
6 . 6 043 465 a

Ersatz für . Aus Zchng. 5 475 227

Maße in mm

Schutzvermerk ISO 16016 beachten

DE EN FR SP IT PO SU SW NL DK

PLOTT-DATUM: 08-MAY-2006 15:44:27 H. Raschig/HDVZ

219/428

SCHMIERSCHEMA
LUBRICATION DIAGRAM

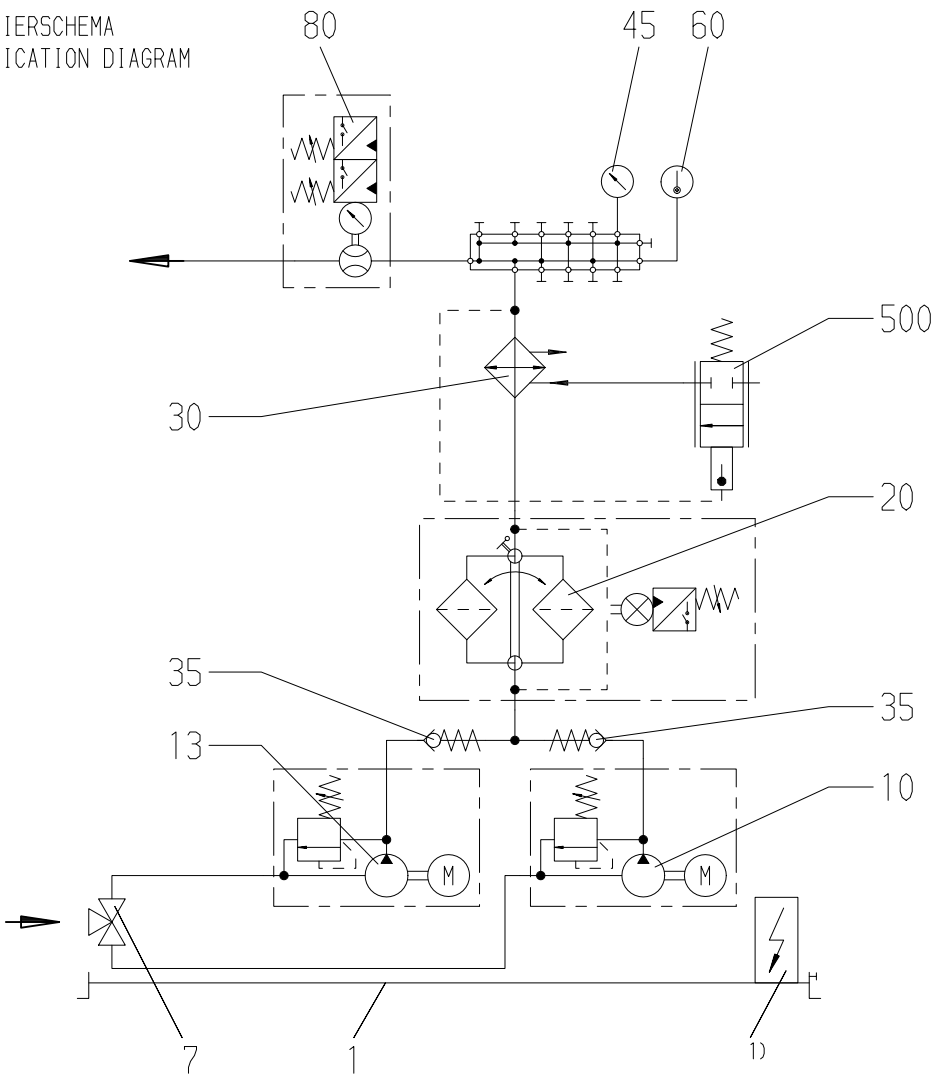

	Teil Nr. PART NO.
Grundrahmen BASE FRAME	1
Dreiwegehahn, Saugleitung THREE-WAY COCK, SUCTION PIPE	7
2 Pumpengruppen, Druckbegrenzungsventil 2 PUMP GROUPS, PRESSURE LIMITATION VALVE	10,13
Doppel-Schaltfilter DOUBLE CHANGE-OVER FILTER	20
Wasser-Ölkühler WATER-OIL COOLER	30
2 Rückschlagventile 2 NON-RETURN VALVES	35
Manometer MANOMETER	45
Thermometer THERMOMETER	60
Strömungswächter FLOW CONTROL	80
Kühlwassermengenregler COOLING WATER FLOW CONTROL	500

1) Klemmenkasten und Verdrahtung nur im Auftragsfall
1) TERMINAL BOX AND WIRING TO BE ORDERED SEPARATELY

* OIL SUPPLY SYSTEM

a	.	Siehe Blatt 1	2004-07-07	VGS	OK	2004-07-08
ÄI	Feld	Änderungsbeschreibung	Datum	Name	Norm	2004-01-21
		Auftr.-Nr. .				gesichert

Tolerierung nach DIN ISO 8015

Allgemeintoleranzen ≤30 ±0,3 sonst nach DIN ISO 2768-mH

FLENDER

Werkstoff /-Nr. . .

Benennung Schl.-Nr.: 0348

* OELVERSORGUNGSANLAGE

Nicht gekennzeichnete Oberflächen: .

Rauhwerte Ra in µm

Gez.	TFA	2004-01-20	Grewe
Gepr.	TFA	2004-01-20	Grewe
Norm	TFA	.	.
	Abt.	Datum	Name

Maßstab 1:1 Gewicht (kg)

Trägheitsmoment J (kgm²) . .

Basis-Nr. ÄI Ä Anz. Teil
Modell-Nr.

OWGD 5/6 VARIANTE 9
OWGD 5/6 VARIANTE 9

Blatt 2 von 2
SHEET 2 OF 2

Rohteil nach Zeichnung .

sonst nach Zeichnung .

Format Art Zeichnungs-Nr. ÄI
8 . 6 043 465 a

Ersatz für . Aus Zchng. 5 475 227

Blatt	Format	Hinweis
2	A3	.
1	A1	Oelversorgungsanlage

Maße in mm

Schutzvermerk ISO 16016 beachten

DE EN FR SP IT PO SU SW NL DK

PLOTT-DATUM: 08-MAY-2006 15:44:24 H. Raschig/HDVZ

2201428

/B0

CAD-DRAWING TO BE MODIFIED ON THE MONITOR ONLY

THIS TECHNICAL DOCUMENT IS REGISTERED (DIN 34)

Zeile Line	1 Änd. Rev.	2 Benennung Description	3 Blatt Sheet	4 Planart Plantyp	5 Anlage Unit	6 Gruppe Group	7 Ort Place
1		Inhaltsverzeichnis Table of contents	1	INH			
2		Aufbauplan Cabinet layout	1	SSL			
3		Überwachung Monitoring	1	STR			
4		Klemmenplan Connection plan	1	VKL		-X9	
5		* *					
6		* *					
7		* *					
8		* *					
9		* *					
10		* *					
11		* *					
12		* *					
13		* *					
14		* *					
15		* *					
16		* *					
17		* *					
18		* *					
19		* *					
20		* *					

Zeile Line	1 Änd. Rev.	2 Benennung Description	3 Blatt Sheet	4 Planart Plantyp	5 Anlage Unit	6 Gruppe Group	7 Ort Place
21		* *					
22		* *					
23		* *					
24		* *					
25		* *					
26		* *					
27		* *					
28		* *					
29		* *					
30		* *					
31		* *					
32		* *					
33		* *					
34		* *					
35		* *					
36		* *					
37		* *					
38		* *					
39		* *					
40		* *					

Rev.	Discription
1	

2

Order No. = 5 6 . 7 + 4 3 Sh.

Rev	Description	Date	Name					
				Date	25.11.02			
				Drawn	TBK			
				Checked	TBK			
				Norm	DIN	Made from	In exchange for	exchanged thru

FLENDER

Inhaltsverzeichnis

Table of contents

5 353 879

Order No. 425.104.013/005

INH 1 / 1 Sh.

3

CAD-DRAWING TO BE MODIFIED ON THE MONITOR ONLY

THIS TECHNICAL DOCUMENT IS REGISTERED (DIN 34)

Typ: 1515.210 (300x150x80)

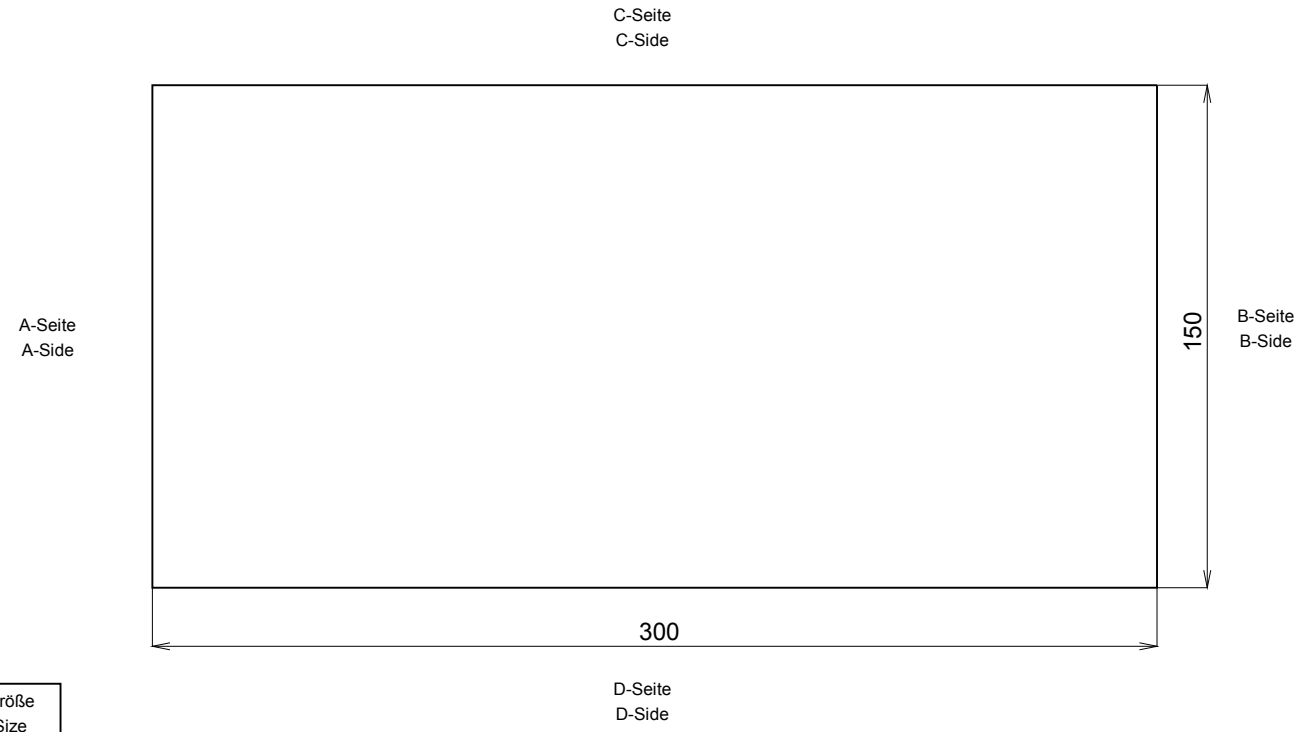

A-Seite A-Side	B-Seite B-Side	C-Seite C-Side	D-Seite D-Side	Größe Size
Verschraubungen / Cable glands				
				M12
			2	M16
				M20
				M25
				M32
Verschlußstopfen / Plugs				
				M12
				M16
				M20
			1	M25
				M32

Rev	Description	Date	Name					
				Date	25.11.02			
				Drawn	TBK			
				Checked	TBK			
				Norm	DIN	Made from	In exchange for	exchanged thru

FLENDER

Aufbauplan

Cabinet layout

5 353 879

Order No. 425.104.013/005

SSL

1

1 Sh.

3

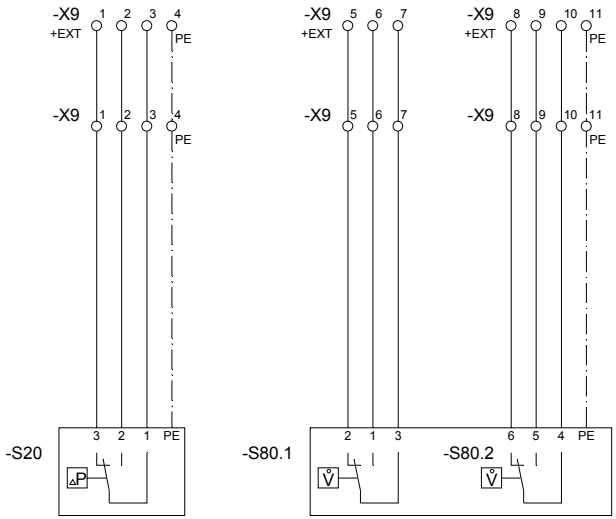

Differenzdruckwächter
Differential pressure monitor
Commutateur de Presion Differentielle

Volumenstrom-Meßgerät
Volume flow meter
Debitmetre

				Date	25.11.02				FLENDER	Überwachung	5 353 879	Order No. 425.104.013/005	
				Drawn	TBK								
				Checked	TBK					Monitoring		STR	1 / 1 Sh.
Rev	Description	Date	Name	Norm	DIN	Made from	In exchange for	exchanged thru					

Verbindungsleitungen Conecting lines	Zielbezeichnung Richtung Maschine Target description maschine direction				Klemmenleiste Terminal strip -X9					Zielbezeichnung Richtung Schaltschrank Target description cabinet direction			
	Kennzeichen Designation			Anschl. Connec.	Typ Typ	Brücke Jumper	Klemme Terminal	A mm² A mm²	Schaltplanposition Wiring diagram pos.	Kennzeichen Designation			Anschl. Connec.
	=	+	-	:				max.	STR	=	+	-	:
		+EXT	-X9	1	UK5N		1	4.0	STR/1.1			-S20	3
		+EXT	-X9	2	UK5N		2	4.0	STR/1.2			-S20	2
		+EXT	-X9	3	UK5N		3	4.0	STR/1.2			-S20	1
		+EXT	-X9	4	USLKG 5		4	4.0	STR/1.2			-S20	PE
		+EXT	-X9	5	UK5N		5	4.0	STR/1.2			-S80.1	2
		+EXT	-X9	6	UK5N		6	4.0	STR/1.3			-S80.1	1
		+EXT	-X9	7	UK5N		7	4.0	STR/1.3			-S80.1	3
		+EXT	-X9	8	UK5N		8	4.0	STR/1.3			-S80.2	6
		+EXT	-X9	9	UK5N		9	4.0	STR/1.3			-S80.2	5
		+EXT	-X9	10	UK5N		10	4.0	STR/1.3			-S80.2	4
		+EXT	-X9	11	USLKG 5		11	4.0	STR/1.3			-S80.2	PE

Rev	Description	Date	Name					
				Date	25.11.02			
				Drawn	TBK			
				Checked	TBK			
				Norm	DIN	Made from	In exchange for	exchanged thru

FLENDER

Klemmenplan

Connection plan

5 353 879

Order No. 425.104.013/005

. -X9

VKL

1

1 Sh.

Part No.	Qty.	Description	Manufacturer Operating instruction
		Switching and monitoring functions in accordance with: **Lubrication schedule drawing no. 6 043 465-2 a** **Oil–supply system type OWGD, size 05 variant 9** **Assembly drawing no. 6 043 465-1 a** **Terminal diagram drawing no. 5 353 879** **refer also to Operating Instructions BA 9702 EN 05.98**	
7	1	**Three–way valve** Type/No.: 14-070 as per DIN 3472 Connection DN 50 Nominal pressure PN 10 Housing material GG with valve key Place of installation: suction side	**ERICHLANDWEHR** BA ELW.HAH.000 ..
10	1	**Gear pump** Type to FLENDER works standard: F 5958 Size 5 (SF 3/32 RD–VLFM) Nominal pressure : PN 25 Housing material: GG-25 Rotation speed:1430 1/min Oil flow rate approx. 52 l/min Starting temperature > 10 °C Operating pressure: < 8 bar Direction of rotation: right with pressure relief valve set to p > 8 bar directly coupled with:	**STEIMEL** BA STE.PUM.000 ..
	1	**Three-phase motor** Type B5 Size 100 L-04 Speed 1430 1/min Output 3 kW Voltage 3x380...420 V IEC38) Frequency 50 Hz Insulation class F Type of protection: IP 55 Efficiency: EFF1	**SIEMENS** BA 610.42348.21 a ..
13	1	**Gear pump** Type to FLENDER works standard: F 5958 Size 5 (SF 3/32 RD–VLFM) Nominal pressure : PN 25 Housing material: GG-25 Rotation speed:1430 1/min Oil flow rate approx. 52 l/min Starting temperature > 10 °C Operating pressure: < 8 bar Direction of rotation: right with pressure relief valve set to p > 8 bar directly coupled with:	**STEIMEL** BA STE.PUM.000 ..

Diese technische Unterlage hat gesetzlichen Schutz (DIN 34)

Part No.	Qty.	Description	Manufacturer Operating instruction
	1	**Three-phase motor** Type B5 Size 100 L-04 Speed 1430 1/min Output 3 kW Voltage 3x380...420 V IEC38) Frequency 50 Hz Insulation class F Type of protection: IP 55 Efficiency: EFF1	**SIEMENS** BA 610.42348.21 a ..
20	1	**Double change–over filter** Type to FLENDER works standard: W5921 Type/No.: 32.25 .2.F2 Connection DN 32 Nominal pressure PN 16 Oil flow rate approx. 52 l/min Housing material GG-20 Material filter dome GK-Al Filter fineness 25 µm Filter element of VA metal fabric with optical differential pressure display **with electrical differential pressure monitor** Type/No.: 2.F2 Number of switching contacts: 1 Contact rating: 1 A / 250 V AC / 60 VA 1 A / 250 V DC / 30 W Type of protection: IP 65 > 2 bar **:***WARNING* (Clean filter)	**FLENDER** B 5921
30	1	**Water oil–cooler** Type/No.: OELK 03 (AM 13 JFL 24 D) Quantity of heat to be dissipated 14,9 kW Oil flow rate approx. 52 l/min Oil temperature cooler input/output: 70 / 60 °C Cooling water quantity required 2,4 m^3/h Water temperature cooler input/output: 35 / 40 °C Execution: resistant to brackish water	**SERCK** BA SER.KUE.001 ..
35	2	**Non–return valve** To Flender works standard W 5916 Connection G 1 1/2 Nominal pressure PN 16 Housing material: chromated brass Place of installation: pressure side	**FLENDER** B 5916

Diese technische Unterlage hat gesetzlichen Schutz (DIN 34)

Part No.	Qty.	Description	Manufacturer Operating instruction
45	1	**Manometer** Type to Flender works standard: W 5914 Connection G 1/4 Nominal size NG 63 Grade of accuracy: 1,6 (DIN 16005) Filling measurement device Glycerine Housing material: VA Measurement range 0-10 bar / 0-140 PSI	**FLENDER** B 5914
60	1	**Thermometer** Type to Flender works standard W 5924 Connection: G 1/2 Nominal size NG 63 Grade of accuracy: 1 (DIN 16203) Filling measurement device Glycerine Housing material: VA Measurement range –20 ... +120 °C / -4 ... +249 °F with proctective tube type/no.: FLENDER G 1/2 x 100 Connection protective tube G 1/2 length of protective tube 100 mm	**FLENDER** B 5924
80	1	**Flow monitor** Type to Flender works standard W 5927 with optical display Oil flow rate approx. 52 l/min corresponds to scale reading approx. 93 % Measurement range 17-54 l/min Number of switching contacts: 2 Contact rating: 5 A / 250 V AC / 500 VA 0.4 A / 30 V DC / 25 W Type of protection: IP 65 V80.1 < 80 % oil flow rate = scale reading 74 % :*WARNING* V80.2 < 70 % oil flow rate = scale reading 65 % :*GEAR UNIT STOP*	**FLENDER** B 5927
		Connection water side:	
500	1	**Cooling water flow regulator** Type/No.: WVTS 40 Nominal width: G 1 1/2 Nominal pressure: 16 bar Housing material: GG Connection pipe length: 2 m with immersion tube Type/No.: 017–4367 Connection immersion tube:G 1/2 Immersion tube length: 210 mm Adjustment range: 25 - 65 °C	**DANFOSS** BA DAN.VEN.001 ..

Diese technische Unterlage hat gesetzlichen Schutz (DIN 34)

Operating Instructions

BA 5012 EN 10.98

Crane gear units of types
K.SH, K.VH, K.HH, K.KH, K.DH, K.HM, K.KM, K.DM
Sizes 5 to 14

K.SH
K.VH

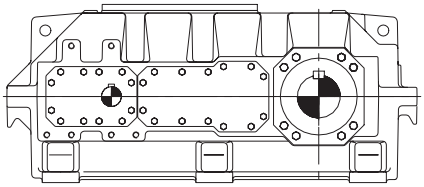

K.HH
K.KH

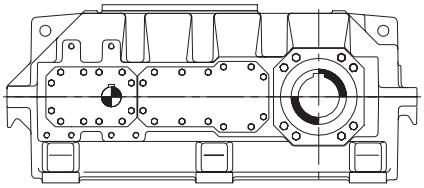

K.DH

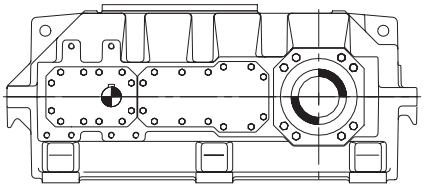

K.HM
K.KM

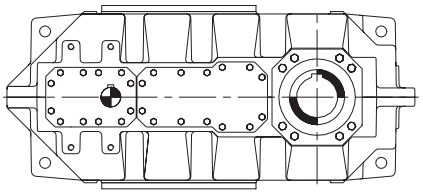

K.DM

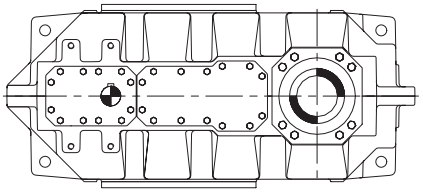

FLENDER

A. Friedr. Flender AG · 46393 Bocholt · Tel. 02871/92-0 · Telefax 02871/92-2596 · www.flender.com

Contents

1.	**Technical data**	**4**
1.1	General technical data	4
1.1.1	Weights	5
1.1.2	Measuring-surface sound level	5
2.	**General notes**	**6**
2.1	Introduction	6
2.2	Copyright	6
3.	**Safety notes**	**7**
3.1	Proper use	7
3.2	Obligations of the user	7
3.3	Environmental protection	8
3.4	Special dangers	8
3.5	Warnings and symbols used in these Instructions	8
4.	**Handling and storage**	**8**
4.1	Scope of supply	8
4.2	Handling	8
4.3	Storage	9
4.4	Standard corrosion protection	10
5.	**Technical description**	**10**
5.1	General description	10
5.2	Housing	12
5.3	Toothed components	12
5.4	Lubrication	12
5.5	Bearings	12
5.6	Shaft seals	13
5.6.1	Radial shaft sealing rings	13
5.6.2	Taconite seals	13
5.7	Cooling	15
5.8	Couplings	15
6.	**Assembly**	**15**
6.1	General information on installation	15
6.2	Installation of gear unit on housing base	16
6.2.1	Foundation	16
6.2.2	Description of installation work	16
6.2.2.1	Aligning surfaces, aligning thread	17
6.2.2.2	Mounting on a foundation frame	17
6.3	Assembly of a shaft-mounting gear unit with hollow shaft and parallel-keyway	18
6.3.1	Assembly	18
6.3.1.1	Fitting	18
6.3.1.2	Axial securing device	18
6.3.2	Dismantling	19
6.4	Shaft-mounting gear unit with hollow shaft and internal spline to DIN 5480	20
6.4.1	Assembly	20
6.4.1.1	Fitting	21
6.4.1.2	Axial securing device	21
6.4.2	Dismantling	22

6.5 Shaft-mounting gear unit with hollow shaft and shrink disk 23
6.5.1 Assembly 23
6.5.1.1 Fitting 24
6.5.1.2 Axial securing device 24
6.5.2 Shrink disk type HSD 25
6.5.2.1 Assembly of shrink disk 25
6.5.2.2 Removing the shrink disk 26
6.5.2.3 Cleaning and greasing the shrink disk 26
6.5.3 Dismantling 27
6.6 Mounting the torque arm for gear housing 28
6.6.1 Attaching the torque arm 28

7. Start-up 29
7.1 Procedure before start-up 29
7.1.1 Removal of conservation agent 29
7.1.2 Charging with lubricant 29
7.1.2.1 Oil quantities 30
7.2 Start-up 30
7.3 Removal from service 30
7.3.1 Interior conservation during longer disuse 30
7.3.1.1 Interior conservation with gear oil 30
7.3.1.2 Interior conservation with special conservation agent 30
7.3.1.3 Interior conservation procedure 31
7.3.2 Exterior conservation 31
7.3.2.1 Exterior conservation procedure 31

8. Operation 32
8.1 General operating data 32

9. Disturbances, reasons and remedy 32
9.1 General information on faults and malfunctions 32
9.2 Possible faults 33

10. Maintenance and repair 34
10.1 General notes on maintenance 34
10.2 Description of maintenance and repair work 35
10.2.1 Test water-content of oil 35
10.2.2 Changing the oil 35
10.2.3 Cleaning the venting screw 36
10.2.4 Re-charging Taconite seals with grease 36
10.2.5 Cleaning the gear unit 36
10.2.6 Topping up oil 37
10.2.7 Check tightness of fastening bolts 37
10.2.8 General inspection of gear unit 37
10.3 Lubricants 38

11. Spare parts, service facility addresses 38
11.1 Stocking spare parts 38
11.2 Spare-part and service facility addresses 39

12. Declaration by the manufacturer 44

1. Technical data

1.1 General technical data

The most important technical data are shown on the rating plate. These data along with the contractual agreements on the gear unit determine the limits of its proper use.

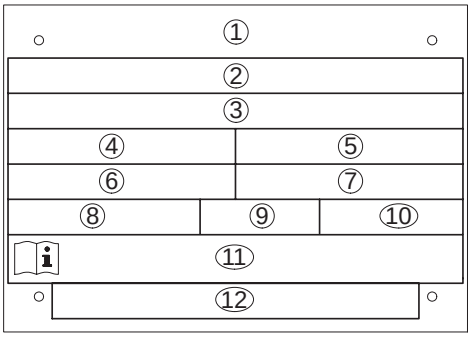

①	Company logo and production location	⑦	Speed n_2
②	Special information	⑧	Type of oil
③	Order no. - item - serial no.	⑨	Viscosity of oil in VG class
④	Type / Size *)	⑩	Quantity of oil in litres for main gear housing
⑤	Power rating P in kW or T_2 in Nm	⑪	Number of operating instruction(s)
⑥	Speed n_1	⑫	Special information

e.g. *)

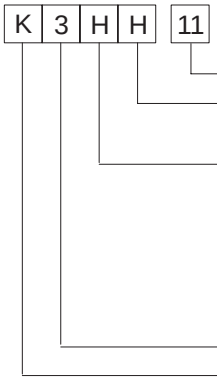

Size . . . . . 5 ... 14
Installation . . . . . H = horizontal
M = horizontal design without base
Type of output shaft . . . . . S = solid shaft
V = solid shaft, reinforced
H = hollow shaft with parallel-keyway
D = hollow shaft for shrink disk
K = hollow shaft with internal-spline to DIN 5480
Number of stages . . . . . 3 or 4
Gear-unit type . . . . . K = helical gear unit

Data on weights and measuring surface sound levels of the various gear types are given in sections 1.1.1 and 1.1.2.

For further technical details, refer to the drawings in the gear-unit documentation.

1.1.1 Weights

Type	Approx. weight (kg) for size									
	5	**6**	**7**	**8**	**9**	**10**	**11**	**12**	**13**	**14**
K3SH, K3VH, K3HH ,K3KH, K3DH	380	440	605	690	955	1100	1535	1820	2400	2860
K3HM, K3KM, K3DM	370	430	595	675	890	1035	1475	1750	2270	2710
K4SH, K4VH, K4HH ,K4KH, K4DH	385	445	615	700	975	1120	1565	1850	2445	2910
K4HM, K4KM, K4DM	375	435	605	685	910	1055	1505	1780	2315	2760

Table 1.1: Weights (approx. values only)

Note: All weights are for gear unit without oil charge or attachments. For the exact weights, refer to the drawings in the gear-unit documentation.

1.1.2 Measuring-surface sound level

The measuring-surface sound level for the gear unit at a distance of 1 m can be found in the table.

The measurement is carried out to DIN 45635 parts 1 and 23 using the sound-intensity method.

The workplace of the operating personnel is defined as the area on the measuring surface at a distance of 1 metre, in whose vicinity persons may be present.

The sound level applies for the warmed-up gear unit at input speed n_1 and input power P_1 stated on the rating plate. If several figures are given, the highest speed and power values apply.

The measuring-surface sound level includes attached lubrication units (if applicable). With outgoing and ingoing pipes, the interfaces are the flanges.

If repeat measurements on site do not produce conclusive results with regard to measuring technology, the measurement achieved on the FLENDER test bench will apply.

The sound level stated in the table was obtained by statistical calculation by our Quality Control Dept. The gear unit may be expected to comply with these sound levels with statistical probability.

Measuring-surface sound level L_{pA} in dB(A)												
Type	i_N	n_1 1/min	Gear-unit size									
			5	**6**	**7**	**8**	**9**	**10**	**11**	**12**	**13**	**14**
K3..	14	1500	73	74	75	76	78	79	80	80	81	81
	.	1000	68	69	70	71	73	74	75	76	76	77
	25	750	65	66	67	68	69	70	71	72	73	74
	28	1500	71	72	73	74	75	76	77	78	79	80
	.	1000	66	67	68	69	71	72	73	73	74	75
	31.6	750	63	64	65	66	67	68	69	70	71	72
	35.5	1500	68	69	70	71	73	73	74	75	76	77
	.	1000	63	64	65	67	68	69	70	71	72	73
	63	750	60	61	62	63	64	65	66	67	68	69
K4..	20	1500	67	69	71	73	74	74	75	76	77	78
	.	1000	63	64	65	68	69	70	71	72	73	74
	100	750	60	60	62	63	64	66	68	68	69	70
	112	1500	64	66	69	70	70	72	73	74	75	76
	.	1000	60	61	63	64	65	67	68	69	69	70
	125	750	60	60	60	61	62	63	64	66	67	68
	140	1500	61	63	66	67	67	69	70	71	72	73
	.	1000	60	60	61	62	62	64	65	66	66	67
	250	750	60	60	60	60	60	61	62	63	64	65

2. General notes

2.1 Introduction

These Operating Instructions (BA) are an integral part of the gear unit supplied and must be kept in its vicinity for reference at all times.

Caution! **All persons involved in the installation, operation, maintenance and repair of the gear unit must have read and understood these Operating Instructions and must comply with them at all times. We accept no responsibility for damage or disruption caused by disregard of these Instructions.**

The **"FLENDER gear unit"** described in these Instructions has been developed specially for lifting and running gear systems in conveyor and hoisting equipment. The power data given on the rating plate are nominal data only.

The gear unit is designed only for the application described in section 1 "Technical data". Possible use in any other area must be contractually agreed.

The gear unit described in these Instructions reflects the state of technical development at the time these Instructions went to print.

In the interest of technical progress, we reserve the right to make changes to the individual assemblies and accessories which we regard as necessary to preserve their essential characteristics and improve their efficiency and safety.

2.2 Copyright

The copyright to these Operating Instructions is held by **FLENDER AG**.

These Operating Instructions must not be wholly or partly reproduced for competitive purposes, used in any unauthorised way, or made available to third parties without our agreement.

Technical enquiries should be addressed to the following plants:

A. FRIEDR. FLENDER AG
Getriebewerk Penig
Thierbacher Straße 24
D-09322 Penig

Tel.: 037381/60
Fax: 037381/80286

A. FRIEDR. FLENDER AG

D-46393 Bocholt

Tel.: 02871/92-0
Fax: 02871/92-2596

or to our customer-service addresses. A list of our customer-service addresses is given in section 11 "Spare parts, customer-service addresses".

3. Safety notes

3.1 Proper use

- The gear unit has been manufactured in accordance with the state of the art and is delivered in a condition for safe and reliable use. All changes to the gear unit on the part of the user which may affect its safety and reliability are prohibited. This applies equally to safety features designed to prevent accidental contact.
- The gear unit should be used and operated only within the context of the conditions laid down in the contract governing performance and supply.

3.2 Obligations of the user

- The user must ensure that all persons involved in the installation, operation, maintenance and repair of the gear unit have read and understood these Operating Instructions and comply with them at all times in order to:

  – avoid injury or damage,

  – ensure the safety and reliability of the unit,

  and

  – avoid disruptions and environmental damage through incorrect use.
- During transport, assembly, installation, dismantling, operation and maintenance of the unit, the relevant safety and environmental regulations must be complied with at all times.
- The gear unit should be operated, maintained or repaired by authorised, trained and qualified personnel.
- The gear unit must not be cleaned using high-pressure cleaning equipment.
- All work on the gear unit must be carried out with great care and with due regard to safety.
- All work on the gear unit must be carried out only when it is not in operation.
  The drive assembly must be secured against being switched on accidentally (e.g. by locking the key switch or removing the fuses from the power supply). A notice should be attached to the ON switch stating clearly that work is in progress.
- No welding work should be done on the gear unit. The gear unit must not be used as an earthing point for welding operations. Delicate teeth and bearings may be irreparably damaged by welding.
- If any changes are noticed during operation (e.g. overheating or unusual noises), the drive assembly must be switched off immediately.
- Rotating drive components such as couplings, gearwheels, belt drives etc. must be protected against accidental contact.
- If the gear unit is intended for installation in plant or machinery, the manufacturer of such plant or machinery must ensure that the contents of these Instructions are incorporated in his own instructions.
- Notices attached to the gear unit, e.g. rating plate, direction arrows etc. must always be observed. They must be kept free from dirt and paint at all times.
- All spare parts must be obtained from FLENDER.

3.3 Environmental protection

- When changing oil, the used oil must be collected in suitable containers. Any spillage of oil must be removed immediately.
- Conservation agent should be stored separately from used oil.
- Used oil, conservation agent, oil-binding agents and oil-soaked cloths must be disposed of in accordance with environmental legislation.

3.4 Special dangers

- Depending on operating conditions, the surface of the gear unit may heat up considerably. **Danger of burns!**
- When changing oil, take care to prevent scalding by hot oil.

3.5 Warnings and symbols used in these Instructions

⚠ This symbol indicates safety measures which must be observed to avoid **personal injury.**

Caution! This symbol indicates safety measures which must be observed to avoid **damage to the gear unit.**

Note: This symbol indicates general **operating procedures** which are of particular importance.

4. Handling and storage

Note: Observe the ”Safety notes” in section 3.

4.1 Scope of supply

The products supplied are listed in the dispatch papers. Check immediately on receipt to ensure that all the products listed have actually been delivered. Damaged or missing parts must be notified in writing immediately.

4.2 Handling

⚠ **When handling FLENDER products use only lifting and handling equipment of sufficient load-carrying capacity!**

The gear unit is delivered in the fully assembled state. Additional items (e.g. oil cooler, pipes and fittings) are delivered separately packaged.

Different forms of packaging may be used depending on the size of the unit and method of transport. Unless otherwise agreed, the packaging complies with the **HPE Packaging Guidelines**.

The symbols marked on the packaging must be observed at all times. These have the following meanings:

bild-transport

This way up | Fragile | Keep dry | Keep cool | Centre of gravity | Use no hand hook | Attach here

Caution! **The gear unit must always be transported with due care to avoid danger to persons and property. Avoid bumping the ends of shafts as this may damage the gear unit.**

Note: The gear unit must be transported using suitable equipment only. Never transport the gear unit with an oil charge.

Caution! **Use only the 2 eyes provided for attaching lifting equipment to the unit.**
Do not use the front thread at the end of the shaft for attaching ring bolts for transport purposes.

500004-12-1

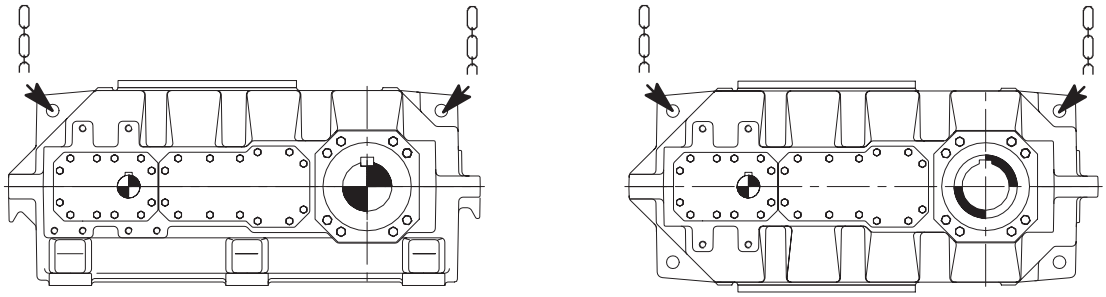

K..H **K..M**

For drive units, where additional components (e.g. motor, coupling etc.) are mounted on the gear unit, an additional attachment point may be required because of the shift in the centre of gravity.

500004-12-2

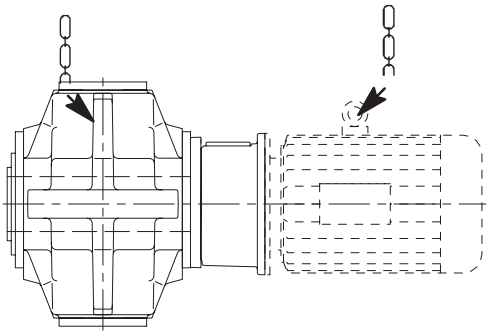

K... with motor

For a detailed illustration of the gear unit, refer to the drawings in the unit documentation.

The position of the attachment points is shown in the documentation for each specific order.

4.3 Storage

The gear unit must be stored in the position of use in a sheltered place. It must be placed on a vibration-free wooden base and covered over.

⚠ **Do not stack gear units on top of one another.**

Caution! **If the gear unit is being stored out of doors, it must be covered with particular care. It must be ensured that neither moisture nor foreign material can collect on the unit.**

Note: Provision for special environmental conditions during transport (e.g. transport by ship) and storage (climate, termites etc.) must be contractually agreed.

4.4 Standard corrosion protection

The gear unit is filled with conservation agent. The free shaft ends are painted for protection.

The outer paint coating is resistant to dilute acids, alkalis, oils and solvents. It is also resistant to sea water, tropical-climate conditions and temperatures up to 140 °C.

Note: Ensure that the paint is not damaged!
Mechanical damage (scratches), chemical damage (acids, alkalis) and thermal damage (sparks, welding beads, heat) cause corrosion which may cause failure of the exterior protective coating.

Note: Unless otherwise agreed, we grant a guarantee of 24 months on the interior corrosion protection, and 12 months on the protective coating on the free shaft ends. The guarantee period commences on the date of delivery.

For longer periods of storage (> 24 months) we advise regular checking and, if necessary, renewal of the interior corrosion protection (see section 7 ”Start-up”).

5. Technical description

Note: Observe the ”Safety notes” in section 3.

5.1 General description

The gear unit supplied is a three or four stage helical gear unit. It is designed for installation in the horizontal position. If necessary, it can also be designed for installation in a different position.

It can be operated in both directions of rotation.

A number of shaft configurations (types and rotation directions) are possible. These are shown in the following table as solid shafts:

Type	Configuration								
	A	B	C	D	E	F	G	H	I
K3SH K3VH K3HH K3HM K3KH K3KM K3DH K3DM	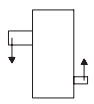	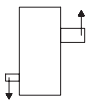	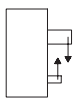	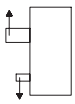	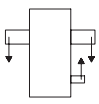	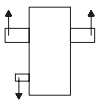	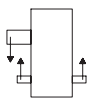	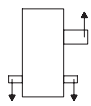	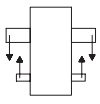
K4SH K4VH K4HH K4HM K4KH K4KM K4DH K4DM	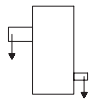	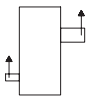	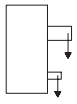	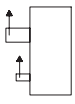	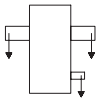	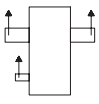	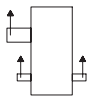	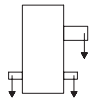	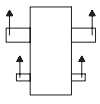

The gear units are characterised by a low noise level. This is achieved by helical gears with a high contact ratio and special sound–damping housings.

The good temperature characteristics of the gear unit are achieved by its high degree of efficiency and its large housing surface area.

Note: Unless otherwise agreed by contract, the gear units must not be exposed to harmful environmental factors such as chemical products, high-air pollution and temperatures outside the range 0 to +20 °C.

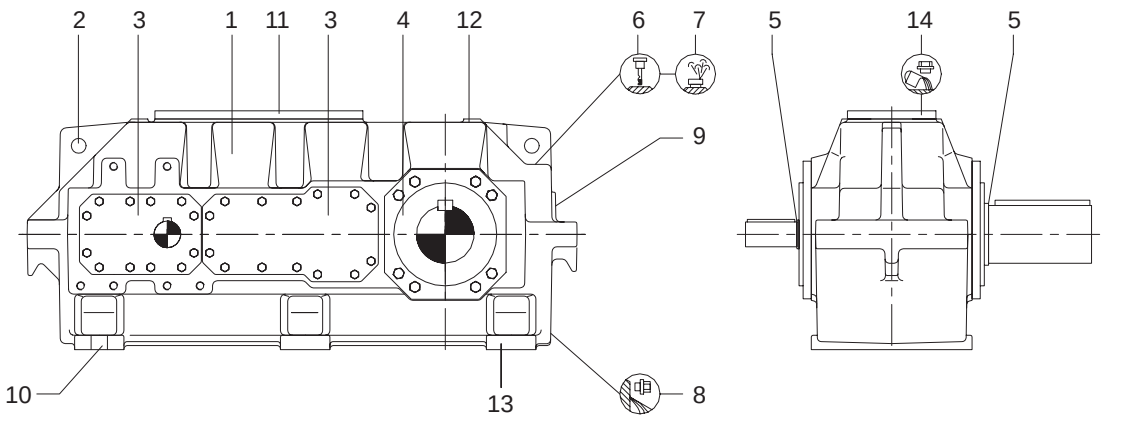

K..H

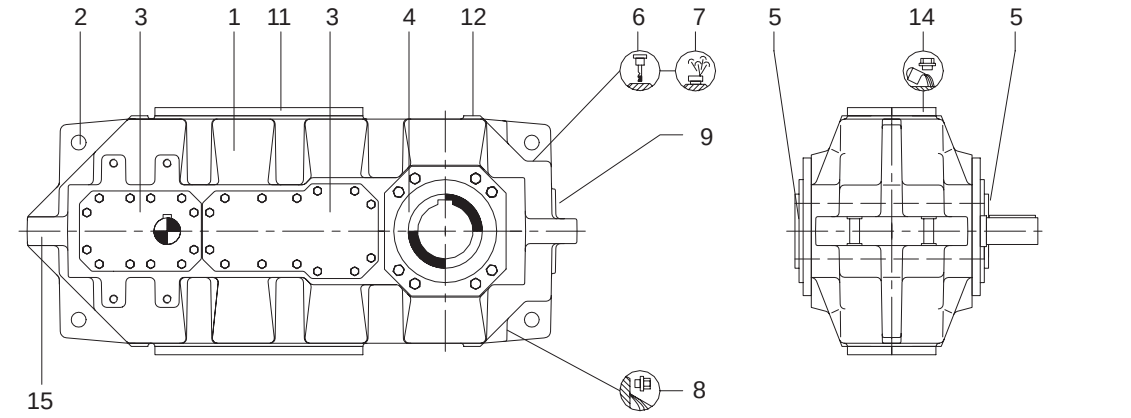

K..M

1	Housing	9	Rating plate
2	Lifting eyes	10	Gear-unit fastening
3	Cover	11	Inspection cover
4	Cover	12	Alignment surfaces
5	Shaft seals	13	Alignment thread
6	Oil dipstick	14	Oil inlet
7	Housing ventilation	15	Fastening for torque arm
8	Oil drain plug		

Output types

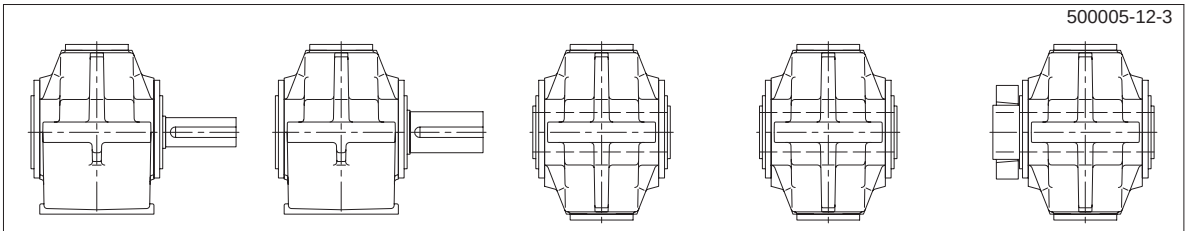

..S.	**..V.**	**..H.**	**..K.**	**..D.**
Solid shaft	Reinforced solid shaft	Hollow shaft with parallel-keyway	Hollow shaft with internal spline to DIN 5480	Hollow shaft for shrink disk

For a detailed illustration of the gear unit, refer to the drawings in the unit documentation.

5.2 Housing

The housings are of cast iron. If required, it may also be of steel.

The housing is in two parts. It is rigid in design and due to its form has excellent noise and temperature characteristics.

The housing is fitted with adequately dimensioned lifting eyes and inspection covers.

It is also fitted with a dipstick for checking the oil level, a draining screw for oil change and a venting screw.

Colour codes for venting, oil inlet, oil level and oil drainage:

Venting:	yellow	
Oil inlet:	yellow	
Oil level:	red	
Lubrication points:	red	
Oil drain:	white	

5.3 Toothed components

The toothed components of the gear unit are case hardened. Helical-gear teeth are ground. The high quality of the teeth lead to a significant noise reduction and ensure safe and reliable running.

The gear wheels are joined to the shafts by interference fitting and parallel keys. These types of joints transmit the torques generated with adequate reliability.

5.4 Lubrication

The teeth and bearings are supplied with oil with the help of the gear wheels in a splash lubrication system. This means that the gear units require very little maintenance.

5.5 Bearings

All shafts are mounted on anti-friction bearings.

5.6 Shaft seals

Depending on requirements, radial shaft sealing rings or Taconite seals are mounted at the shaft exits to prevent oil from leaking from the housing and dirt from entering it.

5.6.1 Radial shaft sealing rings

Radial shaft sealing rings are the standard type of seal. They are fitted with an additional dust lip to protect the actual sealing lip from external contamination.

500005-10-10

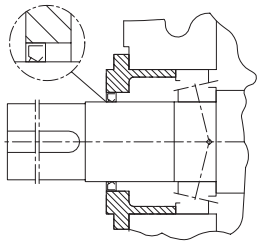

5.6.2 Taconite seals

Taconite seals were specially developed for use in a dusty environment. The penetration of dust is prevented by a combination of seal elements (radial shaft sealing ring, lamellar seal and grease-charged labyrinth seal).

500005-10-12

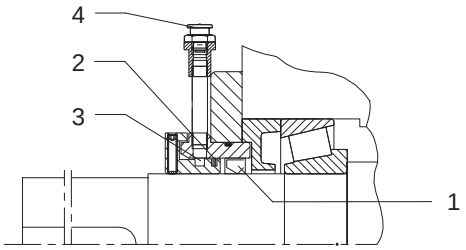

1 Radial shaft sealing ring
2 Lamellar seal
3 Grease-charged labyrinth seal (re-chargable)
4 Flat grease nipple AM10x1 to DIN 3404

Taconite seals are divided into the following types:

500005-10-13

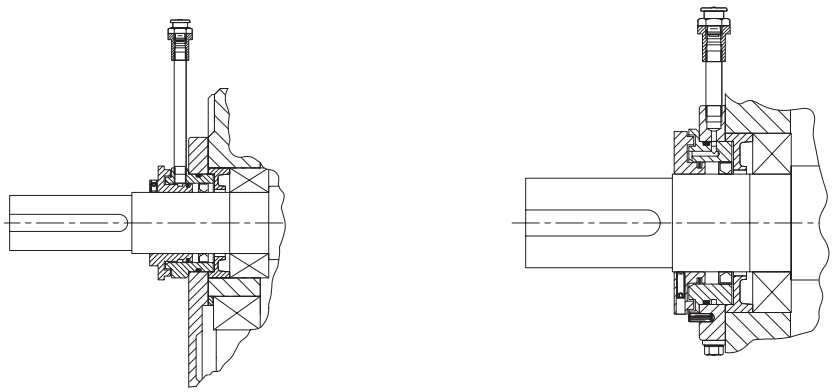

Taconite “E” **Taconite “F”**

500005-10-14

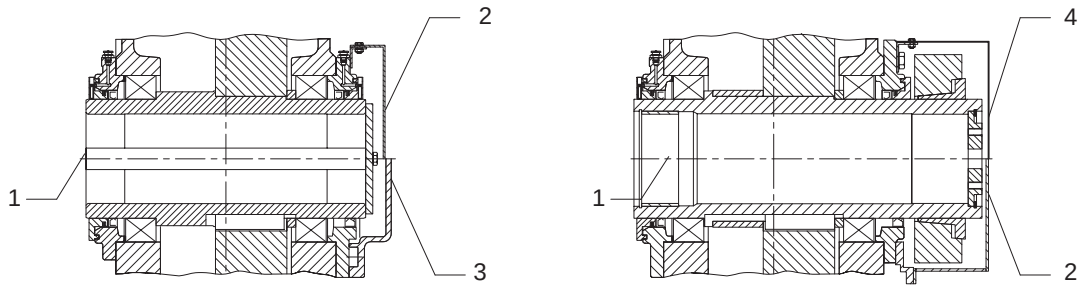

Taconite “F-F” and “F-H” **Taconite “F-K” and “F-F”**

1 Output
2 Taconite ”F-F”
3 Taconite ”F-H”
4 Taconite ”F-K”

Taconite type	Application	Remarks
“E”	All input shafts	Re-chargeable labyrinth
“F”	Output shaft Type S (solid shaft)	
“F-F”	Output shaft Type H (hollow shaft with parallel-keyway) Type K (hollow shaft with internal spline to DIN 5480) Type D (hollow shaft for shrink disk)	Labyrinth re-chargeable on both sides, incl. cowl to prevent contact on gear side facing away from output
”F-H”	Output shaft Type H (hollow shaft with parallel-keyway) Type K (hollow shaft with internal spline to DIN 5480)	Re-chargeable labyrinth on output side; dustproof cowl on opposite side
“F-K”	Output shaft Type D (hollow shaft for shrink disk)	

Note: For re-charging the labyrinth seals with grease, the specified frequency must be observed (see section 10 ”Maintenance and repair”).

5.7 Cooling

The gear unit is designed for intermittent operation. This means that, in general, an additional cooling system is not required. For alternating operating conditions, the gear unit is fitted with a separately supplied oil-supply unit. In the case of separate oil-supply units, the specific instructions for these units must be observed.

5.8 Couplings

Generally speaking, flexible couplings or hydraulic couplings combined with flexible couplings should be provided for the input drive.

For gear units fitted with solid output shafts (types ..S. and ..V.) flexible couplings are also provided in most cases.

If rigid couplings or other input or output elements are being used which give rise to additional radial or axial forces (e.g. gear wheels, belt pulleys, brake disks, rope drums), these must be agreed by contract.

Caution! **Couplings with peripheral velocities on the outer diameter of up to 30 m/s, must be statically balanced. Couplings with peripheral velocities over 30 m/s, must be dynamically balanced.**

For maintenance and operation of the couplings, refer to the specific operating instructions for the coupling.

Note: When installing the drive system, the individual components must be very precisely aligned with one another in order to minimise restoring forces caused by angle and shaft offset, and avoid premature wear to flexible coupling components.

For gear units with hollow output shaft, the coupling on the output side is not required. Gear units with hollow output shafts should be mounted on the shaft of the customer's machinery.

6. Assembly

Note: Observe the "Safety notes" in section 3.

6.1 General information on installation

Assembly and installation work must be done with great care by trained and qualified personnel. The manufacturer cannot be held liable for damage caused by incorrect assembly and installation.

During the planning phase, sufficient space should be allowed around the gear unit for subsequent care and maintenance work.

If the gear unit is fitted with a fan, there should be sufficient space for air intake.

Caution! **Exposure to direct sunlight may cause overheating. Protective features such as covers, roofing etc. should be provided as required.**

Sufficient lifting equipment should be available before beginning the installation and assembly work.

Caution! **No welding work should be done on the drive.**
The drives must not be used as an earthing point for welding operations. Delicate teeth and bearings may be irreparably damaged by welding.

Caution! **All the fastening points provided by the design of the unit should be used.**

To ensure proper lubrication, the installation position specified in the order must always be observed.

6.2 Installation of gear unit on housing base

6.2.1 Foundation

The foundation must be horizontal and level.

It should be designed in such a way that no resonance vibrations are created and that no vibrations are transmitted from adjacent foundations. The structure on which the unit is to be mounted, must be rigid. It must be designed according to the weight and torque, taking into account the forces acting on the gear unit.

The unit must be carefully aligned with the motor on the input and output sides. Possible strain deformations due to operating forces must be taken into account.

Hexagon bolts and nuts should be tensioned to the specified torque. For the correct torque, refer to point 10.2.7. We recommend bolts of strength class 8.8.

When external forces are applied to the gear unit, it is advisable to use lateral stops to prevent it from shifting.

Note: For dimensions, space requirement, arrangement of supply connections (e.g. with separate oil-cooling units), refer to the drawings in the gear-unit documentation.

6.2.2 Description of installation work

- Remove the anti-corrosion paint on the shafts with benzine.

Caution! **Do not allow the benzine to contact the shaft sealing rings.**

⚠ **Ensure adequate ventilation. Do not smoke when working with benzine! Explosion hazard!**

- Mount and secure input and output drive elements (e.g. coupling components) on shafts. These should be heated before mounting. For the correct joining temperatures, refer to the dimensional drawings in the coupling documentation.

Unless otherwise instructed, the components may be heated inductively, with a burner or in a furnace.

⚠ **Take precautions to avoid burns from hot components!**

Caution! **Protect shaft sealing rings from damage and heating over +100 °C. Use heat-protection screens to reduce radiant heat.**

Caution! **The coupling components should be fitted using suitable equipment to avoid possible damage to the shaft bearings through axial joining forces.**
Always use suitable lifting equipment.
When fitting the components, ensure that the shaft sealing rings and running surface are not damaged.

The components should be pushed smartly onto the shaft, up to the position specified in the order specific dimensional drawing.

Caution! **Fit the coupling using suitable fitting equipment. Never use force or knock the couplings into position, as this will cause irreparable damage to the gearwheels, anti-friction bearings, retaining rings etc.**

Note: Gear units whose weight requires the use of lifting gear must be attached at the points shown in section 4 ”Handling and storage”. When additional components are mounted on the gear unit, appropriate attachment points should be provided in accordance with the order-specific dimensional drawing.

6.2.2.1 Aligning surfaces, aligning thread

For preliminary alignment of the gear unit in the horizontal direction, use the machined surfaces on the top of the housing.

To assist in aligning, gear units of sizes 13 to 14 are fitted with additional alignment threads in the housing base.

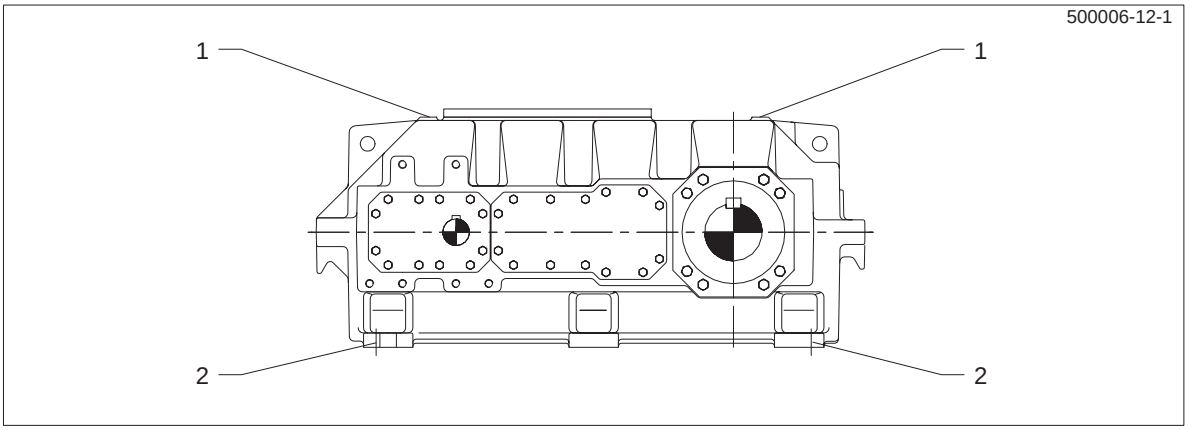

1 Alignment surfaces

2 Alignment thread

The final fine alignment with the assemblies on the output side must be carried out accurately to the shaft axes using:

- rulers
- spirit level
- dial gauge
- feeler gauge etc.

The gear unit can now be fixed in its position.

Note: The accuracy of the alignment process is an important factor in determining the life span of shafts, bearings and couplings. If possible, the deviation should be zero. For the special requirements for the couplings, refer to the specific operating instructions.

6.2.2.2 Mounting on a foundation frame

- Clean the lower surfaces of the gear-unit base.
- With suitable lifting gear, place the gear unit on the foundation frame.
- Tighten the foundation bolts to the specified torque (see point 10.2.7). If necessary use stops to prevent shifting.

Caution! **The gear unit must not be twisted when tensioning the fastening bolts.**

6.3 Assembly of a shaft-mounting gear unit with hollow shaft and parallel-keyway

6.3.1 Assembly

- Remove the anti-corrosion paint from the hollow shaft and machine shaft with benzine.

Caution! **Do not allow the benzine to contact the shaft sealing rings.**

⚠ **Ensure adequate ventilation. Do not smoke when working with benzine! Danger of explosion.**

- Check the hollow and machine shafts to ensure that seat and edges are not damaged. If necessary, rework the parts with a suitable tool and clean them again.

Coat with a suitable lubricant (e.g. Calypsol grease type H 443 HD88) to prevent frictional corrosion of the contact surfaces.

6.3.1.1 Fitting

- Fit the gear unit by means of nut and threaded spindle. The counter force is provided by the hollow shaft.

Caution! **The hollow shaft must be exactly aligned with the machine shaft to avoid canting.**

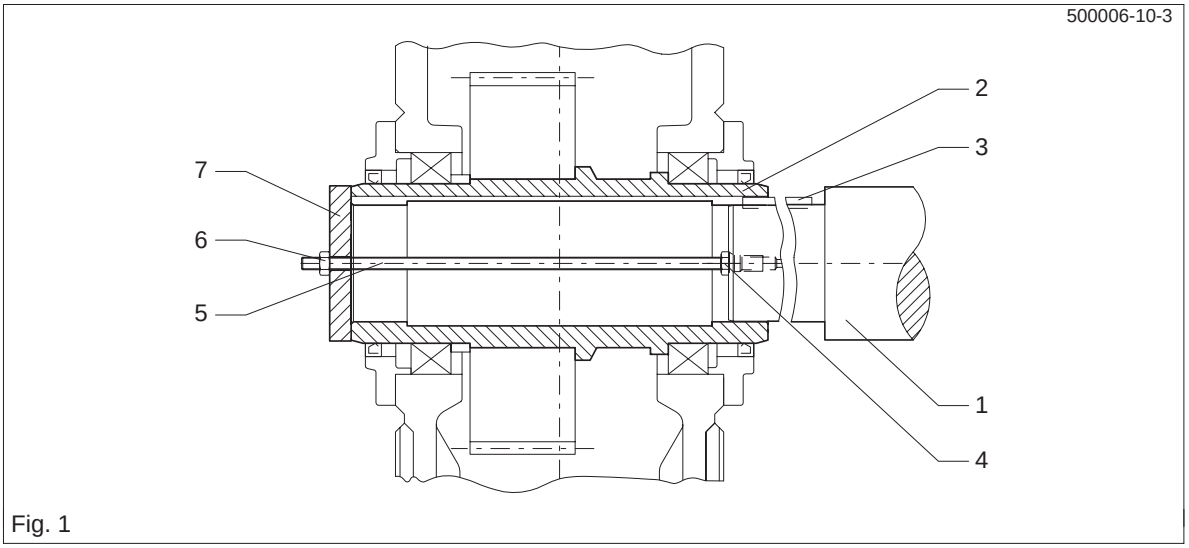

Fig. 1

1	Machine shaft	4	Nut	7	End plate
2	Hollow shaft	5	Threaded spindle		
3	Parallel key	6	Nut		

Instead of the nut and threaded spindle shown in the diagram, other types of equipment such as a hydraulic lifting equipment (type Lucas) may be used.

6.3.1.2 Axial securing device

Depending on type, secure the hollow shaft axially on the machine shaft (e.g. with circlip, end plate, set screw etc.).

6.3.2 Dismantling

- Remove the axial securing device from the hollow shaft.
- If frictional corrosion has formed on the seating surfaces, press rust-releasing or other agent (e.g. with a pump) into the bore cavity to reach the seats. The rust releaser is forced in through the bores in the machine shaft (see fig. 2) or end plate (fig. 3).
- Depending on the facilities available, the gear unit can be forced off the shaft on site using forcing screws in an end plate (see fig. 3), a central threaded spindle or a Lucas hydraulic lifting unit.
- When the rust-releasing agent has taken effect, pull the gear unit off with the device as shown in figs. 2 or 3.

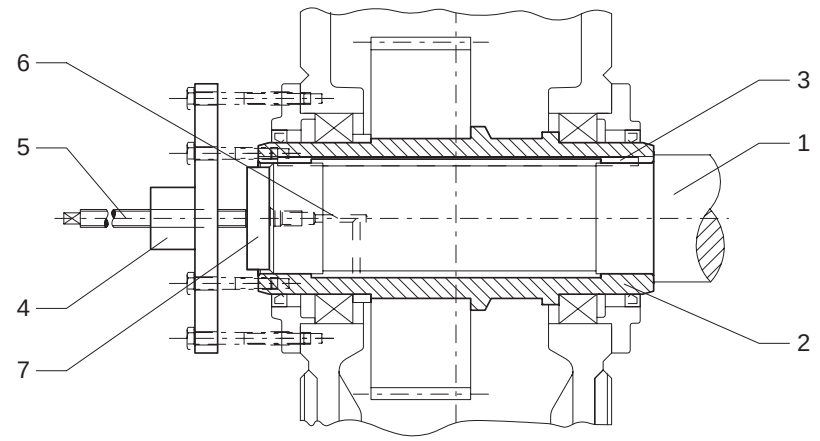

Fig. 2

1 Machine shaft
2 Hollow shaft
3 Parallel key
4 Hydraulic lifting unit
5 Threaded spindle
6 Bore for rust-releasing agent
7 Plate for forcing out

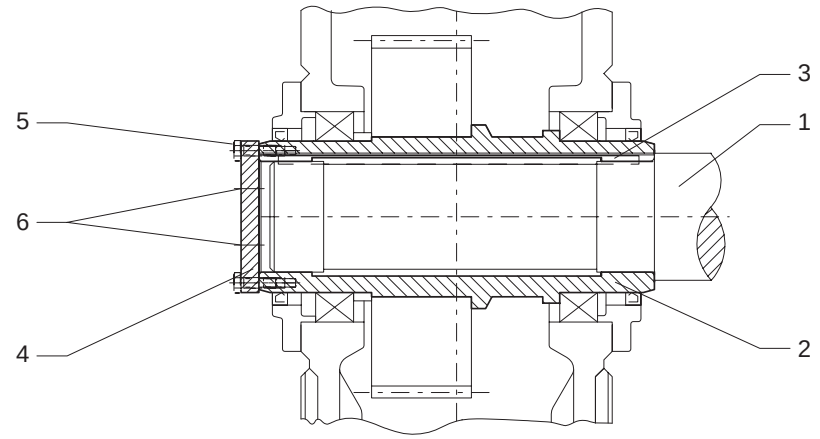

Fig. 3

1 Machine shaft
2 Hollow shaft
3 Parallel key
4 End plate
5 Seal
6 Bore for rust-releasing agent

Caution! **Avoid twisting or canting when pulling the unit off.**

Caution! **If the counter force is provided not only by the hollow shaft, but by the housing also, as shown in fig. 2, the forces used must not exceed the values given in the following table.**

Gear-unit size	Maximum force N	Gear-unit size	Maximum force N
5	33000	10	82000
6	37500	11	97200
7	50000	12	113600
8	56000	13	140000
9	65000	14	160000

Table 6.1: Maximum press-off forces

Caution! **If the above figures are exceeded, the hollow-shaft bearings or other gear components may be irreparably damaged. Before replacing the gear unit on the machine shaft, always check the bearings for any signs of damage.**

Note: When using forcing screws or threaded spindles, the head of the thread pushing against the working machine should be rounded and well greased to reduce the risk of seizing at this point.

6.4 Shaft-mounting gear unit with hollow shaft and internal spline to DIN 5480

6.4.1 Assembly

- Remove the anti-corrosion paint from the hollow shaft and machine shaft with benzine.

Caution! **Do not allow the benzine to contact the shaft sealing rings.**

⚠ **Ensure adequate ventilation. Do not smoke when working with benzine! Danger of explosion.**

- Check the hollow and machine shafts to ensure that seats, teeth or edges are not damaged. If necessary, rework the parts with a suitable tool and clean them again.

Coat with a suitable lubricant (e.g. Calypsol grease type H 443 HD88) to prevent frictional corrosion of the contact surfaces.

6.4.1.1 Fitting

- Fitting with integrated DU bush
- Fit the gear unit by means of nut and threaded spindle. The counter force is provided by the hollow shaft.

Caution! **The hollow shaft must be exactly aligned with the machine shaft to avoid canting. When fitting, ensure that the position of the teeth between the machine shaft and hollow shaft is correct. The correct position can be determined by turning the input shaft or by swivelling the gear unit lightly around the hollow shaft.**

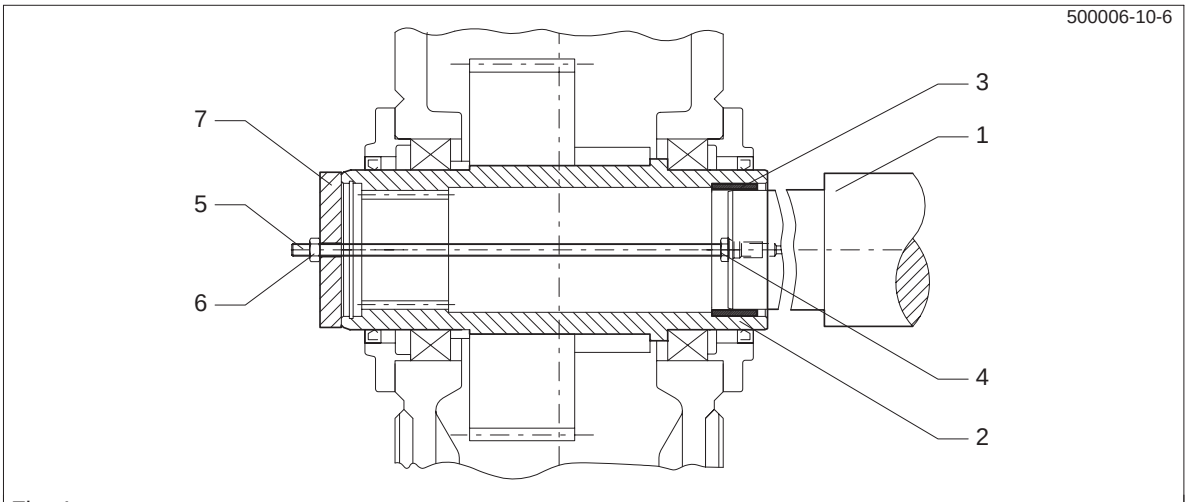

Fig. 4

1	Machine shaft	4	Nut	7	End plate
2	Hollow shaft	5	Threaded spindle		
3	DU bush	6	Nut		

- Fitting with loose DU bush

The loose DU bush is pushed onto the machine shaft, fixed rigidly in position with a locating tie and then pulled into the hollow shaft along with the machine shaft (see fig. 4).

Caution! **The hollow shaft must be exactly aligned with the machine shaft to avoid canting. When fitting, ensure that the position of the teeth between the machine shaft and hollow shaft is correct. The correct position can be determined by turning the input shaft or by swivelling the gear unit lightly around the hollow shaft.**

Instead of the nut and threaded spindle shown in the diagram, other types of equipment such as a hydraulic lifting equipment (type Lucas) may be used.

6.4.1.2 Axial securing device

Depending on type, secure the hollow shaft axially on the machine shaft (e.g. with circlip, end plate, set screw etc.).

6.4.2 Dismantling

- Remove the axial securing device from the hollow shaft.
- If frictional corrosion has formed on the seating surfaces, press rust-releasing or other agent (e.g. with a pump) into the bore cavity to reach the seats. The rust releaser is forced in through the bores in the machine shaft (see fig. 5) or end plate (fig. 6).
- Depending on the facilities available, the gear unit can be forced off the shaft on site using forcing screws in an end plate (see fig. 6), a central threaded spindle or a Lucas hydraulic lifting unit.
- When the rust-releasing agent has taken effect, pull the gear unit off with the device as shown in figs. 5 or 6.

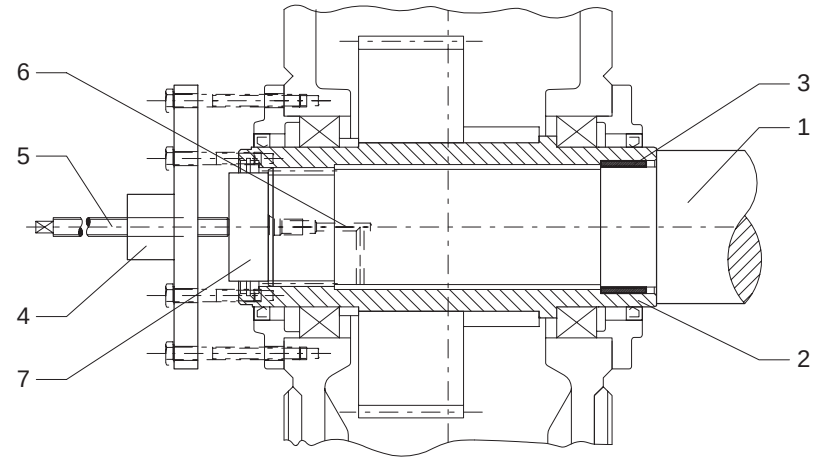

Fig. 5

1 Machine shaft
2 Hollow shaft
3 DU bush
4 Hydraulic lifting unit
5 Threaded spindle
6 Bore for rust-releasing agent
7 Plate for forcing out

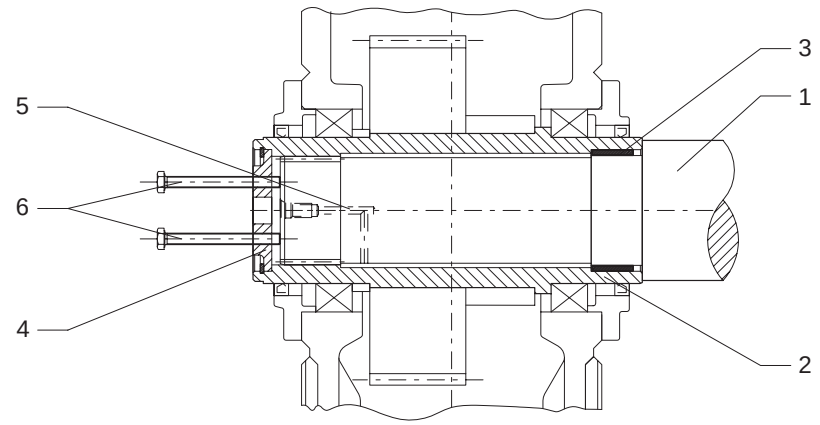

Fig. 6

1 Machine shaft
2 Hollow shaft
3 DU bush
4 End plate
5 Bore for rust-releasing agent
6 Forcing screws

Caution! **Avoid twisting or canting when pulling the unit off.**

Caution! **If the counter force is provided not only by the hollow shaft, but by the housing also, as shown in fig. 5, the forces used must not exceed the values given in the following table.**

Gear-unit size	Maximum force N	Gear-unit size	Maximum force N
5	33000	10	82000
6	37500	11	97200
7	50000	12	113600
8	56000	13	140000
9	65000	14	160000

Table 6.2: Maximum press-off forces

Caution! **If the above figures are exceeded, the hollow-shaft bearings or other gear components may be irreparably damaged. Before replacing the gear unit on the machine shaft, always check the bearings for any signs of damage.**

Note: When using forcing screws or threaded spindles, the head of the thread pushing against the working machine should be rounded and well greased to reduce the risk of seizing at this point.

6.5 Shaft-mounting gear unit with hollow shaft and shrink disk

6.5.1 Assembly

- Remove the anti-corrosion paint from the hollow shaft and machine shaft with benzine.

Caution! **Do not allow the benzine to contact the shaft sealing rings.**

⚠ **Ensure adequate ventilation. Do not smoke when working with benzine! Danger of explosion.**

- Check the hollow and machine shafts to ensure that seat and edges are not damaged. If necessary, rework the parts with a suitable tool and clean them again.

Caution! **The bore of the hollow shaft and the machine shaft must be absolutely free of grease in the area of the shrink-disk seat.**
This is essential for safe and reliable torque transmission.
Do not use contaminated solvents or dirty cloths for removing grease.

6.5.1.1 Fitting

- Fitting with integrated DU bush
- Fit the gear unit by means of nut and threaded spindle. The counter force is provided by the hollow shaft.

Caution! **The hollow shaft must be exactly aligned with the machine shaft to avoid canting.**

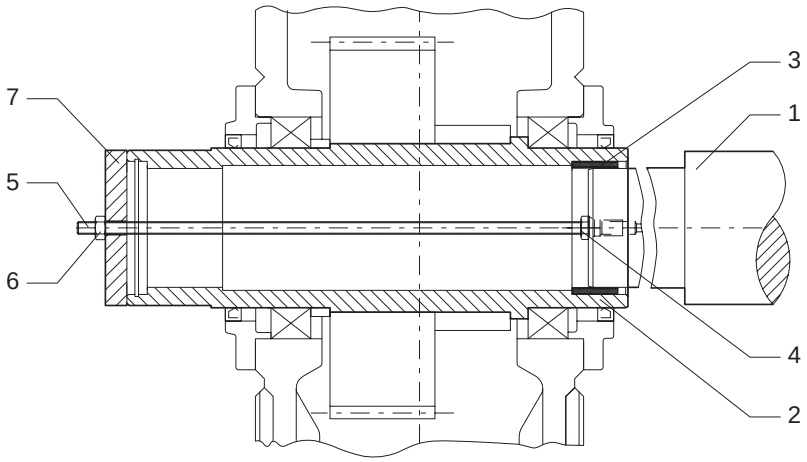

Fig. 7

1	Machine shaft	4	Nut	7	End plate
2	Hollow shaft	5	Threaded spindle		
3	DU bush	6	Nut		

- Fitting with loose DU bush

The loose DU bush is pushed onto the machine shaft, fixed rigidly in position with a locating tie and then pulled into the hollow shaft along with the machine shaft (see fig. 7).

Caution! **The hollow shaft must be exactly aligned with the machine shaft to avoid canting.**

Instead of the nut and threaded spindle shown in the diagram, other types of equipment such as a hydraulic lifting equipment (type Lucas) may be used.

6.5.1.2 Axial securing device

If the shrink disk is fitted according to instructions, the gear unit is fixed securely in the axial direction. Additional securing is not required.

6.5.2 Shrink disk type HSD

6.5.2.1 Assembly of shrink disk

The shrink disk is delivered ready for installation.

Caution! **It must not be dismantled before tensioning for the first time.**

Caution! **The bore of the hollow shaft and the machine shaft must be absolutely free of grease in the area of the shrink-disk seat.**
This is essential for safe and reliable torque transmission.
Do not use contaminated solvents or dirty cloths for removing grease.

Fig.-schrumpf-1

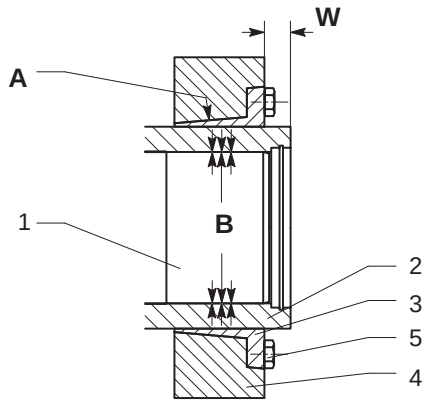

A Greased **B** Absolutely grease-free **W** Installation height

1	Machine shaft	3	Inner ring	5	Tensioning bolt
2	Hollow shaft	4	Outer ring		

For the exact installation height (W) of the shrink disk, refer to the dimensional drawing (see section 1 ”Technical data”)

Note: The outer surface of the hollow shaft may be greased in the area of the shrink-disk seat.

Caution! **Do not tighten the tensioning bolts until the machine shaft is installed.**

Tighten all the tensioning bolts gradually one after the other, working round several times.

Caution! **Do not tighten diametrically opposite bolts one after the other.**

Tighten the tensioning bolts until the front surfaces of the inner and outer rings are aligned.

Note: This allows the tension state to be checked visually.

Caution! **To avoid overloading the individual bolts, the maximum tensioning torque (see table) must never be exceeded. The alignment of the front surfaces has priority. If they cannot be aligned by tightening, consult the manufacturer.**

Tensioning-bolt thread	Max. tensioning torque per bolt (with μ = 0.1)	
	Strength class 10.9 Nm	Strength class 12.9 Nm
M 12	100	121
M 14	160	193
M 16	240	295
M 20	470	570

Table 6.3: Maximum torques for tensioning bolts

Replace the protective cowl.

6.5.2.2 Removing the shrink disk

The loosening process is similar to that of tightening.

Loosen the tensioning bolts gradually one after the other, working round several times.

If the outer ring does not release from the inner ring, several tensioning bolts can be removed and then screwed into adjacent forcing threads.

The rings can then be released without difficulty.

Pull the shrink disk off the hollow shaft.

6.5.2.3 Cleaning and greasing the shrink disk

Shrink disks do not have to be dismantled and re-greased before being re-installed.

The shrink disk should only be dismantled and cleaned if it is dirty.

Caution! **Following cleaning, only the inner sliding surfaces of the shrink disk should be re-greased.**

Use a solid grease with a coefficient of friction of μ = 0.04 as shown in the following table.

Grease	Form	Manufacturer
Molykote 321 R (lubricating paint)	Spray	DOW Corning
Molykote Spray (powder spray)	Spray	DOW Corning
Molykote G Rapid	Spray or Paste	DOW Corning
Aemasol MO 19 P	Spray or Paste	A. C. Matthes
Molykombin UMFT 1	Spray	Klüber Lubrication
Unimoly P 5	Powder	Klüber Lubrication

Table 6.4: Lubricants for shrink disk after cleaning

6.5.3 Dismantling

- If frictional corrosion has formed on the seating surfaces, press rust-releasing or other agent (e.g. with a pump) into the bore cavity to reach the seats. The rust releaser is forced in through the bores in the machine shaft (see fig. 8) or end plate (fig. 9).
- Depending on the facilities available, the gear unit can be forced off the shaft on site using forcing screws in an end plate (see fig. 9), a central threaded spindle or a Lucas hydraulic lifting unit.
- When the rust-releasing agent has taken effect, pull the gear unit off with the device as shown in figs. 8 or 9.

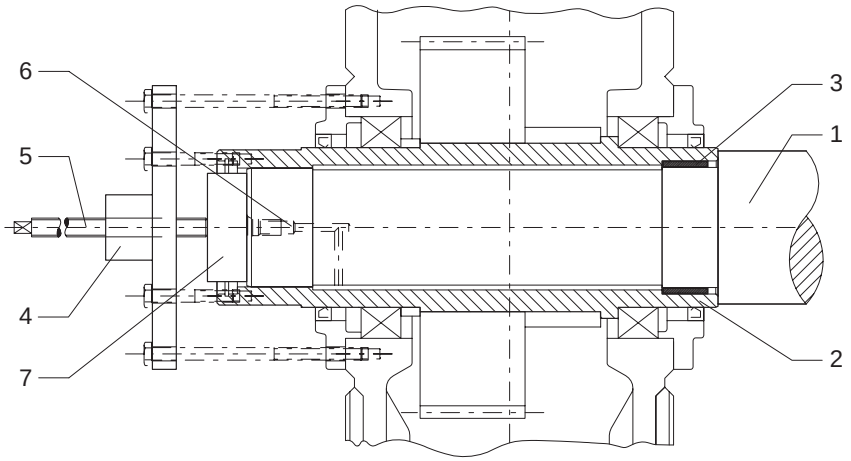

Fig. 8

1 Machine shaft
2 Hollow shaft
3 DU bush
4 Hydraulic lifting unit
5 Threaded spindle
6 Bore for rust-releasing agent
7 Plate for forcing out

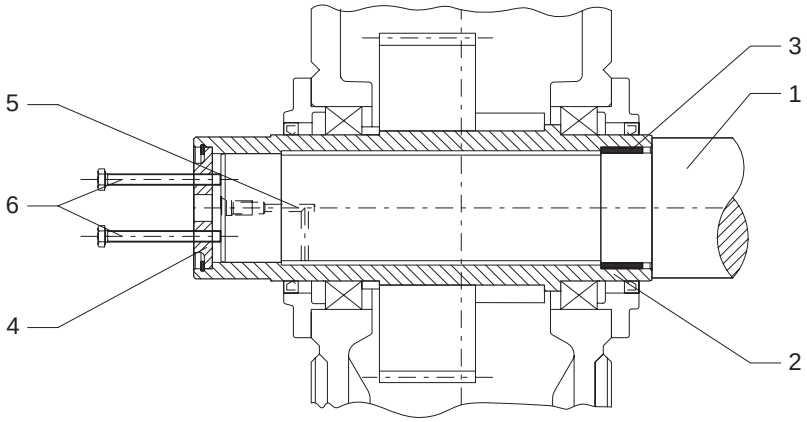

Fig. 9

1 Machine shaft
2 Hollow shaft
3 DU bush
4 End plate
5 Bore for rust-releasing agent
6 Forcing screws

Caution! **Avoid twisting or canting when pulling the unit off.**

Caution! **If the counter force is provided not only by the hollow shaft, but by the housing also, as shown in fig. 8, the forces used must not exceed the values given in the following table.**

Gear-unit size	Maximum force N	Gear-unit size	Maximum force N
5	33000	10	82000
6	37500	11	97200
7	50000	12	113600
8	56000	13	140000
9	65000	14	160000

Table 6.5: Maximum press-off forces

Caution! **If the above figures are exceeded, the hollow-shaft bearings or other gear components may be irreparably damaged. Before replacing the gear unit on the machine shaft, always check the bearings for any signs of damage.**

Note: When using forcing screws or threaded spindles, the head of the thread pushing against the working machine should be rounded and well greased to reduce the risk of seizing at this point.

6.6 Mounting the torque arm for gear housing

6.6.1 Attaching the torque arm

With types K..M, there are 2 holes on the input side of the housing for mounting the torque arm.

Caution! **The torque arm must be mounted stress-free on the machine side.**

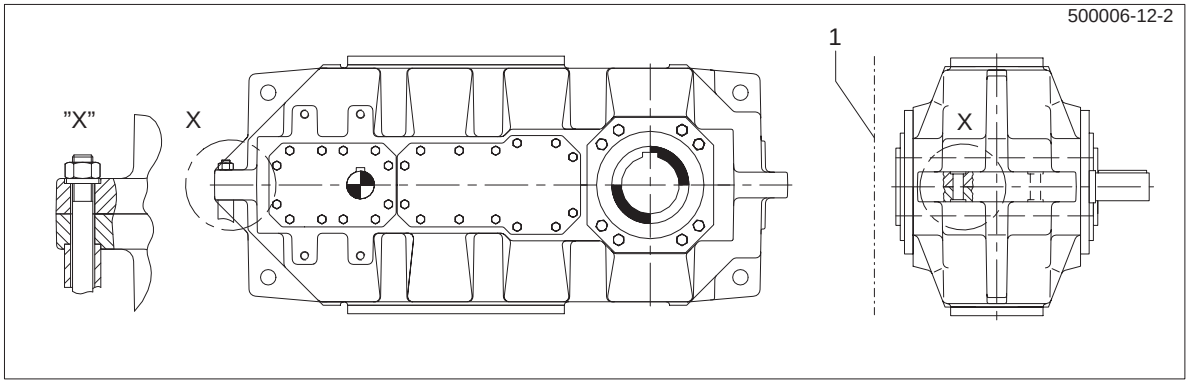

1 Machine side

Caution! **In the case of separately mounted gear units, it must be ensured that the gear unit is not subjected to external forces through possible displacement.**

The torque arm should be designed for the righting moment and the weight forces involved.

Note: It is not included in our delivery.

- Foundation type for fastening torque arm, see point 6.2.1 "Foundation".

7. Start-up

Note: Observe the ”Safety notes” in section 3.

7.1 Procedure before start-up

7.1.1 Removal of conservation agent

Unscrew oil drain plug and drain the conservation agent or running-in oil residues from the housing into a suitable container and dispose of in accordance with regulations, making sure also to open residual oil drain plugs, if any. The location of the oil draining point is marked by the symbol in the dimensional drawing in the unit documentation.

⚠ **Remove any oil spillage immediately with an oil-binding agent.**

- Replace the oil drain plug

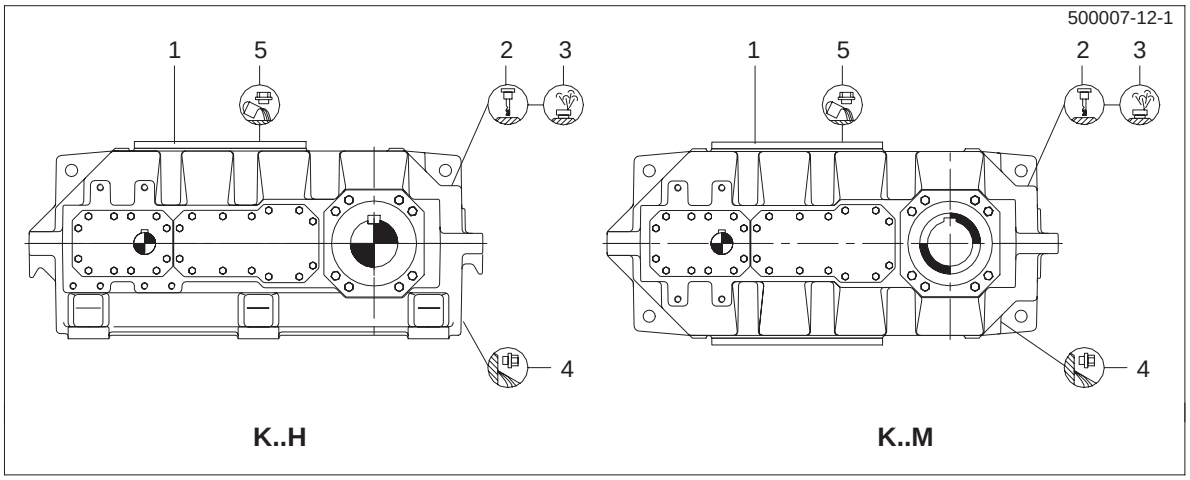

1	Inspection cover	3	Venting or plug screw	4	Oil drain plug
2	Oil dipstick			5	Oil inlet

For a detailed illustration of the gear unit, refer to the drawings in the unit documentation.

Caution! **Before start-up, replace the yellow plastic plug with venting screws with cap (see notice on gear unit).**

7.1.2 Charging with lubricant

- Release the fastening bolts on the inspection cover and remove the cover (including seal) from the housing. Do not discard the seal.

Caution! **Fill the gear unit with fresh oil using a filter (max. mesh 25 µm).**

Note: For the correct type of oil (of various brands) to be used refer to the operating instructions BA 7300 EN supplied separately.
Information on the type, viscosity and quantity of the oil is given on the rating plate on the gear unit.
The quantity of oil stated on the rating plate is an approximation only. The markings on the oil dipstick must **always** be observed.

- Check the oil level in the gear housing with the oil dipstick

Note: The oil level must be at the upper mark on the oil dipstick.

⚠ **Remove any oil spillage immediately with an oil-binding agent.**

- Place the inspection cover (including seal) on the housing and replace and tighten the fastening bolts (see point 10.2.7).

7.1.2.1 Oil quantities

Type	Oil quantity (approx.) in litres for size									
	5	**6**	**7**	**8**	**9**	**10**	**11**	**12**	**13**	**14**
K3SH, K3VH, K3HH ,K3KH, K3DH	20	24	32	40	50	60	85	115	135	170
K3HM, K3KM, K3DM	18	22	28	36	45	55	75	105	120	155
K4SH, K4VH, K4HH ,K4KH, K4DH	20	24	32	40	50	60	85	115	135	170
K4HM, K4KM, K4DM	18	22	28	36	45	55	75	105	120	155

Table 7.1: Approximate figures for required oil quantities in horizontal gear units

7.2 Start-up

- Check the oil level in the housing with the oil dipstick

Note: When the oil is cool, the level should be at the upper oil dipstick mark. When the oil is warm it may slightly exceed this mark. It must not be allowed to fall below the mark. If necessary, top up to the correct level.

7.3 Removal from service

- To take the gear unit out of service, first switch off the drive assembly.

⚠ **Secure the drive assembly to prevent it from being started up accidentally. Attach a warning notice to the start switch.**

- During longer periods of disuse, start the unit up briefly at intervals of approx. 3 weeks. If it is to remain out of service for longer than six months, fill it with conservation agent (see point 7.3.1).

7.3.1 Interior conservation during longer disuse

Depending on the type of lubrication or shaft sealing, the following types of internal corrosion protection can be used.

7.3.1.1 Interior conservation with gear oil

Gear units with splash-lubrication systems and contacting shaft seals can be filled with the correct type of service oil up to a point just below the venting screw.

7.3.1.2 Interior conservation with special conservation agent

Before longer periods of storage, gear units with non-contacting shaft seals should be allowed to idle with a charge of conservation agent.

Duration of protection	Conservation agent	Special measures
less than **24** months	Castrol Alpha SP 220 S	Close gear unit, replace venting screw or air filter with a yellow plug screw, (replace the original parts before start-up)
For storage periods longer than 24 months, renew the conservation agent. For storage periods over 36 months, FLENDER should be consulted.		

Table 7.2: Conservation procedure when using mineral oil or PAO-based synthetic oil

Duration of protection	Conservation agent	Special measures
less than **36** months	Special anti-corrosion oil TRIBOL 1390 1)	Close gear unit, replace venting screw or air filter with a yellow plug screw, (replace the original parts before start-up)
For storage periods over 36 months, FLENDER should be consulted.		

Table 7.3: Conservation procedure when using PG-based synthetic oil

1) Resistant to tropical conditions and sea water. Max. ambient temperature 50 °C

7.3.1.3 Interior conservation procedure

- Switch the gear unit off and drain the oil as described in section 10 ”Maintenance and repair”.
- Pour in the conservation agent given in Table 7.2 or 7.3 through the venting hole or the opening in the inspection cover until it reaches the top mark on the oil dipstick.
- Close the venting hole or the opening in the inspection cover.
- Start the gear unit and allow it to idle for a short time.
- Unscrew the oil drain plug and allow the conservation agent to drain into a suitable container and dispose of it according to regulation.

⚠ **The conservation agent emerging from the gear unit may be hot.**
Wear gloves to avoid scalding.

- Replace the oil drain plug.

Caution! **Before re-starting the gear unit, replace the plug screw with the venting screw or air filter.**
See also point 7.1.1

7.3.2 Exterior conservation

Duration of protection	Conservation agent	Layer thickness	Remarks
less than **12** months	Tectyl 846 K19	approx. 50 µm	Long-term wax-based conservation agent, resistant to sea water and tropical conditions, soluble in benzine

Table 7.4: Exterior protection of shaft ends and other bare surfaces

7.3.2.1 Exterior conservation procedure

- Clean the surfaces
- Apply grease to shaft-sealing rings to protect the sealing lips from conservation agent
- Apply conservation agent

8. Operation

Note: Observe the ”Safety notes” in section 3.

8.1 General operating data

During operation, the unit must be monitored for:

- overheating (In continuous operation, the gear unit is designed for a temperature of 90 °C with mineral oil. For higher temperatures, synthetic oils must be used. The maximum short-term operating temperature is 100 °C. See also section 10.)
- changes in running noise
- possible oil leakage at the housing and shaft seals

and

- correct oil level (see section 7 ”Start-up”)

Note: To check the oil level, stop operation of gear unit.
When the oil is warm it may slightly exceed the top mark of the oil dipstick. It must not be allowed to fall below the lower mark. If necessary, top up to the correct level.

Caution! **If any irregularities are noticed during operation, switch the drive assembly off at once. Determine the cause of the fault using the table in section 9.**
This table contains a list of possible faults, their causes and suggested remedies.
Should it not be possible to identify the cause, or the unit cannot be repaired with the facilities available, you are advised to contact one of our customer-service offices for specialist assistance. See section 11.

9. Disturbances, reasons and remedy

Note: Observe the ”Safety notes” in section 3.

9.1 General information on faults and malfunctions

Note: Faults and malfunctions occurring during the guarantee period and which require repair work on the gear unit, must be carried out only by FLENDER Customer Service. In the case of faults and malfunctions occurring after the guarantee period, and whose cause cannot be precisely identified, we advise our customers to contact our Customer Service.

Caution! **FLENDER will not be bound by the terms of the guarantee or otherwise be responsible in cases of improper use of the gear unit, modifications carried out without the consent of FLENDER, or use of spare parts not supplied by FLENDER.**

⚠ **To remedy faults and malfunctions, the gear unit must always be taken out of service.**
Secure the drive assembly to prevent it from being started up accidentally. Attach a warning notice to the start switch.

9.2 Possible faults

Malfunctions	Causes	Remedy
Changes in gear noise	Damage to gear teeth	Contact Customer Service. Check teeth on all components, replace any damaged parts.
	Excessive bearing play	Contact Customer Service. Adjust bearing play.
	Defective bearing	Contact Customer Service. Replace defective bearing.
Loud noises in area of gear-unit fastening	Fastening has worked loose	Tighten bolts / nuts to prescribed torque. Replace damaged bolts / nuts.
Increased temperature at bearing points	Oil level in housing too low	Check oil level at room temperature, top up if necessary
	Oil too old	Check date of last oil change, change oil if necessary. See section 10.
	Bearing defective	Contact Customer Service. Check bearings and replace if necessary
Gear unit is oily	Inadequate sealing of housing cover or joints	Seal joints
Oil leakage from gear unit	Inadequate sealing of housing cover or joints	Check seals, replace if necessary, seal joints
	Radial shaft sealing rings defective	Check radial shaft sealing rings, replace if necessary
Water in oil	Oil froths in sump	Check oil state using test-tube method for water contamination. Have oil analysed by laboratory.
	Gear unit exposed to cold air from machine-room ventilator causing condensation	Protect gear unit with suitable insulation. Close air outlet or alter its direction.
Operating temperature too high	Oil level in housing too high	Check oil level and adjust if necessary
	Oil too old	Check date of last oil change, change oil if necessary. See section 10.
	Oil contaminated	Change oil. See section 10.
Fault in oil-supply unit		Consult operating instructions for oil-supply unit

Table 9.1: Faults, causes and remedies

10. Maintenance and repair

Note: Observe the ”Safety notes” in section 3.

10.1 General notes on maintenance

Note: Maintenance and repair work should be done with great care by trained and qualified personnel only.

Caution! **The periods stated in table 10.1 depend on the conditions under which the gear unit is operated. For this reason only average figures can be given which refer to:**

a daily operating time of	**24 hours,**
a duty factor of	**100%,**
an input-drive speed of	**1500 1/min,**
and a maximum oil temperature of	**90 °C** (mineral oil only) **100 °C** (synthetic oil only)

Note: Under different conditions, the frequencies stated below should be adjusted accordingly.

Measures	Periods	Remarks
Check oil temperature	Daily	
Check for unusual gear unit noise	Daily	
Check oil level	Monthly	
Check gear unit for leaks	Monthly	
Test oil for water content	After 400 service hours, once per year at least	See point 10.2.1
First oil change after start-up	After 400 service hours	See point 10.2.2
Subsequent oil changes	Every 18 months or 5000 service hours 1)	See point 10.2.2
Clean venting screw	Every 3 months	See point 10.2.3
Re-grease Taconite seals	Every 3000 service hours, every 6 months at least	See point 10.2.4
Clean gear unit housing	Simultaneously with oil change	See point 10.2.5
Check tightness of fastening bolts	After first oil change, thereafter every second oil change	See point 10.2.7
Complete inspection of gear unit	Approx. every 2 years along with oil change	See point 10.2.8

Table 10.1: Maintenance and repair work

1) when using synthetic oils the periods can be tripled.

10.2 Description of maintenance and repair work

10.2.1 Test water-content of oil

For detailed information on testing the water-content of oil, apply to the lubricant manufacturer.

10.2.2 Changing the oil

Caution! **When changing the oil, always re-charge the gear unit with the same type of oil. Never mix different types of oil or oils made by different manufacturers. Never mix synthetic oils with mineral-based oils or with other synthetic oils. When changing from mineral-based oil to synthetic oil or from one type of synthetic oil to another, flush the gear unit well with the new type of oil beforehand.**

When changing the oil, the housing must be flushed with oil to remove sludge, metallic particles and oil residue. Use the same type of oil as is used for normal operation. High-viscosity oils should be heated beforehand. Ensure that all residues have been removed before filling with fresh oil.

Note: Drain the oil while it is still warm, i.e. immediately after switching the machinery off.

- Stop the gear unit by switching off the drive assembly

⚠ **Secure the drive assembly to prevent it from being started up accidentally. Attach a warning notice to the start switch.**

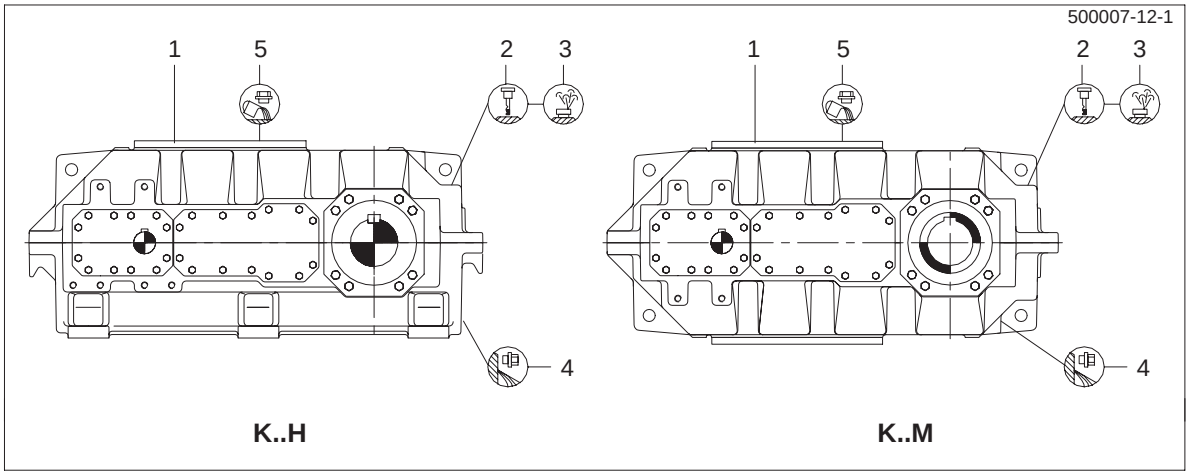

1	Inspection cover	3	Venting or plug screw	4	Oil drain plug
2	Oil dipstick			5	Oil inlet

For a detailed illustration of the gear unit, refer to the drawings in the unit documentation.

- Place a suitable container under the oil drain plug
- Remove the venting screw on the top of the housing
- Remove the oil drain plug and allow the oil to drain into the container

⚠ **The oil emerging from the housing is hot.**
Wear gloves to prevent scalding.
Remove any oil spillage immediately with an oil-binding agent.

- Clean the permanent magnet of the oil drain plug thoroughly
- Replace the oil drain plug

Note: Check the condition of the sealing ring (the sealing ring is vulcanised onto the oil drain plug). If necessary, use a new oil drain plug.

- Release the fastening bolts on the inspection cover and remove the cover (including seal) from the housing. Do not discard the seal

Caution! **Fill the gear unit with fresh oil using a filter (max. mesh 25 µm).**

Note: For the correct type of oil (of various brands) to be used refer to the operating instructions BA 7300 EN supplied separately.
Information on the type, quantity and viscosity of the oil is given on the rating plate on the gear unit.
The quantity of oil stated on the rating plate is an approximation only. The markings on the oil dipstick must **always** be observed.

- Check the oil level in the gear housing with the oil dipstick

Note: The oil level must be at the upper mark on the oil dipstick.

⚠ **Remove any oil spillage immediately with an oil-binding agent.**

- Place the inspection cover (including seal) on the housing and replace and tighten the fastening bolts (see point 10.2.7).

10.2.3 Cleaning the venting screw

Remove any dust which has collected on the venting screw. It should be cleaned at least every 3 months. To do this, the venting screw is removed, cleaned with benzine or similar agent and dried. It can also be cleaned by blowing out with compressed air.

10.2.4 Re-charging Taconite seals with grease

- Stop the gear unit by switching off the drive assembly

⚠ **Secure the drive assembly to prevent it from being started up accidentally. Attach a warning notice to the start switch.**

- Inject approx. 30 g lithium-based bearing grease into each of the lubrication points of the Taconite seal. The lubrication points are fitted with flat grease nipples type AM10x1 to DIN 3404.

⚠ **Remove and dispose of any old grease emerging from the seals.**

10.2.5 Cleaning the gear unit

- Stop the gear unit by switching off the drive assembly

⚠ **Secure the drive assembly to prevent it from being started up accidentally. Attach a warning notice to the start switch.**

- Remove any corrosion.

Caution! **Never clean the gear unit with high-pressure cleaning equipment.**

10.2.6 Topping up oil

- Stop the gear unit by switching off the drive assembly

Secure the drive assembly to prevent it from being started up accidentally. Attach a warning notice to the start switch.

- Release the fastening bolts on the inspection cover and remove the cover (including seal) from the housing. Do not discard the seal.

Caution! **Fill the gear unit with fresh oil using a filter (max. mesh 25 µm).**

Note: Always top up with the same type of oil as already in the gear unit (see point 10.2.2). Information on the type, quantity and viscosity of the oil is given on the rating plate on the gear unit.

- Check the oil level in the gear housing with the oil dipstick

Note: The oil level must be at the upper mark on the oil dipstick.

Remove any oil spillage immediately with an oil-binding agent.

- Place the inspection cover (including seal) on the housing and replace and tighten the fastening bolts (see point 10.2.7).

10.2.7 Check tightness of fastening bolts

- Stop the gear unit by switching off the drive assembly

Secure the drive assembly to prevent it from being started up accidentally. Attach a warning notice to the start switch.

- Check tightness of all fastening bolts with a torque wrench

Thread size	Strength class	Tightening torque (with µ = 0.20)
M 20	8.8	500 Nm
M 24	8.8	870 Nm
M 30	8.8	1750 Nm
M 36	8.8	3050 Nm
M 42	8.8	4950 Nm

Table 10.2: Tightening torques

Note: Damaged bolts should be replaced with new ones of the same type and strength class.

10.2.8 General inspection of gear unit

The general inspection of the gear unit should be carried out by the FLENDER Customer Service as our engineers have the experience and training necessary to identify any components requiring replacement.

10.3 Lubricants

The oil selected for use in the gear unit must be of the viscosity (VG class) stated on the rating plate. The viscosity class applies for the contractually agreed operating conditions.

FLENDER must be consulted for any change in operating conditions.

Note: For the correct type of oil (of various brands) to be used refer to the operating instructions BA 7300 EN supplied separately.

We are familiar with the composition of these lubricants and, as far as we are currently aware, they possess the properties with regard to bearing capacity, corrosion resistance, micropitting-bearing capacity and compatibility with seals and interior paint coatings which are necessary for the type of gear unit in question.

We therefore advise our customers to select one of the lubricants stated in the instructions BA 7300 EN, taking into account the VG class given on the rating plate.

Note: This recommendation is in no way intended as a guarantee for the quality of the lubricant supplied. Each lubricant manufacturer is responsible for the quality of his own product.

Should you not wish to follow our recommendation, you assume responsibility for the technical suitability of the lubricant used.

11. Spare parts, service facility addresses

11.1 Stocking spare parts

By stocking the most important spare and consumable parts on site, you can ensure that the gear unit is ready for use at any time.

To order spare parts, refer to the spare-parts list.

For further information, refer to the spare-parts drawing stated in the list.

We guarantee only the original list of spare parts supplied by us.

Caution! **Please note that spare parts and accessories not supplied by us have not been tested or approved by us. The installation or use of such products may therefore impair essential characteristics of the gear unit, thereby posing an active or passive risk to safety. FLENDER will assume no liability for damage caused by spare parts and accessories not supplied by FLENDER.**

Please note that certain components often have special production and supply specifications and that we supply you with spare parts which comply fully with the current state of technical development as well as current legislation.

When ordering spare parts always state the following:

Order no. / Item	Type / Size	Part no.	Quantity

11.2 Spare-part and service facility addresses

When ordering spare parts or the services of our specialist engineers, apply to FLENDER AG.

FLENDER Germany

A. FRIEDR. FLENDER AG
46393 Bocholt - Tel.: (0 28 71) 92-0 - Fax: (0 28 71) 92 25 96
E-mail: contact@flender.com • www.flender.com
Shipping address: Alfred - Flender - Strasse 77 - 46395 Bocholt

A. FRIEDR. FLENDER AG - Kupplungswerk Mussum
Industriepark Bocholt - Schlavenhorst 100 - 46395 Bocholt - Tel.: (0 28 71) 92 28 68 - Fax: (0 28 71) 92 25 79
E-mail: couplings@flender.com • www.flender.com

A. FRIEDR. FLENDER AG - Werk Friedrichsfeld
Am Industriepark 2 - 46562 Voerde - Tel.: (0 28 71) 92-0 - Fax: (0 28 71) 92 25 96
E-mail: contact@flender.com • www.flender.com

A. FRIEDR. FLENDER AG - Getriebewerk Penig
Thierbacher Strasse 24 - 09322 Penig - Tel.: (03 73 81) 60 - Fax: (03 73 81) 8 02 86
E-mail: ute.tappert@flender.com • www.flender.com

FLENDER - TÜBINGEN GMBH
72007 Tübingen - Tel.: (0 70 71) 7 07-0 - Fax: (0 70 71) 70 74 00
E-mail: sales-motox@flender-motox.com • www.flender.com
Shipping address: Bahnhofstrasse 40 - 72072 Tübingen

LOHER GMBH
94095 Ruhstorf - Tel.: (0 85 31) 3 90 - Fax: (0 85 31) 3 94 37
E-mail: info@loher.de • www.loher.de
Shipping address: Hans-Loher-Strasse 32 - 94099 Ruhstorf

FLENDER SERVICE GMBH
44607 Herne - Tel.: (0 23 23) 940-0 - Fax: (0 23 23) 940 333
E-mail: infos@flender-service.com • www.flender-service.com
24h Service Hotline +49 (0) 17 22 81 01 00
Shipping address: Südstrasse 111 - 44625 Herne

A. FRIEDR. FLENDER AG - FLENDER GUSS
Obere Hauptstrasse 228-230 - 09228 Chemnitz / Wittgensdorf - Tel.: (0 37 22) 64-0 - Fax: (0 37 22) 64 21 89
E-mail: flender.guss@flender-guss.com • www.flender-guss.de

Germany

A. FRIEDR. FLENDER AG
46393 BOCHOLT - TEL.: (0 28 71) 92 - 0 - FAX: (0 28 71) 92 25 96
SHIPPING ADDRESS: ALFRED - FLENDER - STRASSE 77 - 46395 BOCHOLT

E-mail: contact@flender.com • www.flender.com

VERTRIEBSZENTRUM BOCHOLT

46393 Bocholt
Alfred-Flender-Strasse 77, 46395 Bocholt
Tel.: (0 28 71) 92 - 0
Fax: (0 28 71) 92 - 14 35
E-mail: vz.bocholt@flender.com

VERTRIEBSZENTRUM STUTTGART

70472 Stuttgart
Friolzheimer Strasse 3, 70499 Stuttgart
Tel.: (07 11) 7 80 54 - 51
Fax: (07 11) 7 80 54 - 50
E-mail: vz.stuttgart@flender.com

VERTRIEBSZENTRUM MÜNCHEN

85750 Karlsfeld
Liebigstrasse 14, 85757 Karlsfeld
Tel.: (0 81 31) 90 03 - 0
Fax: (0 81 31) 90 03 - 33
E-mail: vz.muenchen@flender.com

VERTRIEBSZENTRUM BERLIN

Schlossallee 8, 13156 Berlin
Tel.: (0 30) 91 42 50 58
Fax: (0 30) 47 48 79 30
E-mail: vz.berlin@flender.com

FLENDER International

(2003-12-01)

E U R O P E

AUSTRIA
Flender Ges.m.b.H.
Industriezentrum Nö-Süd
Strasse 4, Objekt 14, Postfach 132
2355 Wiener Neudorf
Phone: +43 (0) 22 36 6 45 70
Fax: +43 (0) 22 36 6 45 70 10
E-mail: office@flender.at
www.flender.at

BELGIUM & LUXEMBOURG
N.V. Flender Belge S.A.
Cyriel Buyssestraat 130
1800 Vilvoorde
Phone: +32 (0) 2 - 2 53 10 30
Fax: +32 (0) 2 - 2 53 09 66
E-mail: sales@flender.be

BULGARIA
A. Friedr. Flender AG
Branch Office
c/o Auto - Profi GmbH
Alabin Str. 52, 1000 Sofia
Phone: +359 (0) 2 - 9 80 66 06
Fax: +359 (0) 2 - 9 80 33 01
E-mail: sofia@auto-profi.com

CROATIA / SLOVENIA
BOSNIA-HERZEGOVINA
A. Friedr. Flender AG
Branch Office
c/o HUM - Naklada d.o.o.
Mandroviceva 3, 10000 Zagreb
Phone: +385 (0) 1 - 2 30 60 25
Fax: +385 (0) 1 - 2 30 60 24
E-mail: flender@hi.hinet.hr

CZECH REPUBLIC
A. Friedr. Flender AG
Branch Office
Hotel DUO, Teplicka 17
19000 Praha 9
Phone: +420 (0) 2 - 83 88 23 00
Fax: +420 (0) 2 - 83 88 22 05
E-mail: flender_pumprla@hotelduo.cz

DENMARK
Flender Scandinavia A/S
Rugmarken 35 B, 3520 Farum
Phone: +45 - 70 22 60 03
Fax: +45 - 44 99 16 62
E-mail: kontakt@flenderscandinavia.com
www.flenderscandinavia.com

ESTHONIA / LATVIA / LITHUANIA
Flender Branch Office
Addinol Mineralöl Marketing OÜ
Suur-Söjamäe 32
11415 Tallinn / Esthonia
Phone: +372 (0) 6 - 27 99 99
Fax: +372 (0) 6 - 27 99 90
E-mail: flender@addinol.ee
www.addinol.ee

FINLAND
Flender Oy
Ruosilantie 2 B, 00390 Helsinki
Phone: +358 (0) 9 - 4 77 84 10
Fax: +358 (0) 9 - 4 36 14 10
E-mail: webmaster@flender.fi
www.flender.fi

FRANCE
Flender s.a.r.l.
3, rue Jean Monnet - B.P. 5
78996 Elancourt Cedex
Phone: +33 (0) 1 - 30 66 39 00
Fax: +33 (0) 1 - 30 66 35 13
E-mail: sales@flender.fr

SALES OFFICES:
Flender s.a.r.l.
36, rue Jean Broquin
69006 Lyon
Phone: +33 (0) 4 - 72 83 95 20
Fax: +33 (0) 4 - 72 83 95 39
E-mail: sales@flender.fr

Flender - Graffenstaden SA
1, rue du Vieux Moulin
67400 Illkirch-Graffenstaden
B.P. 84
67402 Illkirch - Graffenstaden
Phone: +33 (0) 3 - 88 67 60 00
Fax: +33 (0) 3 - 88 67 06 17
E-mail: flencomm@flender-graff.com

GREECE
Flender Hellas Ltd.
2, Delfon str., 11146 Athens
Phone: +30 210 - 2 91 72 80
Fax: +30 210 - 2 91 71 02
E-mail: flender@otenet.gr

Mangrinox S.A.
14, Grevenon str., 11855 Athens
Phone: +30 210 - 3 42 32 01
Fax: +30 210 - 3 45 99 28
E-mail: mangrinox@otenet.gr

HUNGARY
A. Friedr. Flender AG
Branch Office
Bécsi Út 3-5, 1023 Budapest
Phone: +36 (0) 1 - 3 45 07 90 / 91
Fax: +36 (0) 1 - 3 45 07 92
E-mail: jambor.laszlo@axelero.hu

ITALY
Flender Cigala S.p.A.
Parco Tecnologico Manzoni
Palazzina G
Viale delle industrie, 17
20040 Caponago (MI)
Phone: +39 (0) 02 - 95 96 31
Fax: +39 (0) 02 -95 74 39 30
E-mail: info@flendercigala.it

THE NETHERLANDS
Flender Nederland B.V.
Industrieterrein Lansinghage
Platinastraat 133
2718 ST Zoetermeer
Postbus 725
2700 AS Zoetermeer
Phone: +31 (0) 79 - 3 61 54 70
Fax: +31 (0) 79 - 3 61 54 69
E-mail: sales@flender.nl
www.flender.nl

SALES OFFICES:
Flender Nederland B.V.
Lage Brink 5-7
7317 BD Apeldoorn
Postbus 1073
7301 BH Apeldoorn
Phone: +31 (0) 55 - 5 27 50 00
Fax: +31 (0) 55 - 5 21 80 11
E-mail: tom.alberts@flender-group.com

Bruinhof B.V.
Boterdiep 37
3077 AW Rotterdam
Postbus 9607
3007 AP Rotterdam
Phone: +31 (0) 10 - 4 97 08 08
Fax: +31 (0) 10 - 4 82 43 50
E-mail: info@bruinhof.nl
www.bruinhof.nl

NORWAY
Elektroprosess AS
Frysjaveien 40, 0884 Oslo
Postboks 165, Kjelsås
0411 Oslo
Phone: +47 (0) 2 - 2 02 10 30
Fax: +47 (0) 2 - 2 02 10 50 / 51
E-mail: post@elektroprosess.no

POLAND
A. Friedr. Flender AG
Branch Office
Przedstawicielstwo w Polsce
ul. Wyzwolenia 27
43 - 190 Mikolów
Phone: +48 (0) 32 - 2 26 45 61
Fax: +48 (0) 32 - 2 26 45 62
E-mail: flender@pro.onet.pl
www.flender.pl

PORTUGAL
Rodamientos FEYC, S.A
R. Jaime Lopes Dias, 1668 CV
1750 - 124 Lissabon
Phone: +351 (0) 21 - 7 54 24 10
Fax: +351 (0) 21 - 7 54 24 19
E-mail: info@rfportugal.com

ROMANIA
A. Friedr. Flender AG
Branch Office
98 - 106, Soseaua Mihai Bravu
Sector 2, Bloc D 16, Sc 1, Apartament 4
021331 Bucuresti - 2
Phone: +40 (0) 21 - 4 91 10 08
Fax: +40 (0) 21 - 4 91 10 08
E-mail: flender@fx.ro

RUSSIA
F & F GmbH
Tjuschina 4-6
191119 St. Petersburg
Phone: +7 (0) 8 12 - 3 20 90 34
Fax: +7 (0) 8 12 - 3 40 27 60
E-mail: flendergus@mail.spbnit.ru

SLOVAKIA
A. Friedr. Flender AG
Branch Office
Vajanského 49
P.O. Box 286, 08001 Presov
Phone: +421 (0) 51 - 7 70 32 67
Fax: +421 (0) 51 - 7 70 32 67
E-mail: micenko.flender@nextra.sk

SPAIN
Flender Ibérica S.A.
Poligono Industrial San Marcos
Calle Morse, 31 (Parcela D-15)
28906 Getafe - Madrid
Phone: +34 (0) 91 - 6 83 61 86
Fax: +34 (0) 91 - 6 83 46 50
E-mail: f-iberica@flender.es
www.flender.es

SWEDEN
Flender Scandinavia
Äsenvägen 2
44339 Lerum
Phone: +46 (0) 302 - 1 25 90
Fax: +46 (0) 302 - 1 25 56
E-mail: kontakt@flenderscandinavia.com
www.flenderscandinavia.com

SWITZERLAND
Flender AG
Zeughausstr. 48
5600 Lenzburg
Phone: +41 (0) 62 8 85 76 00
Fax: +41 (0) 62 8 85 76 76
E-mail: info@flender.ch
www.flender.ch

TURKEY
Flender Güc Aktarma Sistemleri
Sanayi ve Ticaret Ltd. Sti.
IMES Sanayi, Sitesi
E Blok 502. Sokak No. 22
81260 Dudullu - Istanbul
Phone: +90 (0) 2 16 - 4 66 51 41
Fax: +90 (0) 2 16 3 64 59 13
E-mail: cuzkan@flendertr.com
www.flendertr.com

UKRAINE
A. Friedr. Flender AG
Branch Office, c/o DIV - Deutsche Industrie-
vertretung, Prospect Pobedy 44
252057 Kiev
Phone: +380 (0) 44 - 4 46 80 49
Fax: +380 (0) 44 - 2 30 29 30
E-mail: flender@div.kiev.ua

UNITED KINGDOM & EIRE
Flender Power Transmission Ltd.
Thornbury Works, Leeds Road
Bradford
West Yorkshire BD3 7EB
Phone: +44 (0) 12 74 65 77 00
Fax: +44 (0) 12 74 66 98 36
E-mail: flenders@flender-power.co.uk
www.flender-power.co.uk

SERBIA-MONTENEGRO
ALBANIA / MACEDONIA
A. Friedr. Flender AG
Branch Office
c/o G.P.Inzenjering d.o.o.
III Bulevar 54 / 19
11070 Novi Beograd
Phone: +381 (0) 11 - 60 44 73
Fax: +381 (0) 11 - 3 11 67 91
E-mail: flender@eunet.yu

A F R I C A

NORTH AFRICAN COUNTRIES
Please refer to Flender s.a.r.l.
3, rue Jean Monnet - B.P. 5
78996 Elancourt Cedex
Phone: +33 (0) 1 - 30 66 39 00
Fax: +33 (0) 1 - 30 66 35 13
E-mail: sales@flender.fr

EGYPT
Sons of Farid Hassanen
81 Matbaa Ahlia Street
Boulac 11221, Cairo
Phone: +20 (0) 2 - 5 75 15 44
Fax: +20 (0) 2 - 5 75 17 02
E-mail: hussein@sonfarid.com

SOUTH AFRICA
Flender Power Transmission (Pty.) Ltd.
Cnr. Furnace St & Quality Rd.
P.O. Box 131, Isando 1600
Johannesburg
Phone: +27 (0) 11 - 5 71 20 00
Fax: +27 (0) 11 - 3 92 24 34
E-mail: sales@flender.co.za
www.flender.co.za

SALES OFFICES:
Flender Power Transmission (Pty.) Ltd.
Unit 3 Marconi Park
9 Marconi Crescent, Montague Gardens
P.O. Box 37291
Chempet 7442, Cape Town
Phone: +27 (0) 21 - 5 51 50 03
Fax: +27 (0) 21 - 5 52 38 24
E-mail: sales@flender.co.za

Flender Power Transmission (Pty.) Ltd.
Unit 3 Goshawk Park
Falcon Industrial Estate
P.O. Box 1608
New Germany 3620, Durban
Phone: +27 (0) 31 - 7 05 38 92
Fax: +27 (0) 31 - 7 05 38 72
E-mail: sales@flender.co.za

Flender Power Transmission (Pty.) Ltd.
9 Industrial Crescent, Ext. 25
P.O. Box 17609, Witbank 1035
Phone: +27 (0) 13 - 6 92 34 38
Fax: +27 (0) 13 - 6 92 34 52
E-mail: sales@flender.co.za

Flender Power Transmission (Pty.) Ltd.
Unit 14 King Fisher Park, Alton
Cnr. Ceramic Curve & Alumina Allee
P.O. Box 101995
Meerensee 3901, Richards Bay
Phone: +27 (0) 35 - 7 51 15 63
Fax: +27 (0) 35 - 7 51 15 64
E-mail: sales@flender.co.za

A M E R I C A

ARGENTINA
Chilicote S.A.
Avda. Julio A. Roca 546
C 1067 ABN Buenos Aires
Phone: +54 (0) 11 - 43 31 66 10
Fax: +54 (0) 11 - 43 31 42 78
E-mail: chilicote@chilicote.com.ar

BRASIL
Flender Brasil Ltda.
Rua Quatorze, 60 - Cidade Industrial
32211 - 970, Contagem - MG
Phone: +55 (0) 31 - 33 69 21 00
Fax: +55 (0) 31 - 33 69 21 66
E-mail: vendas@flenderbrasil.com

SALES OFFICES:
Flender Brasil Ltda.
Rua James Watt, 142
conj. 142 - Brooklin Novo
04576 - 050, São Paulo - SP
Phone: +55 (0) 11 - 55 05 99 33
Fax: +55 (0) 11 - 55 05 30 10
E-mail: flesao@uol.com.br

Flender Brasil Ltda.
Rua Campos Salles, 1095
sala 04 - Centro 14015 - 110,
Ribeirão Preto - SP
Phone: +55 (0) 16 - 6 35 15 90
Fax: +55 (0) 16 - 6 35 11 05
E-mail: flender.ribpreto@uol.com.br

CANADA
Flender Power Transmission Inc.
215 Shields Court, Units 4 - 6
Markham, Ontario L3R 8V2
Phone: +1 (0) 9 05 - 3 05 10 21
Fax: +1 (0) 9 05 - 3 05 10 23
E-mail: flender@ca.inter.net
www.flenderpti.com

SALES OFFICE:
Flender Power Transmission Inc.
34992 Bemina Court
Abbotsford - Vancouver
B.C. V3G 1C2
Phone: +1 (0) 6 04 - 8 59 66 75
Fax: +1 (0) 6 04 - 8 59 68 78
E-mail: tvickers@rapidnet.net

CHILE / ARGENTINA / BOLIVIA
ECUADOR / PARAGUAY / URUGUAY
Flender Cono Sur Limitada
Avda. Galvarino Gallardo 1534
Providencia, Santiago
Phone: +56 (0) 2 - 2 35 32 49
Fax: +56 (0) 2 - 2 64 20 25
E-mail: flender@flender.cl
www.flender.cl

COLOMBIA
A.G.P. Representaciones Ltda.
Flender Liaison Office Colombia
Av Boyaca No 23A
50 Bodega UA 7-1, Bogotá
Phone: +57 (0) 1 - 5 70 63 53
Fax: +57 (0) 1 - 5 70 73 35
E-mail: aguerrero@agp.com.co
www.agp.com.co

MEXICO
Flender de Mexico S.A. de C.V.
17, Pte, 713 Centro
72000 Puebla
Phone: +52 (0) 2 22 - 2 37 19 00
Fax: +52 (0) 2 22 - 2 37 11 33
E-mail: szugasti@flendermexico.com
www.flendermexico.com

SALES OFFICES:
Flender de Mexico S.A. de C.V.
Lago Nargis No. 38
Col. Granada,
11520 Mexico, D.F.
Phone: +52 (0) 55 - 52 54 30 37
Fax: +52 (0) 55 - 55 31 69 39
E-mail: info@flendermexico.com

Flender de Mexico S.A. de C.V.
Ave. San Pedro No. 231-5
Col. Miravalle
64660 Monterrey, N.L.
Phone: +52 (0) 81 - 83 63 82 82
Fax: +52 (0) 81 - 83 63 82 83
E-mail: info@flendermexico.com

PERU
Potencia Industrial E.I.R.L.
Calle Victor González Olaechea N° 110
Urb. La Aurora - Miraflores,
P.O.Box: Av. 2 de Mayo N° 679
Of.108-Miraflores
Casilla N° 392, Lima 18
Phone: +51 (0) 1 - 2 42 84 68
Fax: +51 (0) 1 - 2 42 08 62
E-mail: cesarzam@chavin.rcp.net.pe

USA
Flender Corporation
950 Tollgate Road
P.O. Box 1449, Elgin, IL. 60123
Phone: +1 (0) 8 47 - 9 31 19 90
Fax: +1 (0) 8 47 - 9 31 07 11
E-mail: flender@flenderusa.com
www.flenderusa.com

Flender Corporation
Service Centers West
4234 Foster Ave.
Bakersfield, CA. 93308
Phone: +1 (0) 6 61 - 3 25 44 78
Fax: +1 (0) 6 61 - 3 25 44 70
E-mail: flender1@lightspeed.net

VENEZUELA
F. H. Transmisiones S.A.
Urbanización Buena Vista
Calle Johan Schafer o Segunda Calle
Municipio Sucre, Petare
Caracas
Phone: +58 (0) 2 - 21 52 61
Fax: +58 (0) 2 - 21 18 38
E-mail: fhtransm@telcel.net.ve
www.fhtransmisiones.com

A S I A

BANGLADESH / SRI LANKA
Please refer to Flender Limited
No. 2 St. George's Gate Road
5th Floor, Hastings
Kolkata - 700 022
Phone: +91 (0) 33 - 2 23 05 45
Fax: +91 (0) 33 - 2 23 18 57
E-mail: flender@flenderindia.com

PEOPLE'S REPUBLIC OF CHINA
Flender Power Transmission
(Tianjin) Co. Ltd.
ShuangHu Rd.- Shuangchen Rd. West
Beichen Economic Development
Area (BEDA)
Tianjin 300400
Phone: +86 (0) 22 - 26 97 20 63
Fax: +86 (0) 22 - 26 97 20 61
E-mail: flender@flendertj.com
www.flendertj.com

Flender Power Transmission
(Tianjin) Co. Ltd.
Beijing Office
C-415, Lufthansa Center
50 Liangmaqiao Road, Chaoyang District
Beijing 100016
Phone: +86 (0) 10 - 64 62 21 51
Fax: +86 (0) 10 - 64 62 21 43
E-mail: beijing@flenderprc.com.cn

Flender Power Transmission
(Tianjin) Co. Ltd.
Shanghai Office
1101-1102 Harbour Ring Plaza
18 Xizang Zhong Rd.
Shanghai 200 001
Phone: +86 (0) 21 - 53 85 31 48
Fax: +86 (0) 21 - 53 85 31 46
E-mail: shanghai@flenderprc.com.cn

Flender Power Transmission
(Tianjin) Co. Ltd.
Wuhan Office
Rm. 1503, Jianyin Building,
709 Jianshedadao
Wuhan 430 015
Phone: +86 (0) 27 - 85 48 67 15
Fax: +86 (0) 27 - 85 48 68 36
E-mail: wuhan@flenderprc.com.cn

Flender Power Transmission
(Tianjin) Co. Ltd.
Guangzhou Office
Rm. 2802, Guangzhou International
Electronics Tower
403 Huanshi Rd. East
Guangzhou 510 095
Phone: +86 (0) 20 - 87 32 60 42
Fax: +86 (0) 20 - 87 32 60 45
E-mail: guangzhou@flenderprc.com.cn

Flender Power Transmission
(Tianjin) Co. Ltd.
Chengdu Office
G-6 / F Guoxin Mansion,
77 Xiyu Street
Chengdu 610 015
Phone: +86 (0) 28 - 86 19 83 72
Fax: +86 (0) 28 - 86 19 88 10
E-mail: chengdu@flenderprc.com.cn

Flender Power Transmission
(Tianjin) Co. Ltd.
Shenyang Office
Rm. 2-163, Tower I, City Plaza Shenyan
206 Nanjing Street (N), Heping District
Shenyang 110 001
Phone: +86 (0) 24 - 23 34 20 48
Fax: +86 (0) 24 - 23 34 20 46
E-mail: shenyang@flenderprc.com.cn

Flender Power Transmission
(Tianjin) Co. Ltd.
Xi'an Office
Rm. 302, Shaanzi Zhong Da
International Mansion
30 Southern Rd.
Xi'an 710 002
Phone: +86 (0) 29 - 7 20 32 68
Fax: +86 (0) 29 - 7 20 32 04
E-mail: xian@flenderprc.com.cn

INDIA
Flender Limited
Head Office:
No. 2 St. George's Gate Road
5th Floor, Hastings
Kolkata - 700 022
Phone: +91 (0) 33 - 22 23 05 45
Fax: +91 (0) 33 - 22 23 08 30
E-mail: flender@flenderindia.com

Flender Limited
Industrial Growth Centre
Rakhajungle, Nimpura
Kharagpur - 721 302
Phone: +91 (0) 3222 - 23 33 07
Fax: +91 (0) 3222 - 23 33 64
E-mail: works@flenderindia.com

SALES OFFICES:
Flender Limited
Eastern Regional Sales Office
No. 2 St. George's Gate Road
5th Floor, Hastings
Kolkata - 700 022
Phone: +91 (0) 33 - 22 23 05 45
Fax: +91 (0) 33 - 22 23 08 30
E-mail: ero@flenderindia.com

Flender Limited
Western Regional Sales Office
Plot No. 23, Sector 19 - C
Vashi, Navi Mumbai - 400 705
Phone: +91 (0) 22 - 27 65 72 27
Fax: +91 (0) 22 - 27 65 72 28
E-mail: wro@flenderindia.com

Flender Limited
Southern Regional Sales Office
41 Nelson Manickam Road
Aminjikarai,
Chennai - 600 029
Phone: +91 (0) 44 - 23 74 39 21
Fax: +91 (0) 44 - 23 74 39 19
E-mail: sro@flenderindia.com

Flender Limited
Northern Regional Sales Office
209-A, Masjid Moth, 2nd Floor
(Behind South Extension II)
New Delhi - 110 049
Phone: +91 (0) 11 - 26 25 02 21
Fax: +91 (0) 11 - 26 25 63 72
E-mail: nro@flenderindia.com

INDONESIA
Flender Singapore Pte. Ltd.
Representative Office
Perkantoran Puri Niaga II
Jalan Puri Kencana Blok J1
No. 2i, Kembangan
Jakarta Barat 11610
Phone: +62 (0) 21 - 5 82 86 24
Fax: +62 (0) 21 - 5 82 86 23
E-mail: bobwall@cbn.net.id

IRAN
Cimaghand Co. Ltd.
P.O. Box 15745-493
No. 13, 16th East Street
Beyhaghi Ave., Argentina Sq.
Tehran 15156
Phone: +98 (0) 21 - 8 73 02 14
Fax: +98 (0) 21 - 8 73 39 70
E-mail: info@cimaghand.com

ISRAEL
Greenshpon Engineering Works Ltd.
Haamelim Street 20
P.O. Box 10108, 26110 Haifa
Phone: +972 (0) 4 - 8 72 11 87
Fax: +972 (0) 4 - 8 72 62 31
E-mail: sales@greenshpon.com
www.greenshpon.com

JAPAN
Flender Japan Co., Ltd.
WBG Marive East 21F
Nakasa 2 - 6
Mihama-ku, Chiba-shi
Chiba 261-7121
Phone: +81 (0) 43 - 2 13 39 30
Fax: +81 (0) 43 - 2 13 39 55
E-mail: contact@flender-japan.com

KOREA
Flender Ltd.
7th Fl. Dorim Bldg.
1823 Bangbae-Dong, Seocho-Ku,
Seoul 137-060
Phone: +82 (0) 2 - 34 78 63 37
Fax: +82 (0) 2 - 34 78 63 45
E-mail: flender@unitel.co.kr

KUWAIT
South Gulf Company
Al-Reqai, Plot 1, Block 96
P.O. Box 26229, Safat 13123
Phone: +965 (0) - 4 88 39 15
Fax: +965 (0) - 4 88 39 14
E-mail: adelameen@hotmail.com

LEBANON
Gabriel Acar & Fils s.a.r.l.
Dahr-el-Jamal
Zone Industrielle, Sin-el-Fil
B.P. 80484, Beyrouth
Phone: +961 (0) 1 - 49 82 72
Fax: +961 (0) 1 - 49 49 71
E-mail: gacar@beirut.com

MALAYSIA
Flender Singapore Pte. Ltd.
Representative Office
37 A - 2, Jalan PJU 1/39
Dataran Prima
47301 Petaling Jaya
Selangor Darul Ehsan
Phone: +60 (0) 3 - 78 80 42 63
Fax: +60 (0) 3 - 78 80 42 73
E-mail: flender@tm.net.my

PAKISTAN
Please refer to
A. Friedr. Flender AG
46393 Bocholt
Phone: +49 (0) 28 71 - 92 22 59
Fax: +49 (0) 28 71 - 92 15 16
E-mail: ludger.wittag@flender.com

PHILIPPINES
Flender Singapore Pte. Ltd.
Representative Office
28/F, Unit 2814
The Enterprise Centre
6766 Ayala Avenue corner
Paeso de Roxas, Makati City
Phone: +63 (0) 2 - 8 49 39 93
Fax: +63 (0) 2 - 8 49 39 17
E-mail: roman@flender.com.ph

BAHRAIN / IRAQ / JORDAN / LYBIA
OMAN / QATAR / U.A.E. / YEMEN
Please refer to A. Friedr. Flender AG
Middle East Sales Office
IMES Sanayi Sitesi
E Blok 502, Sokak No. 22
81260 Dudullu - Istanbul
Phone: +90 (0) 2 16 - 4 99 66 23
Fax: +90 (0) 2 16 - 3 64 59 13
E-mail: meso@flendertr.com

SAUDI ARABIA
South Gulf Co.
Al-Khobar, Dahran Str.
Middle East Trade Center
3rd floor, Flat # 23
P.O. Box 20434 31952 Al-Khobar
Phone: +966 (0) 3 - 8 87 53 32
Fax: +966 (0) 3 - 8 87 53 31
E-mail: adelameen@hotmail.com

SINGAPORE
Flender Singapore Pte. Ltd.
13 A, Tech Park Crescent
Singapore 637843
Phone: +65 (0) - 68 97 94 66
Fax: +65 (0) - 68 97 94 11
E-mail: flender@singnet.com.sg
www.flender.com.sg

SYRIA
Misrabi Co & Trading
Mezzeh Autostrade Transportation
Building 4/A, 5th Floor
P.O. Box 12450, Damascus
Phone: +963 (0) 11 - 6 11 67 94
Fax: +963 (0) 11 - 6 11 09 08
E-mail: ismael.misrabi@gmx.net

TAIWAN
A. Friedr. Flender AG
Taiwan Branch Company
1F, No. 5, Lane 240
Nan Yang Street, Hsichih
Taipei Hsien 221
Phone: +886 (0) 2 - 26 93 24 41
Fax: +886 (0) 2 - 26 94 36 11
E-mail: flender_tw@flender.com.tw

THAILAND
Flender Singapore Pte. Ltd.
Representative Office
23/F M Thai Tower, All Seasons Place
87 Wireless Road, Phatumwan
Bangkok 10330
Phone: +66 (0) 2 - 6 27 91 09
Fax: +66 (0) 2 - 6 27 90 01
E-mail: christian.beckers@flender.th.com

VIETNAM
Flender Singapore Pte. Ltd.
Representative Office
Suite 6/6A, 16F Saigon Tower
29 Le Duan Street, District 1
Ho Chi Minh City, Vietnam
Phone: +84 (0) 8 - 8 23 62 97
Fax: +84 (0) 8 - 8 23 62 88
E-mail: flender@hcm.vnn.vn

A U S T R A L I A

Flender (Australia) Pty. Ltd.
9 Nello Place, P.O. Box 6047
Wetherill Park
N.S.W. 2164, Sydney
Phone: +61 (0) 2 - 97 56 23 22
Fax: +61 (0) 2 - 97 56 48 92, 97 56 14 92
E-mail: sales@flender.com.au
www.flender.com.au

SALES OFFICES:
Flender (Australia) Pty. Ltd.
Suite 3, 261 Centre Rd.
Bentleigh, VIC 3204 Melbourne
Phone: +61 (0) 3 - 95 57 08 11
Fax: +61 (0) 3 - 95 57 08 22
E-mail: sales@flender.com.au

Flender (Australia) Pty. Ltd.
Suite 5, 1407 Logan Rd.
Mt. Gravatt
QLD 4122, Brisbane
Phone: +61 (0) 7 - 34 22 23 89
Fax: +61 (0) 7 - 34 22 24 03
E-mail: sales@flender.com.au

Flender (Australia) Pty. Ltd.
Suite 2 403 Great Eastern Highway
W.A. 6104, Redcliffe - Perth
Phone: +61 (0) 8 - 94 77 41 66
Fax: +61 (0) 8 - 94 77 65 11
E-mail: sales@flender.com.au

NEW ZEALAND
Please refer to Flender (Australia) Pty. Ltd.
9 Nello Place, P.O. Box 6047
Wetherill Park
N.S.W. 2164, Sydney
Phone: +61 (0) 2 - 97 56 23 22
Fax: +61 (0) 2 - 97 56 48 92
E-mail: sales@flender.com.au

12. Declaration by the manufacturer

Declaration by the manufacturer

in accordance with EC Engineering Guideline 98/37/EC, Appendix II B

We hereby declare that the

Crane gear units of types
K.SH, K.VH, K.HH, K.KH, K.DH, K.HM, K.KM, K.DM
Sizes 5 to 14

described in these Operating Instructions are intended for incorporation in a machine, and that it is prohibited to put them into service before verifying that the machine into which they are incorporated complies with the EC Guidelines (original edition 98/37/EC including any subsequent amendments thereto).

This Manufacturer's Declaration takes into account all the unified standards (inasmuch as they apply to our products) published by the European Commission in the Official Journal of the European Community.

Bocholt, 1998-10-05

Signature (person responible for products)

Operating Instructions

BA 7300 EN 01.05

Recommended Lubricants

ADDINOL	ANDEROL® Specialty Lubricants	ARAL	AVIA	BECHEM	BEL-RAY TOTAL PERFORMANCE LUBRICANTS
bp	Brugarolas	B&L	Castrol	CEPSA	cognis
DELTA OIL	Esso	FAG	FLENDER	FRAGOL	FUCHS
FUCHS LUBRITECH	galp energia	KLÜBER LUBRICATION	LE	MEGUIN OILS OF GERMANY	Mobil
MOTOREX	OMV	ORLEN OIL	Petrol Ofisi	Q8	Shell
SRS	STATOIL	TEXACO	TOTAL	SNAP	VECO
Verkol Lubricantes					

FLENDER

A. Friedr. Flender AG · 46393 Bocholt · Tel. 02871/92-0 · Telefax 02871/92-2596 · www.flender.com

Contents

1.	**Lubricants for gear units**	**3**
1.1	Required quality of gear oils	3
1.1.1	Oil groups	4
1.1.2	Oil temperatures	4
1.1.3	General oil service lives	4
1.1.4	Oil change	4
	Table A : Lubricating oils for FLENDER helical-gear, bevel helical-gear and planetary-gear units	5
	Table B : Lubricating oils for FLENDER worm-gear units	14
	Table C : Lubricating oils for FLENDER gear motors	18
1.2	Lubricating greases for gear units and rolling bearings	23
	Table D : Lubricating greases for FLENDER gear units and rolling bearings	23
2.	**Lubricants for ZAPEX couplings**	**25**
2.1	Required oil and grease quality	25
2.1.1	Oil and grease types	25
2.1.2	Oil and grease change	25
	Table E : Lubricating oils and lubricating greases for FLENDER ZAPEX couplings	26

1. Lubricants for gear units

Caution!

This lubricant recommendation does not apply to WINERGY AG gear units.

For **axle drives, marine gearboxes and turbo gear units** also special lubricant recommendations apply.

According to manufacturer's information the gear oils listed in these operating instructions are manufactured and supplied **world-wide** in the above-mentioned quality as required by FLENDER (Exceptions: Observe footnotes in the following tables).

1.1 Required quality of gear oils

For FLENDER gear units, only CLP-quality oils containing active agents to DIN 51 517-3 for increasing corrosion protection and resistance to ageing and for reducing wear in mixed-friction areas are approved. The scuffing resistance in the FZG test to DIN 51354-2 must comply with stage 12 or higher under A/8,3/90 test conditions. In the FE-8 rolling bearing test to DIN 51 819-3 rolling element wear must be under 30 mg and cage wear under 100 mg under test conditions D-7,5/80-80.

In addition, the gear oils must meet the following quality requirements demanded by FLENDER:

- Sufficiently high grey-staining resistance in accordance with FVA 54 grey-staining test
  a) for helical-gear, bevel-gear and planetary-gear units in table A, GS-criteria stage 10 or higher applies, and high grey-staining resistance GST = high
  b) for all other gear units in tables B and C, GS-criteria stage 9 or higher applies
- Low degree of foaming with less than 15 % foam formation in the FLENDER foam test
- Compatibility with elastomer materials of the radial shaft-sealing rings applied in FLENDER gear units
- Compatibility with residues of corrosion-protection agent and run-in oils used by FLENDER
- Compatibility with the paints used by FLENDER in its gear-unit interiors
- Compatibility with liquid seals between bolted-joint surfaces.

For use in worm-gear units moreover:

- Low wear, high pitting resistance and high efficiency (low temperature) in the cylindrical worm-gear unit test

Note: The use of gear oils which do not comply with the above quality requirements invalidate the FLENDER product guarantee obligation. Please note that every oil manufacturer or supplier is responsible for the quality of his product.

Always select the gear oil in accordance with the oil group and viscosity class indicated on the rating plate on the gear unit. If a different viscosity is selected, or oil of a type other than those recommended in these instructions, the operator assumes the responsibility for its technical suitability. In order to minimise the technical risk in such a case, the oil applied must be at least CLP oil quality to DIN 51 517-3, which should be confirmed by the oil manufacturer.

Caution!

The oil group and oil viscosity indicated on the rating plates as well as the instructions in the gear-unit operating instructions must be adhered to.

Deviations are permitted only after consultation with FLENDER!

1.1.1 Oil groups

In tables A, B and C five oil groups are distinguished:

- Mineral oils (MIN oil)
- Polyglycol (PG oil)
- Poly-α olefin (PAO oil)
- Biologically degradable oils (BIO oil)
- Physiologically safe oils approved in accordance with USDA H1 (PHY oil).

1.1.2 Oil temperatures

The synthetic oils have a wider temperature range and a higher viscosity index (i.e. a flatter viscosity-temperature gradient) than the mineral oils. Guideline values for temperature range:

mineral oils approx. –10 °C to +90 °C (short term +100 °C);
polyglycols and poly-α olefins approx. –20 °C to +100 °C (short term +110 °C);
bio-degradable oils (synthetic Ester) approx. –15 to +90 °C.

Note: The upper and lower operating temperatures of certain gear oils may deviate widely from the values indicated. For operating conditions outside the above mentioned temperature ranges, the flash point and pour point of the oils must be observed. For these and other data and properties of the gear oils, refer to the oil manufacturers' technical data sheets (to this purpose Flender must be consulted).

1.1.3 General oil service lives

According to the manufacturers, the following are the minimum periods during which the oils can be used without undergoing any significant change in quality. They are calculated on the basis of an average oil temperature of 80 °C:

– mineral oils, bio-degradable oils and physiologically safe oils: 2 years or 10 000 hours of service

– for poly-α olefins and polyglycols: 4 years or 20 000 hours of service.

Note: The actual service lives may be higher or lower (for temperatures over 80 °C). The general rule is that an increase in temperature of 10 K will halve the service life.

1.1.4 Oil change

The degree of purity of the oil affects the operating reliability and life span of the oil and the gear unit. It should therefore be ensured that the oil in the gear unit is clean. For the first oil change after start-up and for subsequent oil changes, the specifications in the gear-unit operating instructions must be observed. In the case of larger oil quantities, an analysis should be carried out before cleaning or changing the oil.

When changing oil of the same type, the quantity of oil remaining in the gear unit should be kept as low as possible. Generally speaking, a small remaining quantity will cause no particular problems. Gear oils of different types and manufacturers must not be mixed. If necessary, the manufacturer should confirm that the new oil is compatible with residues of the old oil. When changing to very different types of oil or oils with very different additives, especially when changing from polyglycols to another gear oil or vice versa, the gear unit must always be well flushed out with the new oil. Residues of old oil must be completely removed from the gear unit.

Caution! **Gear oils must never be mixed with other substances. Flushing with paraffin or other solvents is not permitted, as traces of these substances always remain inside the unit.**

Table A Lubricant	Code no.	Viscosity ISO-VG DIN 51519 at 40 °C (mm^2/s)	Lubricating oils for FLENDER helical-gear, bevel helical-gear and planetary-gear units			
			ADDINOL	ANDEROL® Specialty Lubricants	ARAL	AVIA
Mineral oils (MIN oil)	A11	VG 1000				
	A12	VG 680	CLP 680 S ECO GEAR 680 M		Degol BG 680 Plus Degol BMB 680 1)	GEAR RSX 680
	A13	VG 460	CLP 460 S ECO GEAR 460 M		Degol BG 460 Plus Degol BMB 460 1)	GEAR RSX 460
	A14	VG 320	CLP 320 S ECO GEAR 320 M		Degol BG 320 Plus Degol BMB 320 1)	GEAR RSX 320
	A15	VG 220	CLP 220 S ECO GEAR 220 M		Degol BG 220 Plus Degol BMB 220 1)	GEAR RSX 220
	A16	VG 150	CLP 150 S ECO GEAR 150 M		Degol BG 150 Plus Degol BMB 150 1)	GEAR RSX 150
	A17	VG 100	ECO GEAR 100 M		Degol BG 100 Plus Degol BMB 100 1)	GEAR RSX 100
Polyglycol (PG oil)	A21	VG 1000			Degol GS 1000	
	A22	VG 680			Degol GS 680	GEAR VSG 680
	A23	VG 460			Degol GS 460	GEAR VSG 460
	A24	VG 320			Degol GS 320	GEAR VSG 320
	A25	VG 220			Degol GS 220	GEAR VSG 220
	A26	VG 150			Degol GS 150	GEAR VSG 150
	A27	VG 100				GEAR VSG 100
Poly-α-olefin (PAO oil)	A31	VG 1000		4111 XEP 5999 XEP		SYNTOGEAR PE 1000
	A32	VG 680	ECO GEAR 680 S	4680 XEP 5680 XEP		SYNTOGEAR PE 680 EVOGEAR SX 680
	A33	VG 460	ECO GEAR 460 S	4460 XEP 5460 XEP	Degol PAS 460	SYNTOGEAR PE 460 EVOGEAR SX 460
	A34	VG 320	ECO GEAR 320 S	4320 XEP 5320 XEP	Degol PAS 320	SYNTOGEAR PE 320 EVOGEAR SX 320
	A35	VG 220	ECO GEAR 220 S	4220 XEP 5220 XEP	Degol PAS 220	SYNTOGEAR PE 220 EVOGEAR SX 220
	A36	VG 150	ECO GEAR 150 S	4150 XEP 5150 XEP	Degol PAS 150	SYNTOGEAR PE 150
	A37	VG 100	ECO GEAR 100 S	4100 XEP		SYNTOGEAR PE 100
Biologically degradable oils (BIO oil)	A41	VG 1000				
	A42	VG 680				
	A43	VG 460				
	A44	VG 320				
	A45	VG 220				
	A46	VG 150				
	A47	VG 100				
Physiologically safe oils (PHY oil)	A51	VG 1000				
	A52	VG 680				
	A53	VG 460				
	A54	VG 320				
	A55	VG 220				
	A56	VG 150				
	A57	VG 100				

1) with solid content MoS_2

Table A Lubricant	Code no.	Viscosity ISO-VG DIN 51519 at 40 °C (mm^2/s)	Lubricating oils for FLENDER helical-gear, bevel helical-gear and planetary-gear units			
			BECHEM	BEL-RAY TOTAL PERFORMANCE LUBRICANTS	bp	Brugarolas
Mineral oils (MIN oil)	A11	VG 1000				Beslux Gear XP 1000
	A12	VG 680			Energol GR-XF 680	Beslux Gear XP 680
	A13	VG 460			Energol GR-XF 460	Beslux Gear XP 460
	A14	VG 320			Energol GR-XF 320	Beslux Gear XP 320
	A15	VG 220			Energol GR-XF 220	Beslux Gear XP 220
	A16	VG 150			Energol GR-XF 150	
	A17	VG 100				
Polyglycol (PG oil)	A21	VG 1000				Beslux Sincart W 1000
	A22	VG 680	BERUSYNTH EP 680		Enersyn SG-XP 680	Beslux Sincart W 680
	A23	VG 460	BERUSYNTH EP 460		Enersyn SG-XP 460	Beslux Sincart W 460
	A24	VG 320	BERUSYNTH EP 320		Enersyn SG-XP 320	Beslux Sincart W 320
	A25	VG 220	BERUSYNTH EP 220		Enersyn SG-XP 220	Beslux Sincart W 220
	A26	VG 150	BERUSYNTH EP 150		Enersyn SG-XP 150	Beslux Sincart W 150
	A27	VG 100	BERUSYNTH EP 100		Enersyn SG-XP 100	
Poly-α-olefin (PAO oil)	A31	VG 1000		Bel-Ray Synth. Gear Oil 6698		Beslux Gearsint XP 1000
	A32	VG 680		Bel-Ray Synth. Gear Oil 6696		Beslux Gearsint XP 680
	A33	VG 460		Bel-Ray Synth. Gear Oil 6694	Enersyn EP-XF 460	Beslux Gearsint XP 460
	A34	VG 320		Bel-Ray Synth. Gear Oil 6692	Enersyn EP-XF 320	Beslux Gearsint XP 320
	A35	VG 220		Bel-Ray Synth. Gear Oil 6690	Enersyn EP-XF 220	Beslux Gearsint XP 220
	A36	VG 150		Bel-Ray Synth. Gear Oil 6688	Enersyn EP-XF 150	Beslux Gearsint XP 150
	A37	VG 100			Enersyn EP-XF 100	
Biologically degradable oils (BIO oil)	A41	VG 1000				
	A42	VG 680				
	A43	VG 460				
	A44	VG 320				
	A45	VG 220				
	A46	VG 150				
	A47	VG 100				
Physiologically safe oils (PHY oil)	A51	VG 1000				
	A52	VG 680				
	A53	VG 460				
	A54	VG 320				
	A55	VG 220				
	A56	VG 150				
	A57	VG 100				

Table A Lubricant	Code no.	Viscosity ISO-VG DIN 51519 at 40 °C (mm^2/s)	Lubricating oils for FLENDER helical-gear, bevel helical-gear and planetary-gear units			
			B&L	Castrol classic	Castrol performance	CEPSA
Mineral oils (MIN oil)	A11	VG 1000		Alpha SP 1000	Optigear BM 1000 Tribol 1100 / 1000	CEPSA AEROGEAR 1000
	A12	VG 680		Alpha SP 680	Optigear BM 680 Tribol 1100 / 680	CEPSA AEROGEAR 680
	A13	VG 460		Alpha SP 460 Alpha MAX 460	Optigear BM 460 Tribol 1100 / 460	CEPSA AEROGEAR 460
	A14	VG 320		Alpha SP 320 Alpha MAX 320	Optigear BM 320 Tribol 1100 / 320	CEPSA AEROGEAR 320
	A15	VG 220		Alpha SP 220 Alpha MAX 220	Optigear BM 220 Tribol 1100 / 220	CEPSA AEROGEAR 220
	A16	VG 150		Alpha SP 150 Alpha MAX 150	Optigear BM 150 Tribol 1100 / 150	
	A17	VG 100		Alpha SP 100 Alpha MAX 100	Optigear BM 100 Tribol 1100 / 100	
Polyglycol (PG oil)	A21	VG 1000			Tribol 800 / 1000	
	A22	VG 680			Tribol 800 / 680	
	A23	VG 460			Tribol 800 / 460	
	A24	VG 320			Tribol 800 / 320	
	A25	VG 220			Tribol 800 / 220	
	A26	VG 150			Tribol 800 / 150	
	A27	VG 100			Tribol 800 / 100	
Poly-α-olefin (PAO oil)	A31	VG 1000				
	A32	VG 680		Alphasyn EP 680		AEROGEAR SYNT 680
	A33	VG 460		Optigear Synth. A 460 Alphasyn EP 460	Optigear Synth. X 460 Tribol 1710 / 460	AEROGEAR SYNT 460
	A34	VG 320		Optigear Synth. A 320 Alphasyn EP 320	Optigear Synth. X 320 Tribol 1710 / 320	AEROGEAR SYNT 320
	A35	VG 220		Optigear Synth. A 220 Alphasyn EP 220	Optigear Synth. X 220 Tribol 1710 / 220	AEROGEAR SYNT 220
	A36	VG 150		Alphasyn EP 150		
	A37	VG 100				
Biologically degradable oils (BIO oil)	A41	VG 1000				
	A42	VG 680	RIVOLTA S.G.L. 680			
	A43	VG 460			Tribol BioTop 1418 / 460	
	A44	VG 320	RIVOLTA S.G.L. 320		Tribol BioTop 1418 / 320	
	A45	VG 220	RIVOLTA S.G.L. 220		Tribol BioTop 1418 / 220	
	A46	VG 150			Tribol BioTop 1418 / 150	
	A47	VG 100	RIVOLTA S.G.L. 100			
Physiologically safe oils (PHY oil)	A51	VG 1000				
	A52	VG 680			Optileb GT 680	
	A53	VG 460			Optileb GT 460	
	A54	VG 320			Optileb GT 320	
	A55	VG 220			Optileb GT 220	
	A56	VG 150			Optileb GT 150	
	A57	VG 100			Optileb GT 100	

Table A			Lubricating oils for FLENDER helical-gear, bevel helical-gear and planetary-gear units			
Lubricant	Code no.	**Viscosity** ISO-VG DIN 51519 at 40 °C (mm^2/s)	cognis	DELTA OIL	Esso	FUCHS
Mineral oils (MIN oil)	A11	VG 1000				RENOLIN CLP1000 PLUS
	A12	VG 680			SPARTAN EP 680 3)	RENOLIN CLP 680 / RENOLIN CLP 680 PLUS
	A13	VG 460		EP Industrial G 460	SPARTAN EP 460 3)	RENOLIN CLP 460 / RENOLIN CLP 460 PLUS
	A14	VG 320		EP Industrial G 320	SPARTAN EP 320 3)	RENOLIN CLP 320 / RENOLIN CLP 320 PLUS
	A15	VG 220		EP Industrial G 220	SPARTAN EP 220 3)	RENOLIN CLP 220 / RENOLIN CLP 220 PLUS
	A16	VG 150			SPARTAN EP 150 3)	RENOLIN CLP 150 / RENOLIN CLP 150 PLUS
	A17	VG 100			SPARTAN EP 100 3)	RENOLIN CLP 100 / RENOLIN CLP 100 PLUS
Polyglycol (PG oil)	A21	VG 1000	Breox SL 1000			RENOLIN PG 1000
	A22	VG 680	Breox SL 680			RENOLIN PG 680
	A23	VG 460	Breox SL 460			RENOLIN PG 460
	A24	VG 320	Breox SL 320			RENOLIN PG 320
	A25	VG 220	Breox SL 220			RENOLIN PG 220
	A26	VG 150	Breox SL 150			RENOLIN PG 150
	A27	VG 100				RENOLIN PG 100
Poly-α-olefin (PAO oil)	A31	VG 1000				
	A32	VG 680				RENOLIN UNISYN CLP 680
	A33	VG 460				RENOLIN UNISYN CLP 460
	A34	VG 320				RENOLIN UNISYN CLP 320
	A35	VG 220				RENOLIN UNISYN CLP 220
	A36	VG 150				RENOLIN UNISYN CLP 150
	A37	VG 100				RENOLIN UNISYN CLP 100
Biologically degradable oils (BIO oil)	A41	VG 1000				PLANTOGEAR 1000 S
	A42	VG 680				PLANTOGEAR 680 S
	A43	VG 460				PLANTOGEAR 460 S
	A44	VG 320				PLANTOGEAR 320 S
	A45	VG 220				PLANTOGEAR 220 S
	A46	VG 150				PLANTOGEAR 150 S
	A47	VG 100				PLANTOGEAR 100 S
Physiologically safe oils (PHY oil)	A51	VG 1000	Breox FGL 1000 2)			
	A52	VG 680	Breox FGL 680 2)			
	A53	VG 460	Breox FGL 460 2)			
	A54	VG 320	Breox FGL 320 2)			
	A55	VG 220	Breox FGL 220 2)			
	A56	VG 150	Breox FGL 150 2)			
	A57	VG 100				

2) PG oil
3) ESSO guarantees the qualities required by FLENDER only for products from Europe

Table A			Lubricating oils for FLENDER helical-gear, bevel helical-gear and planetary-gear units			
Lubricant	Code no.	**Viscosity** ISO-VG DIN 51519 at 40 °C (mm^2/s)	FUCHS LUBRITECH	FRAGOL	galp energia	KLÜBER LUBRICATION
Mineral oils (MIN oil)	A11	VG 1000	GEARMASTER CLP 1000			
	A12	VG 680	GEARMASTER CLP 680			Klüberoil GEM 1 - 680 N
	A13	VG 460	GEARMASTER CLP 460			Klüberoil GEM 1 - 460 N
	A14	VG 320	GEARMASTER CLP 320			Klüberoil GEM 1 - 320 N
	A15	VG 220	GEARMASTER CLP 220			Klüberoil GEM 1 - 220 N
	A16	VG 150	GEARMASTER CLP 150			Klüberoil GEM 1 - 150 N
	A17	VG 100	GEARMASTER CLP 100			Klüberoil GEM 1 - 100 N
Polyglycol (PG oil)	A21	VG 1000	GEARMASTER PGP 1000	Ucolub BSL-IG 1000		Klübersynth. GH 6 - 1000
	A22	VG 680	GEARMASTER PGP 680	Ucolub BSL-IG 680		Klübersynth. GH 6 - 680
	A23	VG 460	GEARMASTER PGP 460	Ucolub BSL-IG 460		Klübersynth. GH 6 - 460
	A24	VG 320	GEARMASTER PGP 320	Ucolub BSL-IG 320		Klübersynth. GH 6 - 320
	A25	VG 220	GEARMASTER PGP 220	Ucolub BSL-IG 220		Klübersynth. GH 6 - 220
	A26	VG 150	GEARMASTER PGP 150	Ucolub BSL-IG 150		Klübersynth. GH 6 - 150
	A27	VG 100	GEARMASTER PGP 100	Ucolub BSL-IG 100		
Poly-α-olefin (PAO oil)	A31	VG 1000	GEARMASTER SYN 1000			
	A32	VG 680	GEARMASTER SYN 680			Klübersynth. GEM 4 - 680 N
	A33	VG 460	GEARMASTER SYN 460	Ucolub N-PA 460	Galp Transgear SMP 460	Klübersynth. GEM 4 - 460 N
	A34	VG 320	GEARMASTER SYN 320	Ucolub N-PA 320	Galp Transgear SMP 320	Klübersynth. GEM 4 - 320 N
	A35	VG 220	GEARMASTER SYN 220	Ucolub N-PA 220	Galp Transgear SMP 220	Klübersynth. GEM 4 - 220 N
	A36	VG 150	GEARMASTER SYN 150		Galp Transgear SMP 150	Klübersynth. GEM 4 - 150 N
	A37	VG 100	GEARMASTER SYN 100			
Biologically degradable oils (BIO oil)	A41	VG 1000	GEARMASTER ECO 1000			
	A42	VG 680	GEARMASTER ECO 680			
	A43	VG 460	GEARMASTER ECO 460			
	A44	VG 320	GEARMASTER ECO 320			Klübersynth. GEM 2 - 320
	A45	VG 220	GEARMASTER ECO 220			Klübersynth. GEM 2 - 220
	A46	VG 150	GEARMASTER ECO 150			
	A47	VG 100	GEARMASTER ECO 100			
Physiologically safe oils (PHY oil)	A51	VG 1000		Ucolub BSL 1000 4)		
	A52	VG 680		Ucolub BSL 680 4)		
	A53	VG 460		Ucolub BSL 460 4)		
	A54	VG 320		Ucolub BSL 320 4)		
	A55	VG 220		Ucolub BSL 220 4)		
	A56	VG 150		Ucolub BSL 150 4)		
	A57	VG 100				

4) PG oil

Table A Lubricant	Code no.	Viscosity ISO-VG DIN 51519 at 40 °C (mm^2/s)	Lubricating oils for FLENDER helical-gear, bevel helical-gear and planetary-gear units			
				MEGUIN OILS OF GERMANY	Mobil	MOTOREX
Mineral oils (MIN oil)	A11	VG 1000				GEAR COMPOUND PLUS 1000
	A12	VG 680	609 ALMASOL Vari-Purpose Gear Lubricant		Mobilgear XMP 680	GEAR COMPOUND PLUS 680
	A13	VG 460	608 ALMASOL Vari-Purpose Gear Lubricant		Mobilgear XMP 460	GEAR COMPOUND PLUS 460
	A14	VG 320	605 ALMASOL Vari-Purpose Gear Lubricant		Mobilgear XMP 320	GEAR COMPOUND PLUS 320
	A15	VG 220	607 ALMASOL Vari-Purpose Gear Lubricant		Mobilgear XMP 220	GEAR COMPOUND PLUS 220
	A16	VG 150	604 ALMASOL Vari-Purpose Gear Lubricant		Mobilgear XMP 150	GEAR COMPOUND PLUS 150
	A17	VG 100	606 ALMASOL Vari-Purpose Gear Lubricant		Mobilgear XMP 100	GEAR COMPOUND PLUS 100
Polyglycol (PG oil)	A21	VG 1000				
	A22	VG 680				
	A23	VG 460				
	A24	VG 320				
	A25	VG 220				
	A26	VG 150				
	A27	VG 100				
Poly-α-olefin (PAO oil)	A31	VG 1000			Mobil SHC 639	GEAR SINTEC CLP 1000
	A32	VG 680		megol Gearoil Synth 680	Mobilgear SHC XMP680	GEAR SINTEC CLP 680
	A33	VG 460		megol Gearoil Synth 460	Mobil SHC 634 Mobilgear SHC XMP460	GEAR SINTEC CLP 460
	A34	VG 320		megol Gearoil Synth 320	Mobil SHC 632 Mobilgear SHC XMP320	GEAR SINTEC CLP 320
	A35	VG 220		megol Gearoil Synth 220	Mobil SHC 630 Mobilgear SHC XMP220	GEAR SINTEC CLP 220
	A36	VG 150			Mobil SHC 629 Mobilgear SHC XMP150	GEAR SINTEC CLP 150
	A37	VG 100				GEAR SINTEC CLP 100
Biologically degradable oils (BIO oil)	A41	VG 1000				
	A42	VG 680				
	A43	VG 460				
	A44	VG 320				
	A45	VG 220				
	A46	VG 150				
	A47	VG 100				
Physiologically safe oils (PHY oil)	A51	VG 1000				
	A52	VG 680				
	A53	VG 460				
	A54	VG 320				
	A55	VG 220				
	A56	VG 150				
	A57	VG 100				

Table A			Lubricating oils for FLENDER helical-gear, bevel helical-gear and planetary-gear units			
Lubricant	Code no.	**Viscosity** ISO-VG DIN 51519 at 40 °C (mm^2/s)	OMV	ORLEN OIL	Petrol Ofisi	Q8
Mineral oils (MIN oil)	A11	VG 1000	OMV gear HST 1000		PO Gravis MP 1000	
	A12	VG 680	OMV gear HST 680	TRANSOL PREMIUM 680	PO Gravis MP 680	
	A13	VG 460	OMV gear HST 460	TRANSOL PREMIUM 460	PO Gravis MP 460	
	A14	VG 320	OMV gear HST 320	TRANSOL PREMIUM 320	PO Gravis MP 320	Q8 Goya NT 320
	A15	VG 220	OMV gear HST 220	TRANSOL PREMIUM 220	PO Gravis MP 220	Q8 Goya NT 220
	A16	VG 150	OMV gear HST 150		PO Gravis MP 150	Q8 Goya NT 150
	A17	VG 100	OMV gear HST 100		PO Gravis MP 100	
Polyglycol (PG oil)	A21	VG 1000				
	A22	VG 680				
	A23	VG 460				
	A24	VG 320				
	A25	VG 220				
	A26	VG 150				
	A27	VG 100				
Poly-α-olefin (PAO oil)	A31	VG 1000		TRANSGEAR PE 1000	PO Gravis SP 1000	
	A32	VG 680		TRANSGEAR PE 680	PO Gravis SP 680	
	A33	VG 460		TRANSGEAR PE 460	PO Gravis SP 460	Q8 El Greco 460
	A34	VG 320		TRANSGEAR PE 320	PO Gravis SP 320	Q8 El Greco 320
	A35	VG 220		TRANSGEAR PE 220	PO Gravis SP 220	Q8 El Greco 220
	A36	VG 150				Q8 El Greco 150
	A37	VG 100				
Biologically degradable oils (BIO oil)	A41	VG 1000				
	A42	VG 680				
	A43	VG 460				
	A44	VG 320				
	A45	VG 220				
	A46	VG 150				
	A47	VG 100				
Physiologically safe oils (PHY oil)	A51	VG 1000				
	A52	VG 680				
	A53	VG 460				
	A54	VG 320				
	A55	VG 220				
	A56	VG 150				
	A57	VG 100				

Table A			Lubricating oils for FLENDER helical-gear, bevel helical-gear and planetary-gear units			
Lubricant	Code no.	**Viscosity** ISO-VG DIN 51519 at 40 °C (mm^2/s)	Shell	STATOIL	TEXACO	TOTAL
Mineral oils (MIN oil)	A11	VG 1000				KASSILLA GMP 1000 CARTER EP 1000
	A12	VG 680		LoadWay EP 680		KASSILLA GMP 680 CARTER EP 680
	A13	VG 460	Shell Omala F 460	LoadWay EP 460	Meropa WM 460 Auriga EP 460	KASSILLA GMP 460 CARTER EP 460
	A14	VG 320	Shell Omala F 320	LoadWay EP 320	Meropa WM 320 Auriga EP 320	KASSILLA GMP 320 CARTER EP 320
	A15	VG 220	Shell Omala F 220	LoadWay EP 220	Meropa WM 220 Auriga EP 220	KASSILLA GMP 220 CARTER EP 220
	A16	VG 150			Meropa WM 150 Auriga EP 150	
	A17	VG 100			Meropa WM 100 Auriga EP 100	
Polyglycol (PG oil)	A21	VG 1000	Shell Tivela S 1000 Shell Cassida WG 1000			
	A22	VG 680	Shell Tivela S 680 Shell Cassida WG 680			
	A23	VG 460	Shell Tivela S 460 Shell Cassida WG 460			
	A24	VG 320	Shell Tivela S 320 Shell Cassida WG 320			
	A25	VG 220	Shell Tivela S 220 Shell Cassida WG 220			
	A26	VG 150	Shell Tivela S 150 Shell Cassida WG 150			
	A27	VG 100				
Poly-α-olefin (PAO oil)	A31	VG 1000				CARTER SH 1000
	A32	VG 680	Shell Omala HD 680			CARTER SH 680
	A33	VG 460	Shell Omala HD 460			CARTER SH 460
	A34	VG 320	Shell Omala HD 320	MERETA 320		CARTER SH 320
	A35	VG 220	Shell Omala HD 220	MERETA 220		CARTER SH 220
	A36	VG 150	Shell Omala HD 150	MERETA 150		CARTER SH 150
	A37	VG 100				
Biologically degradable oils (BIO oil)	A41	VG 1000				
	A42	VG 680				
	A43	VG 460	Shell Omala EPB 460			
	A44	VG 320	Shell Omala EPB 320			
	A45	VG 220	Shell Omala EPB 220			
	A46	VG 150	Shell Omala EPB 150			
	A47	VG 100	Shell Omala EPB 100			
Physiologically safe oils (PHY oil)	A51	VG 1000	Shell Cassida WG 1000 5)			
	A52	VG 680	Shell Cassida WG 680 5)			
	A53	VG 460	Shell Cassida WG 460 5)			Keystone Nevastane SY 460 5)
	A54	VG 320	Shell Cassida WG 320 5)			Keystone Nevastane SY 320 5)
	A55	VG 220	Shell Cassida WG 220 5)			Keystone Nevastane SY 220 5)
	A56	VG 150				
	A57	VG 100				

5) PG oil

Table A			Lubricating oils for FLENDER helical-gear, bevel helical-gear and planetary-gear units			
Lubricant	Code no.	**Viscosity** ISO-VG DIN 51519 at 40 °C (mm^2/s)				
Mineral oils (MIN oil)	A11	VG 1000		VECO MATRANOL XP 1000		
	A12	VG 680	TUNGEAR 680 6)	VECO MATRANOL XP 680	COMPOUND MP 680	
	A13	VG 460	TUNGEAR 460 6)	VECO MATRANOL XP 460	COMPOUND MP 460	
	A14	VG 320	TUNGEAR 320 6)	VECO MATRANOL XP 320	COMPOUND MP 320	
	A15	VG 220	TUNGEAR 220 6)	VECO MATRANOL XP 220	COMPOUND MP 220	
	A16	VG 150			COMPOUND MP 150	
	A17	VG 100				
Polyglycol (PG oil)	A21	VG 1000				
	A22	VG 680				
	A23	VG 460				
	A24	VG 320				
	A25	VG 220				
	A26	VG 150				
	A27	VG 100				
Poly-α-olefin (PAO oil)	A31	VG 1000				
	A32	VG 680				
	A33	VG 460				
	A34	VG 320				
	A35	VG 220				
	A36	VG 150				
	A37	VG 100				
Biologically degradable oils (BIO oil)	A41	VG 1000				
	A42	VG 680				
	A43	VG 460				
	A44	VG 320				
	A45	VG 220				
	A46	VG 150				
	A47	VG 100				
Physiologically safe oils (PHY oil)	A51	VG 1000				
	A52	VG 680				
	A53	VG 460				
	A54	VG 320				
	A55	VG 220				
	A56	VG 150				
	A57	VG 100				

6) TUNGEAR is approved for Brazil under the name of GEAROIL in VG 220, 320, 460 and 680. Distributor: TRIBOTECHNICA Lubrificantes Sinteticos Sao Paulo.
TUNGEAR is approved for India under the name of Mox-Active Gear oil in VG 220, 320 and 460. Distributor: OKS Speciality Lubricants Bombay.

Table B Lubricant	Code no.	Viscosity ISO-VG DIN 51519 at 40 °C (mm^2/s)	Lubricating oils for FLENDER worm-gear units			
			ARAL	AVIA	BECHEM	bp
Mineral oils (MIN oil)	B11	VG 1000				Energol GR-XP 1000
	B12	VG 680	Degol BG 680			Energol GR-XP 680
	B13	VG 460	Degol BG 460			Energol GR-XP 460
	B14	VG 320	Degol BG 320			Energol GR-XP 320
	B15	VG 220	Degol BG 220			Energol GR-XP 220
	B16	VG 150	Degol BG 150			Energol GR-XP 150
	B17	VG 100	Degol BG 100			Energol GR-XP 100
Polyglycol (PG oil)	B21	VG 1000	Degol GS 1000			
	B22	VG 680	Degol GS 680	GEAR VSG 680	BERUSYNTH EP 680	Enersyn SG-XP 680
	B23	VG 460	Degol GS 460	GEAR VSG 460	BERUSYNTH EP 460	Enersyn SG-XP 460
	B24	VG 320	Degol GS 320	GEAR VSG 320	BERUSYNTH EP 320	Enersyn SG-XP 320
	B25	VG 220	Degol GS 220	GEAR VSG 220	BERUSYNTH EP 220	Enersyn SG-XP 220
	B26	VG 150	Degol GS 150	GEAR VSG 150	BERUSYNTH EP 150	Enersyn SG-XP 150
	B27	VG 100		GEAR VSG 100	BERUSYNTH EP 100	Enersyn SG-XP 100
Poly-α-olefin (PAO oil)	B31	VG 1000				
	B32	VG 680				
	B33	VG 460				
	B34	VG 320				
	B35	VG 220				
	B36	VG 150				
	B37	VG 100				
Biologically degradable oils (BIO oil)	B41	VG 1000				
	B42	VG 680				
	B43	VG 460				
	B44	VG 320				
	B45	VG 220				
	B46	VG 150				
	B47	VG 100				
Physiologically safe oils (PHY oil)	B51	VG 1000				
	B52	VG 680				
	B53	VG 460				
	B54	VG 320				
	B55	VG 220				
	B56	VG 150				
	B57	VG 100				

Table B			Lubricating oils for FLENDER worm-gear units			
Lubricant	Code no.	**Viscosity** ISO-VG DIN 51519 at 40 °C (mm^2/s)	Castrol performance	cognis	Esso	FUCHS
Mineral oils (MIN oil)	B11	VG 1000	Optigear BM 1000 / Tribol 1100 / 1000			
	B12	VG 680	Optigear BM 680 / Tribol 1100 / 680		SPARTAN EP 680 1)	
	B13	VG 460	Optigear BM 460 / Tribol 1100 / 460		SPARTAN EP 460 1)	
	B14	VG 320	Optigear BM 320 / Tribol 1100 / 320		SPARTAN EP 320 1)	
	B15	VG 220	Optigear BM 220 / Tribol 1100 / 220		SPARTAN EP 220 1)	
	B16	VG 150	Optigear BM 150 / Tribol 1100 / 150		SPARTAN EP 150 1)	
	B17	VG 100	Optigear BM 100 / Tribol 1100 / 100		SPARTAN EP 100 1)	
Polyglycol (PG oil)	B21	VG 1000	Optiflex A 1000 / Tribol 800 / 1000	Breox SL 1000		RENOLIN PG 1000
	B22	VG 680	Optiflex A 680 / Tribol 800 / 680	Breox SL 680		RENOLIN PG 680
	B23	VG 460	Optiflex A 460 / Tribol 800 / 460	Breox SL 460		RENOLIN PG 460
	B24	VG 320	Optiflex A 320 / Tribol 800 / 320	Breox SL 320		RENOLIN PG 320
	B25	VG 220	Optiflex A 220 / Tribol 800 / 220	Breox SL 220		RENOLIN PG 220
	B26	VG 150	Optiflex A 150 / Tribol 800 / 150	Breox SL 150		RENOLIN PG 150
	B27	VG 100	Optiflex A 100 / Tribol 800 / 100			RENOLIN PG 100
Poly-α-olefin (PAO oil)	B31	VG 1000				
	B32	VG 680				
	B33	VG 460				
	B34	VG 320				
	B35	VG 220				
	B36	VG 150				
	B37	VG 100				
Biologically degradable oils (BIO oil)	B41	VG 1000				
	B42	VG 680				
	B43	VG 460				
	B44	VG 320				
	B45	VG 220				
	B46	VG 150				
	B47	VG 100				
Physiologically safe oils (PHY oil)	B51	VG 1000		Breox FGL 1000 2)		
	B52	VG 680	Tribol FoodProof 1800 / 680 2)	Breox FGL 680 2)		
	B53	VG 460	Tribol FoodProof 1800 / 460 2)	Breox FGL 460 2)		
	B54	VG 320	Tribol FoodProof 1800 / 320 2)	Breox FGL 320 2)		
	B55	VG 220	Tribol FoodProof 1800 / 220 2)	Breox FGL 220 2)		
	B56	VG 150		Breox FGL 150 2)		
	B57	VG 100				

1) ESSO guarantees the qualities required by FLENDER only for products from Europe
2) PG oil

Table B			Lubricating oils for FLENDER worm-gear units			
Lubricant	Code no.	**Viscosity** ISO-VG DIN 51519 at 40 °C (mm^2/s)	FUCHS LUBRITECH	KLÜBER LUBRICATION	Mobil	Shell
Mineral oils (MIN oil)	B11	VG 1000				
	B12	VG 680		Klüberoil GEM 1 - 680 N	Mobilgear 636 / Mobilgear XMP 680	
	B13	VG 460		Klüberoil GEM 1 - 460 N	Mobilgear 634 / Mobilgear XMP 460	
	B14	VG 320		Klüberoil GEM 1 - 320 N	Mobilgear 632 / Mobilgear XMP 320	
	B15	VG 220		Klüberoil GEM 1 - 220 N	Mobilgear 630 / Mobilgear XMP 220	
	B16	VG 150		Klüberoil GEM 1 - 150 N	Mobilgear 629 / Mobilgear XMP 150	
	B17	VG 100		Klüberoil GEM 1 - 100 N	Mobilgear 627 / Mobilgear XMP 100	
Polyglycol (PG oil)	B21	VG 1000	GEARMASTER PGP 1000	SYNTHESO D 1000 EP		Shell Tivela S 1000 / Shell Cassida WG 1000
	B22	VG 680	GEARMASTER PGP 680	SYNTHESO D 680 EP		Shell Tivela S 680 / Shell Cassida WG 680
	B23	VG 460	GEARMASTER PGP 460	SYNTHESO D 460 EP		Shell Tivela S 460 / Shell Cassida WG 460
	B24	VG 320	GEARMASTER PGP 320	SYNTHESO D 320 EP		Shell Tivela S 320 / Shell Cassida WG 320
	B25	VG 220	GEARMASTER PGP 220	SYNTHESO D 220 EP		Shell Tivela S 220 / Shell Cassida WG 220
	B26	VG 150	GEARMASTER PGP 150	SYNTHESO D 150 EP		Shell Tivela S 150
	B27	VG 100	GEARMASTER PGP 100	SYNTHESO D 100 EP		
Poly-α-olefin (PAO oil)	B31	VG 1000				
	B32	VG 680				
	B33	VG 460				
	B34	VG 320				
	B35	VG 220				
	B36	VG 150				
	B37	VG 100				
Biologically degradable oils (BIO oil)	B41	VG 1000				
	B42	VG 680				
	B43	VG 460				
	B44	VG 320				
	B45	VG 220				
	B46	VG 150				
	B47	VG 100				
Physiologically safe oils (PHY oil)	B51	VG 1000				Shell Cassida WG 1000 3)
	B52	VG 680				Shell Cassida WG 680 3)
	B53	VG 460				Shell Cassida WG 460 3)
	B54	VG 320				Shell Cassida WG 320 3)
	B55	VG 220				Shell Cassida WG 220 3)
	B56	VG 150				
	B57	VG 100				

3) PG oil

Table B			Lubricating oils for FLENDER worm-gear units			
Lubricant	Code no.	**Viscosity** ISO-VG DIN 51519 at 40 °C (mm^2/s)	SRS			
Mineral oils (MIN oil)	B11	VG 1000				
	B12	VG 680	Ersolan 680			
	B13	VG 460	Ersolan 460			
	B14	VG 320	Ersolan 320			
	B15	VG 220	Ersolan 220			
	B16	VG 150	Ersolan 150			
	B17	VG 100	Ersolan 100			
Polyglycol (PG oil)	B21	VG 1000				
	B22	VG 680				
	B23	VG 460				
	B24	VG 320				
	B25	VG 220				
	B26	VG 150				
	B27	VG 100				
Poly-α-olefin (PAO oil)	B31	VG 1000				
	B32	VG 680				
	B33	VG 460				
	B34	VG 320				
	B35	VG 220				
	B36	VG 150				
	B37	VG 100				
Biologically degradable oils (BIO oil)	B41	VG 1000				
	B42	VG 680				
	B43	VG 460				
	B44	VG 320				
	B45	VG 220				
	B46	VG 150				
	B47	VG 100				
Physiologically safe oils (PHY oil)	B51	VG 1000				
	B52	VG 680				
	B53	VG 460				
	B54	VG 320				
	B55	VG 220				
	B56	VG 150				
	B57	VG 100				

Table C Lubricant	Code no.	Viscosity ISO-VG DIN 51519 at 40 °C (mm^2/s)	Lubricating oils for FLENDER gear motors			
			ADDINOL	ANDEROL® Specialty Lubricants	ARAL	AVIA
Mineral oils (MIN oil)	C15	VG 220	CLP 220 S ECO GEAR 220 M		Degol BG 220 Plus Degol BG 220 1)	GEAR RSX 220
	C16	VG 150	CLP 150 S ECO GEAR 150 M		Degol BG 150 Plus Degol BG 150 1)	GEAR RSX 150
	C17	VG 100	ECO GEAR 100 M		Degol BG 100 Plus Degol BG 100 1)	GEAR RSX 100
Polyglycol (PG oil)	C23	VG 460			Degol GS 460	GEAR VSG 460
	C24	VG 320			Degol GS 320	GEAR VSG 320
	C25	VG 220			Degol GS 220	GEAR VSG 220
Poly-α-olefin (PAO oil)	C33	VG 460	ECO GEAR 460 S	4460 XEP 5460 XEP	Degol PAS 460	SYNTOGEAR PE 460 EVOGEAR SX 460
	C34	VG 320	ECO GEAR 320 S	4320 XEP 5320 XEP	Degol PAS 320	SYNTOGEAR PE 320 EVOGEAR SX 320
	C35	VG 220	ECO GEAR 220 S	4220 XEP 5220 XEP	Degol PAS 220	SYNTOGEAR PE 220 EVOGEAR SX 220
Biologically degradable oils (BIO oil)	C44	VG 320				
	C45	VG 220				
	C46	VG 150				
Physiologically safe oils (PHY oil)	C53	VG 460				
	C54	VG 320				
	C55	VG 220				

1) with solid content MoS_2

Table C Lubricant	Code no.	Viscosity ISO-VG DIN 51519 at 40 °C (mm^2/s)	Lubricating oils for FLENDER gear motors			
			BECHEM	BEL-RAY TOTAL PERFORMANCE LUBRICANTS	bp	Brugarolas
Mineral oils (MIN oil)	C15	VG 220			Energol GR-XF 220 Energol GR-XP 220	Beslux Gear XP 220
	C16	VG 150			Energol GR-XF 150	
	C17	VG 100				
Polyglycol (PG oil)	C23	VG 460	BERUSYNTH EP 460		Enersyn SG-XP 460	Beslux Sincart W 460
	C24	VG 320	BERUSYNTH EP 320		Enersyn SG-XP 320	Beslux Sincart W 320
	C25	VG 220	BERUSYNTH EP 220		Enersyn SG-XP 220	Beslux Sincart W 220
Poly-α-olefin (PAO oil)	C33	VG 460		Bel-Ray Synth. Gear Oil 6694	Enersyn EP-XF 460	Beslux Gearsint XP 460
	C34	VG 320		Bel-Ray Synth. Gear Oil 6692	Enersyn EP-XF 320	Beslux Gearsint XP 320
	C35	VG 220		Bel-Ray Synth. Gear Oil 6690	Enersyn EP-XF 220	Beslux Gearsint XP 220
Biologically degradable oils (BIO oil)	C44	VG 320				
	C45	VG 220				
	C46	VG 150				
Physiologically safe oils (PHY oil)	C53	VG 460				
	C54	VG 320				
	C55	VG 220				

Table C Lubricant	Code no.	Viscosity ISO-VG DIN 51519 at 40 °C (mm^2/s)	Lubricating oils for FLENDER gear motors			
			B&L	Castrol classic	Castrol performance	CEPSA
Mineral oils (MIN oil)	C15	VG 220		Alpha SP 220 Alpha MAX 220	Optigear BM 220 Tribol 1100 / 220	CEPSA AEROGEAR 220
	C16	VG 150		Alpha SP 150 Alpha MAX 150	Optigear BM 150 Tribol 1100 / 150	
	C17	VG 100		Alpha SP 100 Alpha MAX 100	Optigear BM 100 Tribol 1100 / 100	
Polyglycol (PG oil)	C23	VG 460			Optiflex A 460 Tribol 800 / 460	
	C24	VG 320			Optiflex A 320 Tribol 800 / 320	
	C25	VG 220			Optiflex A 220 Tribol 800 / 220	
Poly-α-olefin (PAO oil)	C33	VG 460		Optigear Synth. A 460 Alphasyn EP 460	Optigear Synth. X 460 Tribol 1710 / 460	AEROGEAR SYNT 460
	C34	VG 320		Optigear Synth. A 320 Alphasyn EP 320	Optigear Synth. X 320 Tribol 1710 / 320	AEROGEAR SYNT 320
	C35	VG 220		Optigear Synth. A 220 Alphasyn EP 220	Optigear Synth. X 220 Tribol 1710 / 220	AEROGEAR SYNT 220
Biologically degradable oils (BIO oil)	C44	VG 320	RIVOLTA S.G.L. 320		Tribol BioTop 1418 / 320	
	C45	VG 220	RIVOLTA S.G.L. 220		Tribol BioTop 1418 / 220	
	C46	VG 150			Tribol BioTop 1418 / 150	
Physiologically safe oils (PHY oil)	C53	VG 460			Optileb GT 460 FoodProof 1800/460 2)	
	C54	VG 320			Optileb GT 320 FoodProof 1800/320 2)	
	C55	VG 220			Optileb GT 220 FoodProof 1800/220 2)	

2) PG oil

Table C Lubricant	Code no.	Viscosity ISO-VG DIN 51519 at 40 °C (mm^2/s)	Lubricating oils for FLENDER gear motors			
			cognis	DELTA OIL	Esso	FUCHS
Mineral oils (MIN oil)	C15	VG 220		EP Industrial G 220	SPARTAN EP 220 3)	RENOLIN CLP 220 RENOLIN CLP 220 PLUS
	C16	VG 150			SPARTAN EP 150 3)	RENOLIN CLP 150 RENOLIN CLP 150 PLUS
	C17	VG 100			SPARTAN EP 100 3)	RENOLIN CLP 100 RENOLIN CLP 100 PLUS
Polyglycol (PG oil)	C23	VG 460	Breox SL 460			RENOLIN PG 460
	C24	VG 320	Breox SL 320			RENOLIN PG 320
	C25	VG 220	Breox SL 220			RENOLIN PG 220
Poly-α-olefin (PAO oil)	C33	VG 460				RENOLIN UNISYN CLP 460
	C34	VG 320				RENOLIN UNISYN CLP 320
	C35	VG 220				RENOLIN UNISYN CLP 220
Biologically degradable oils (BIO oil)	C44	VG 320				PLANTOGEAR 320 S
	C45	VG 220				PLANTOGEAR 220 S
	C46	VG 150				PLANTOGEAR 150 S
Physiologically safe oils (PHY oil)	C53	VG 460	Breox FGL 460 4)			
	C54	VG 320	Breox FGL 320 4)			
	C55	VG 220	Breox FGL 220 4)			

3) ESSO guarantees the qualities required by FLENDER only for products from Europe
4) PG oil

Table C Lubricant	Code no.	Viscosity ISO-VG DIN 51519 at 40 °C (mm^2/s)	Lubricating oils for FLENDER gear motors			
			FUCHS LUBRITECH	FRAGOL	galp energia	KLÜBER LUBRICATION
Mineral oils (MIN oil)	C15	VG 220	GEARMASTER CLP 220			Klüberoil GEM 1 - 220 N
	C16	VG 150	GEARMASTER CLP 150			Klüberoil GEM 1 - 150 N
	C17	VG 100	GEARMASTER CLP 100			Klüberoil GEM 1 - 100 N
Polyglycol (PG oil)	C23	VG 460	GEARMASTER PGP 460	Ucolub BSL-IG 460		SYNTHESO D 460 EP
	C24	VG 320	GEARMASTER PGP 320	Ucolub BSL-IG 320		SYNTHESO D 320 EP
	C25	VG 220	GEARMASTER PGP 220	Ucolub BSL-IG 220		SYNTHESO D 220 EP
Poly-α-olefin (PAO oil)	C33	VG 460	GEARMASTER SYN 460	Ucolub N-PA 460	Galp Transgear SMP 460	Klübersynth. GEM 4 - 460 N
	C34	VG 320	GEARMASTER SYN 320	Ucolub N-PA 320	Galp Transgear SMP 320	Klübersynth. GEM 4 - 320 N
	C35	VG 220	GEARMASTER SYN 220	Ucolub N-PA 220	Galp Transgear SMP 220	Klübersynth. GEM 4 - 220 N
Biologically degradable oils (BIO oil)	C44	VG 320	GEARMASTER ECO 320			Klübersynth. GEM 2 - 320
	C45	VG 220	GEARMASTER ECO 220			Klübersynth. GEM 2 - 220
	C46	VG 150	GEARMASTER ECO 150			
Physiologically safe oils (PHY oil)	C53	VG 460		Ucolub BSL 460 5)		
	C54	VG 320		Ucolub BSL 320 5)		
	C55	VG 220		Ucolub BSL 220 5)		

5) PG oil

Table C Lubricant	Code no.	Viscosity ISO-VG DIN 51519 at 40 °C (mm^2/s)	Lubricating oils for FLENDER gear motors			
			LE	MEGUIN OILS OF GERMANY	Mobil	MOTOREX
Mineral oils (MIN oil)	C15	VG 220	607 ALMASOL Vari-Purpose Gear Lubricant		Mobilgear 630 Mobilgear XMP 220	GEAR COMPOUND PLUS 220
	C16	VG 150	604 ALMASOL Vari-Purpose Gear Lubricant		Mobilgear 629 Mobilgear XMP 150	GEAR COMPOUND PLUS 150
	C17	VG 100	606 ALMASOL Vari-Purpose Gear Lubricant		Mobilgear 627 Mobilgear XMP 100	GEAR COMPOUND PLUS 100
Polyglycol (PG oil)	C23	VG 460				
	C24	VG 320				
	C25	VG 220				
Poly-α-olefin (PAO oil)	C33	VG 460		megol Gearoil Synth 460	Mobil SHC 634 Mobilgear SHC XMP460	GEAR SINTEC CLP 460
	C34	VG 320		megol Gearoil Synth 320	Mobil SHC 632 Mobilgear SHC XMP320	GEAR SINTEC CLP 320
	C35	VG 220		megol Gearoil Synth 220	Mobil SHC 630 Mobilgear SHC XMP220	GEAR SINTEC CLP 220
Biologically degradable oils (BIO oil)	C44	VG 320				
	C45	VG 220				
	C46	VG 150				
Physiologically safe oils (PHY oil)	C53	VG 460				
	C54	VG 320				
	C55	VG 220				

Table C Lubricant	Code no.	Viscosity ISO-VG DIN 51519 at 40 °C (mm^2/s)	Lubricating oils for FLENDER gear motors			
			OMV	ORLEN OIL	Petrol Ofisi	Q8
Mineral oils (MIN oil)	C15	VG 220	OMV gear HST 220	TRANSOL PREMIUM 220	PO Gravis MP 220	Q8 Goya NT 220
	C16	VG 150	OMV gear HST 150		PO Gravis MP 150	Q8 Goya NT 150
	C17	VG 100	OMV gear HST 100		PO Gravis MP 100	
Polyglycol (PG oil)	C23	VG 460				
	C24	VG 320				
	C25	VG 220				
Poly-α-olefin (PAO oil)	C33	VG 460		TRANSGEAR PE 460	PO Gravis SP 460	Q8 El Greco 460
	C34	VG 320		TRANSGEAR PE 320	PO Gravis SP 320	Q8 El Greco 320
	C35	VG 220		TRANSGEAR PE 220	PO Gravis SP 220	Q8 El Greco 220
Biologically degradable oils (BIO oil)	C44	VG 320				
	C45	VG 220				
	C46	VG 150				
Physiologically safe oils (PHY oil)	C53	VG 460				
	C54	VG 320				
	C55	VG 220				

Table C Lubricant	Code no.	Viscosity ISO-VG DIN 51519 at 40 °C (mm^2/s)	Lubricating oils for FLENDER gear motors			
			Shell	SRS	STATOIL	TEXACO
Mineral oils (MIN oil)	C15	VG 220	Shell Omala F 220 Shell Omala 220	Ersolan 220	LoadWay EP 220	Meropa WM 220 Auriga EP 220
	C16	VG 150	Shell Omala F 150 Shell Omala 150	Ersolan 150		Meropa WM 150 Auriga EP 150
	C17	VG 100	Shell Omala F 100 Shell Omala 100	Ersolan 100		Meropa WM 100 Auriga EP 100
Polyglycol (PG oil)	C23	VG 460	Shell Tivela S 460 Shell Cassida WG 460			
	C24	VG 320	Shell Tivela S 320 Shell Cassida WG 320			
	C25	VG 220	Shell Tivela S 220 Shell Cassida WG 220			
Poly-α-olefin (PAO oil)	C33	VG 460	Shell Omala HD 460			
	C34	VG 320	Shell Omala HD 320		MERETA 320	
	C35	VG 220	Shell Omala HD 220		MERETA 220	
Biologically degradable oils (BIO oil)	C44	VG 320	Shell Omala EPB 320			
	C45	VG 220	Shell Omala EPB 220			
	C46	VG 150	Shell Omala EPB 150			
Physiologically safe oils (PHY oil)	C53	VG 460	Shell Cassida WG 460 6)			
	C54	VG 320	Shell Cassida WG 320 6)			
	C55	VG 220	Shell Cassida WG 220 6)			

6) PG oil

Table C Lubricant	Kenn-ziffer	Viscosity ISO-VG DIN 51519 at 40 °C (mm^2/s)	Lubricating oils for FLENDER gear motors			
			TOTAL	SHAP	VECO	Verkol Lubricantes
Mineral oils (MIN oil)	C15	VG 220	KASSILLA GMP 220 CARTER EP 220	TUNGEAR 220 7)	VECO MATRANOL XP 220	COMPOUND MP 220
	C16	VG 150				COMPOUND MP 150
	C17	VG 100				
Polyglycol (PG oil)	C23	VG 460				
	C24	VG 320				
	C25	VG 220				
Poly-α-olefin (PAO oil)	C33	VG 460	CARTER SH 460			
	C34	VG 320	CARTER SH 320			
	C35	VG 220	CARTER SH 220			
Biologically degradable oils (BIO oil)	C44	VG 320				
	C45	VG 220				
	C46	VG 150				
Physiologically safe oils (PHY oil)	C53	VG 460	Kestone Nevastane SY 460 8)			
	C54	VG 320	Kestone Nevastane SY 320 8)			
	C55	VG 220	Kestone Nevastane SY 220 8)			

7) TUNGEAR is approved for Brazil under the name of GEAROIL in VG 220. Distributor: TRIBOTECHNICA Lubrificantes Sinteticos Sao Paulo.
TUNGEAR is approved for India under the name of Mo_X-Active Gear oil in VG 220. Distributor: OKS Speciality Lubricants Bombay.
8) PG oil

1.2 Lubricating greases for gear units and rolling bearings

For special gear unit applications, grease lubrication of the gears and/or bearings may be necessary.

Note: Greases may be used only if their use is specified in the operating instructions for the gear unit. The relubrication periods must be adhered to.

Gear greases are suitable for the lubrication of gears and bearings with closed gear units (e.g. small gear units) and open drives with low peripheral speeds (e.g. for girth gears, racks).

As well as lubrication, rolling bearing greases are used for the special sealing of bearing points, e.g. with vertical gear-unit connection shafts or against environmental action such as dust or water spray.

Note: In closed gear units with internal oil lubrication the gear oils must not be allowed to mix with bearing greases.

Table D			**Lubricating greases for FLENDER gear units and rolling bearings**			
Lubricant	Code no.	**Consistency** NLGI class DIN 51818	ARAL	bp	Castrol classic	Castrol performance
Gear greases (MIN-GF) Mineral oil base	G13	3				Viscogen 1)
	G14	2				
	G15	1				
	G16	0				
	G17	00	Aralub FDP 00		CLS Grease	Tribol 5000 Optitemp OG 0
	G18	000				Longtime PD 00 MA Mehrzweckfett 00
Rolling bearing greases (MIN-WF) Mineral oil base Lithium saponification	H12	4				
	H13	3	Aralub HL3	Energrease LS 3	Spheerol AP 3	
	H14	2	Aralub HL2	Energrease LS 2	Spheerol AP 2 Spheerol EPL 2	Tribol 4020 / 220-2 Longtime PD 2
	H15	1				Tribol 3785 2)

1) with solid content MoS_2
2) Mixture of mineral oil and PAO

Table D			**Lubricating greases for FLENDER gear units and rolling bearings**			
Lubricant	Code no.	**Consistency** NLGI class DIN 51818	FAG	FUCHS	FUCHS LUBRITECH	KLÜBER LUBRICATION
Gear greases (MIN-GF) Mineral oil base	G13	3				
	G14	2				
	G15	1				
	G16	0				
	G17	00				MICROLUBE GB 00
	G18	000				
Rolling bearing greases (MIN-WF) Mineral oil base Lithium saponification	H12	4				
	H13	3		Renolit FWA 220 Renolit H 443-HD 88		
	H14	2	Arcanol L 186 V 3)	Renolit H 443-HD 88 Renolit FWA 160	LAGERMEISTER EP 2	CENTOPLEX GLP 402
	H15	1				

3) Li, Ca saponification

Table D	Code no.	Consistency NLGI class DIN 51818	Lubricating greases for FLENDER gear units and rolling bearings			
Lubricant			Mobil	Shell	SRS	TEXACO
Gear greases (MIN-GF) Mineral oil base	G13	3				Glissando FG 30 EP
	G14	2				
	G15	1				
	G16	0	Mobilux EP 004		Wiolub GFW	
	G17	00		Alvania GL 00		Marfak 00
	G18	000				
Rolling bearing greases (MIN-WF) Mineral oil base Lithium saponification	H12	4				
	H13	3	Mobilux EP 3	Alvania RL 3 Alvania EP / LF 3		
	H14	2	Mobilux EP 2	Alvania RL 2 Alvania EP / LF 2	Wiolub LFK 2	Multifak 2 Multifak 20
	H15	1				

Table D	Code no.	Consistency NLGI class DIN 51818	Lubricating greases for FLENDER gear units and rolling bearings			
Lubricant			TOTAL			
Gear greases (MIN-GF) Mineral oil base	G13	3				
	G14	2				
	G15	1				
	G16	0	Multis EP 0			
	G17	00	Multis EP 00			
	G18	000				
Rolling bearing greases (MIN-WF) Mineral oil base Lithium saponification	H12	4				
	H13	3	Multis 3 Multis EP 3			
	H14	2	Multis 2 Multis EP 2			
	H15	1	Multis 1 Multis EP 1			

2. Lubricants for ZAPEX couplings

Note: For **FLUDEX couplings**, special lubricant recommendations apply.

According to manufacturer's information the oils and greases listed in these operating instructions are manufactured and supplied **world-wide** in the above-mentioned quality as required by FLENDER (Exceptions: Observe footnotes in the tables).

2.1 Required oil and grease quality

For FLENDER ZAPEX couplings, only oils and greases containing active agents to DIN 51 517-3 for increasing corrosion protection and resistance to ageing and for reducing wear in mixed-friction areas are approved. The scuffing resistance of the oils in the FZG test to DIN 51 354-2 must comply with stage 12 or higher under A/8,3/90 test conditions.

In addition, the oils and greases must meet the following quality requirements specified by FLENDER:

- Compatibility with elastomer materials of the shaft-sealing rings
- Compatibility with liquid seals between bolted-joint surfaces.

Note: The use of lubricants which do not comply with the above quality requirements may invalidate our product guarantee. Please note that every lubricant manufacturer or supplier is responsible for the quality of his product.

Which lubricant to select always depends on the viscosity or NLGI class indicated in these operating instructions. If a different viscosity or NLGI class or a lubricant of a type other than those recommended in these instructions is used, the operator is responsible for its technical suitability. To minimise the technical risk in such cases, we recommend using a lubricant of the above indicated quality, which should be accompanied by a statement of suitability by the lubricant manufacturer.

Caution! **The instructions given in the operating instructions for the couplings must be observed!**

Deviations are permitted only after consultation with FLENDER!

2.1.1 Oil and grease types

Note: The upper and lower limits for the operating temperatures (flash point, pour point) of individual oils and greases may vary considerably. For these and other data and properties of oils and greases, refer to the lubricant manufacturers' technical data sheets.

According to the manufacturers, the following are the minimum periods during which the oils or greases can be used without undergoing any significant change in quality:

– with use at up to 70 °C after approx. 8 000 operating hours, max. 2 years,
  with use at over 70 °C after approx. 3 000 operating hours, max. 1 year.

2.1.2 Oil and grease change

The degree of purity of the lubricant affects the operating reliability and life span of the lubricant and the coupling. Care must always be taken that the oil or grease in the coupling is clean. For the first lubricant change after start-up of the coupling and for subsequent lubricant changes, the specifications in the operating instructions for the coupling must be observed. With larger lubricant quantities, an anlysis should be carried out to find out whether cleaning or changing is required.

When changing lubricant of the same type, the quantity of lubricant remaining in the coupling should be kept as low as possible. Generally speaking, a small remaining quantity will cause no particular problems. Lubricants of different types and manufacturers must not be mixed together. If necessary, confirmation that the new lubricant is compatible with residues of the old lubricant should be obtained from the manufacturer.

Caution! **Lubricants must never be mixed with other substances.**

Table E Lubricant	Code no.	Oil: Viscosity in cSt at 40 °C DIN 51519 Grease: Consistency DIN 51818		Lubricating oils and lubricating greases for FLENDER ZAPEX couplings			
				ADDINOL	ARAL	AVIA	bp
Mineral oils (MIN oil)	I11	ISO class	VG 1000				
	I12		VG 680	CLP 680 S ECO GEAR 680 M	Degol BG 680 Plus	GEAR RSX 680	Energol GR-XF 680
	I13		VG 460	CLP 460 S ECO GEAR 460 M	Degol BG 460 Plus	GEAR RSX 460	Energol GR-XF 460
	I14		VG 320				
Liquefied greases (MIN-FLF) Mineral oil base	J15	NLGI class	1				
	J16		0		Aralub Fließfett AN 0		
	J17		00				Energrease LS-EP 00
	J18		000				

Table E Lubricant	Code no.	Oil: Viscosity in cSt at 40 °C DIN 51519 Grease: Consistency DIN 51818		Lubricating oils and lubricating greases for FLENDER ZAPEX couplings			
				Brugarolas	Castrol classic	Castrol performance	CEPSA
Mineral oils (MIN oil)	I11	ISO class	VG 1000				CEPSA AEROGEAR 1000
	I12		VG 680	Beslux gear XP 680	Alpha SP 680	Tribol 1100 / 680 Optigear BM 680	CEPSA AEROGEAR 680
	I13		VG 460	Beslux gear XP 460	Alpha SP 460 Alpha MAX 460	Tribol 1100 / 460 Optigear BM 460	CEPSA AEROGEAR 460
	I14		VG 320				
Liquefied greases (MIN-FLF) Mineral oil base	J15	NLGI class	1				
	J16		0				
	J17		00		CLS Grease	Tribol 3020/1000-00 Longtime PD 00	
	J18		000				

Table E Lubricant	Code no.	Oil: Viscosity in cSt at 40 °C DIN 51519 Grease: Consistency DIN 51818		Lubricating oils and lubricating greases for FLENDER ZAPEX couplings			
				DELTA OIL	Esso	FLENDER	FUCHS
Mineral oils (MIN oil)	I11	ISO class	VG 1000				
	I12		VG 680		SPARTAN EP 680 1)		Renolin EPX 680 Renolin CLP 680 PLUS
	I13		VG 460	EP Industrial 460	SPARTAN EP 460 1)		Renolin EPX 460 Renolin CLP 460 PLUS
	I14		VG 320				
Liquefied greases (MIN-FLF) Mineral oil base	J15	NLGI class	1				
	J16		0			FLENDER Hochleistungsfett	
	J17		00				RENOLIT SO-D 6024
	J18		000				

1) ESSO guarantees the qualities required by FLENDER only for products from Europe

Table E Lubricant	Code no.	Oil: Viscosity in cSt at 40 °C DIN 51519 Grease: Consistency DIN 51818		Lubricating oils and lubricating greases for FLENDER ZAPEX couplings			
				FUCHS LUBRITECH	KLÜBER LUBRICATION	LE	Mobil
Mineral oils (MIN oil)	I11	ISO class	VG 1000				
	I12		VG 680	GEARMASTER CLP 680	STRUCTOVIS BHD-MF	609 ALMASOL Vari-Purpose Gear Lubricant	Mobilgear 636 Mobilgear XMP 680
	I13		VG 460	GEARMASTER CLP 460		608 ALMASOL Vari-Purpose Gear Lubricant	Mobilgear 634 Mobilgear XMP 460
	I14		VG 320				
Liquefied greases (MIN-FLF) Mineral oil base	J15	NLGI class	1				
	J16		0		GRAFLOSKON C-SG 500 Plus		
	J17		00				Mobilux EP 004
	J18		000				

Table E Lubricant	Code no.	Oil: Viscosity in cSt at 40 °C DIN 51519 Grease: Consistency DIN 51818		Lubricating oils and lubricating greases for FLENDER ZAPEX couplings			
				MOTOREX	OMV	PO Petrol Ofisi	Shell
Mineral oils (MIN oil)	I11	ISO class	VG 1000			PO Gravis MP 1000	
	I12		VG 680	GEAR COMPOUND PLUS 680	OMV gear HST 680	PO Gravis MP 680	Shell Omala 680
	I13		VG 460	GEAR COMPOUND PLUS 460	OMV gear HST 460	PO Gravis MP 460	Shell Omala 460 Shell Omala F 460
	I14		VG 320			PO Gravis MP 320	
Liquefied greases (MIN-FLF) Mineral oil base	J15	NLGI class	1				
	J16		0				
	J17		00				Alvina GL 00
	J18		000				

Table E Lubricant	Code no.	Oil: Viscosity in cSt at 40 °C DIN 51519 Grease: Consistency DIN 51818		Lubricating oils and lubricating greases for FLENDER ZAPEX couplings			
				STATOIL	TEXACO	SHAP	VECO
Mineral oils (MIN oil)	I11	ISO class	VG 1000				VECO MATRANOL XP 1000
	I12		VG 680			TUNGEAR 680 2)	VECO MATRANOL XP 680
	I13		VG 460		Meropa WM 460 Auriga EP 460	TUNGEAR 460 2)	VECO MATRANOL XP 460
	I14		VG 320	LoadWay EP 320			
Liquefied greases (MIN-FLF) Mineral oil base	J15	NLGI class	1				
	J16		0				
	J17		00				
	J18		000				

2) TUNGEAR is approved for Brazil under the name of GEAROIL in VG 460 and 680. Distributor: TRIBOTECHNICA Lubrificantes Sinteticos Sao Paulo.
TUNGEAR is approved for India under the name of Mox-Active Gear oil in VG 460. Distributor: OKS Speciality Lubricants Bombay.

Table E				Lubricating oils and lubricating greases for FLENDER ZAPEX couplings			
Lubricant	Code no.	**Oil: Viscosity** in cSt at 40 °C DIN 51519 **Grease: Consistency** DIN 51818		Verkol Lubricantes			
Mineral oils (MIN oil)	I11	**ISO class**	VG 1000				
	I12		VG 680				
	I13		VG 460				
	I14		VG 320	COMPOUND MP 320			
Liquefied greases (MIN-FLF) Mineral oil base	J15	**NLGI class**	1				
	J16		0				
	J17		00				
	J18		000				

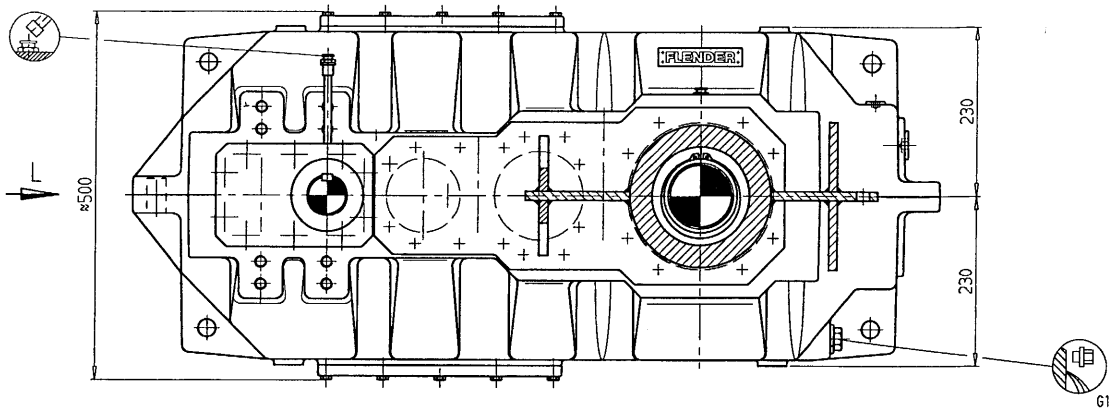

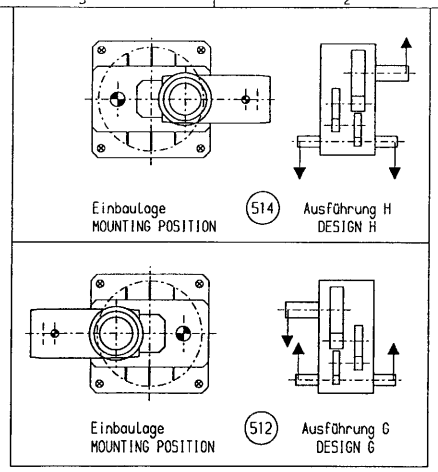

Umlaufende Teile müssen vom Käufer gegen unbeabsichtigtes Berühren gesichert werden!
(Gesetz über technische Arbeitsmittel)

The purchaser is responsible for the provision of safety guards.

Zylinderformtoleranz für Wellen und Bohrungen IT6 nach DIN ISO 286

Cylindricity tolerance for shafts and bores IT6 to DIN ISO 286

Wellenenden mit Nuten und Paßfedern nach DIN 6885/1 und Zentrierungen nach DIN 332, Form DS

Shaft ends with keyways and keys acc. to DIN 6885/1, and center. acc. to DIN 332, form DS.

Gleichartige Pfeile kennzeichnen die Abhängigkeit der Drehrichtungen!

Arrows show relative directions of rotation

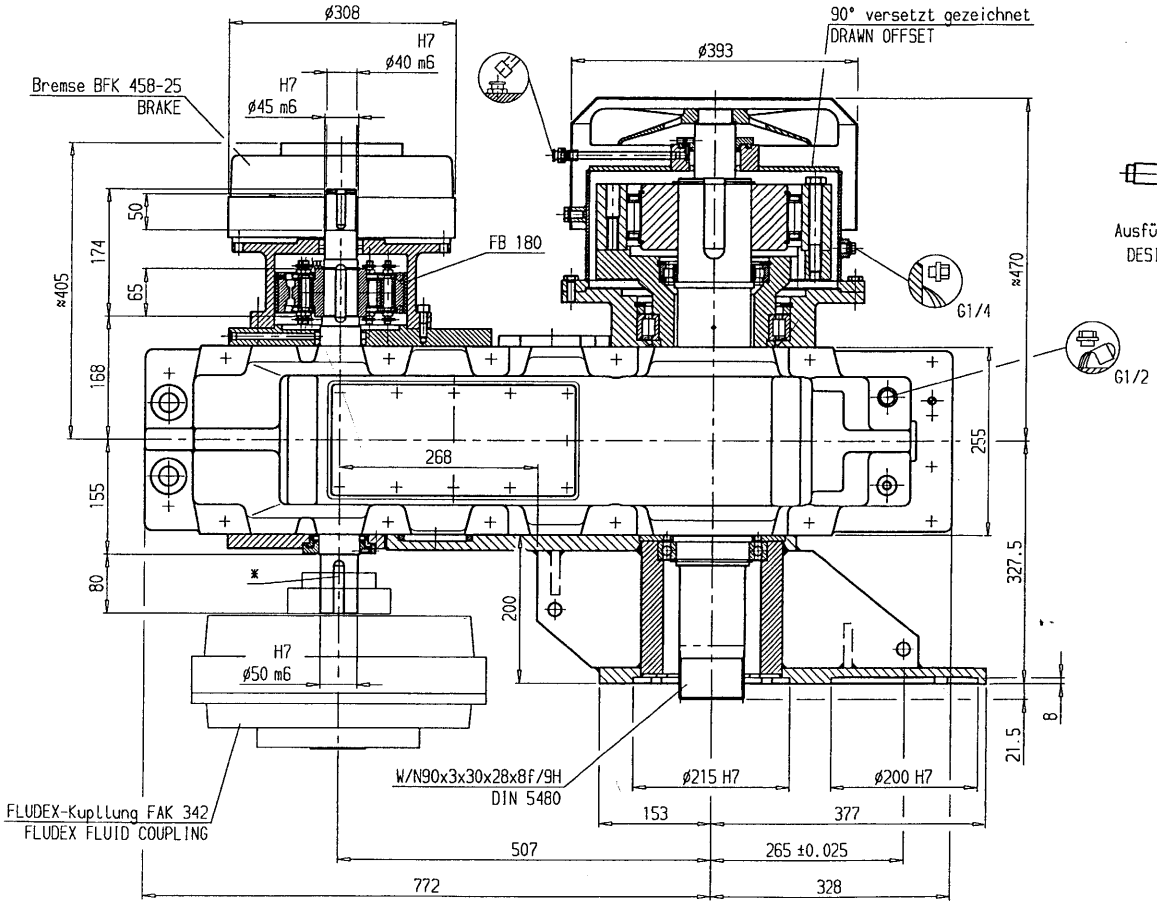

L
Einbaulage
MOUNTING POSITION
M 1:10

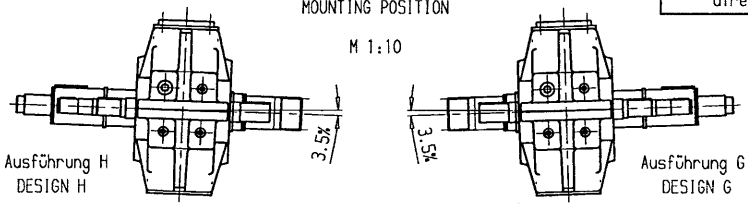

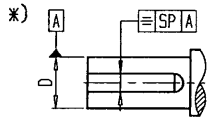

D		SP
8	≤22	0,035
>22	≤50	0,035
>50	≤85	0,055
>85	≤150	0,055
>150	≤230	0,07
>230	≤290	0,07
>290	≤500	0,1

Ausf. G	419 0519-220-1...1
Ausf. H	419 0519-200-1...1
Ausf. G	419 0294-220-1...1
Ausf. H	419 0294-200-1...1
Ausf. G	418 8481-220-1...1
Ausf. H	418 8481-200-1...1

SERIAL NO.	FABRIK-NR.	
TYPE	BAUART	K3UF
SIZE	GRÖßE	06
DESIGN	AUSFÜHRUNG	H / G
POWER RATING	LEISTUNG P	23.3 kW
INPUT SPEED	ANTRIEBSDREHZAHL n1	1470 1/min
OUTPUT SPEED	ABTRIEBSDREHZAHL n2	51.38 1/min
EXACT RATIO	ÜBERSETZUNG I ist	28.608
OIL QUANTITY	ÖLMENGE	≈ 22 L
OIL VISCOSITY	ÖL-VISKOSITÄT ISO VG 320	PAO-Oel synth.Oel

Auftr.-Nr. . 2005-08-02 gesichert

Tolerierung nach DIN ISO 8015

Allgemeintoleranzen ≤30 ±0,3 sonst nach DIN ISO 2768-mH

FLENDER

Werkstoff /-Nr. .

Benennung: MASSZCHNG K3UF 06 — Schl.-Nr.: 0290

an P2DA23/24 So-Adapter/D2 80mm Länger

Rohteil nach Zeichnung — sonst nach Zeichnung

Nicht gekennzeichnete Oberflächen: Rauhwerte Ra in µm

Gez.	ZGE	2005-07-27	Eichler
Gepr.	ZGE	2005-07-27	Eichler
Norm	.	.	.
	Abt.	Datum	Name

Maßstab 1:5 — Gewicht (kg) 650

Trägheitsmoment J (kgm²) .

Basis-Nr. | Äl | Ä

Modell-Nr. | Anz. | Teil

Format Art 7 | Zeichnungs-Nr. 6 095 227 | Äl

Ersatz für . | Aus Zchng. 6 093 735

Maße in mm

Schutzvermerk DIN 34 beachten

PLOTT-DATUM: 19-AUG-2005 12:44:39 H. Eichler, Martin/PZB

FLENDER	FLENDER – Zahnradgetriebe Gear unit Ersatzteilzeichnung/ Spare part drawing	Bauart / Type K3UF Größe / Size 5-8	Ausführung / Design H/G

Bei Korrespondenz bitte angeben / Please quote in correspondence | EZ .

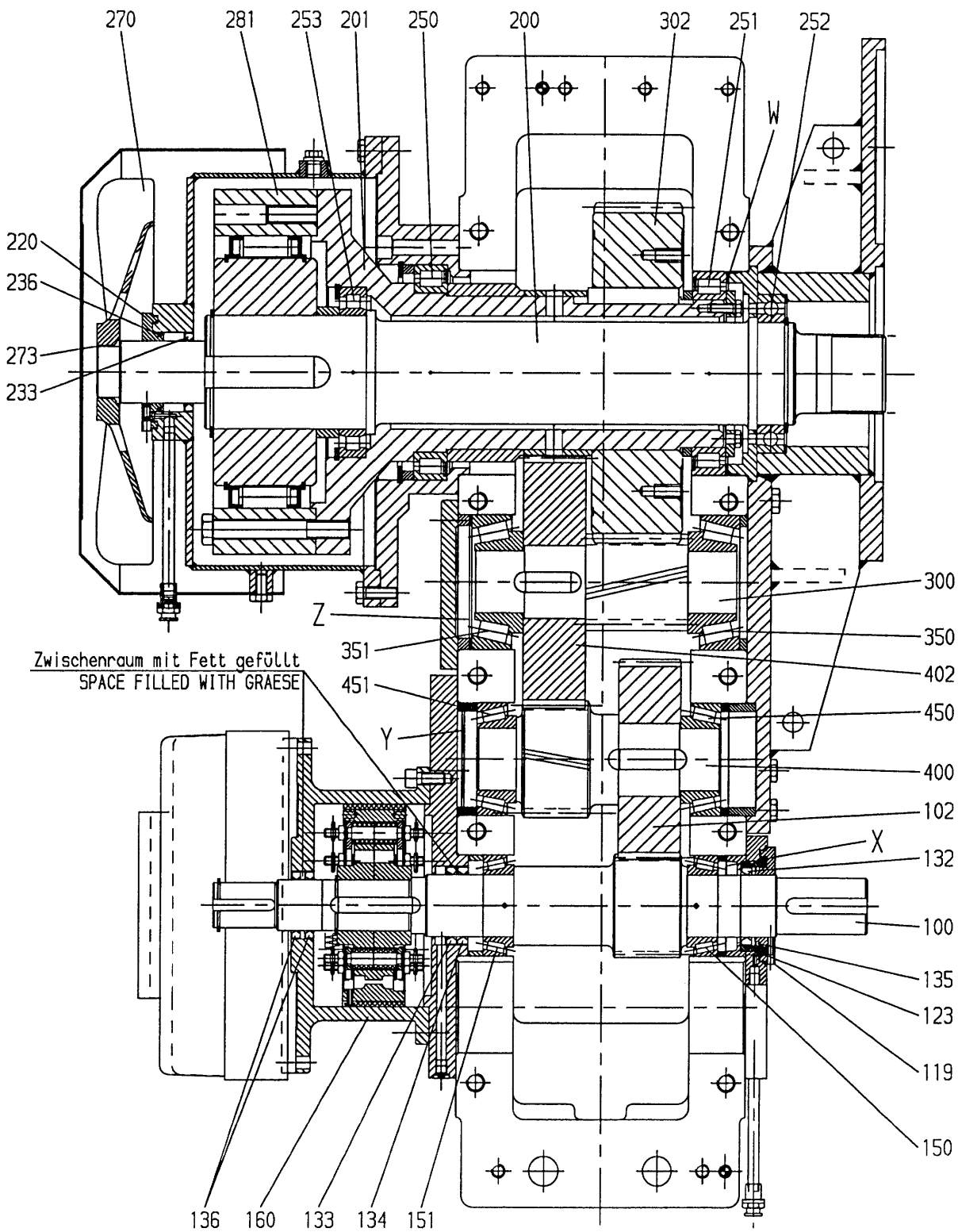

W,X,Y,Z = Paßscheibe / Shim

2005-08-02

FLENDER-Getriebwerk Penig GmbH, Thierbacher Str. 24, 09320 Penig, Tel. 037381/60, Telefax 0373816286	Datum / Date 2002-06-18	Name/Name Eichler	ZGE
		Y 6 008 616	a

Diese technische Unterlage hat gesetzlichen Schutz (DIN 34)

FLENDER	Ersatzteilliste (EL) Spare parts list	Bauart K3UF Type Größe 6,0 Size Übersetzung 28,608 ratio	Seite Page 1/2

Bei Korrespondenz bitte angeben
Please quote in correspondence **EL 4190294-200 DE/EN**

Hierzu gehört Zeichnungs-Nr.
Please refer to DWG No. **6008616**

	Teil-Nr. Part No.	Menge No. off		Benennung Description	Zeichnungs-Nr. Drawings No.	Material-Nr. Ident no.	Gw(kg) Weight
E	0100	1	ST	STRDWELLE D79,03X577 1.6587 PINION SHAFT D79,03X577 1.6587	6046354/A	000.001.260.094	10,8
E	0102	1	ST	STIRNRAD R 130,0/2,54 1.6587 GEAR WHEEL R 130,0/2,54 1.6587	5880842/B	000.000.560.842	10,2
E	0119	1	ST	RINGTRAEGER D98/55X17 C45 Ring carrier	8761311/A	026.787.613.118	0,5
E	0123	2	ST	O-RING OR0074 -03 W 5713 72NBR872 O-RING OR0074 -03 W 5713 72NBR872		000.000.243.323	0,0
E	0132	1	ST	WDR 055X070X08 BAUMSL W 5710 75FPM585 SHAFT SEAL 055X070X08 BAUMSL W 5710		000.000.306.052	0,0
E	0133	1	ST	WDR 055X070X08 BAUMSL W 5710 75FPM585 SHAFT SEAL 055X070X08 BAUMSL W 5710		000.000.306.052	0,0
E	0134	1	ST	WDR 55X70X10 BAUM W5710 75FKM585 SHAFT SEAL 55X70X10 BAUM W5710 75FKM585		002.900.076.606	0,0
E	0135	3	ST	RING,AS 070/03,1X0,82 W 5730 FED-ST LAMELLAR RING, AS (FEY) 070/03,1X0,82 W		000.000.347.199	0,1
E	0136	2	ST	WDR 42X62X8 BAUM 75FPM585 SHAFT SEAL 42X62X8 BAUM 75FPM585		000.050.027.652	0,1
E	0150	1	ST	WAELZL 33011 D 720 ST-KAEF ROLLING CONTACT BEARING 33011 D 720		000.000.777.665	0,7
E	0151	1	ST	WAELZL 33011 D 720 ST-KAEF ROLLING CONTACT BEARING 33011 D 720		000.000.777.665	0,7
E	0160	1	ST	TROMMEL-BREMS K3UF5/6 - FB180 C45N80 Brake drum	8762258/-	027.987.622.588	12,6
E	0200	1	ST	WELLE D109X803 34CRNIMO6 K3/K4 06 SHAFT D109X803 34CRNIMO6 K3/K4 06		000.001.255.247	41,8
E	0201	1	ST	WELLE-FLANSCH 322X0372 C60+N FLANGED SHAFT 322X0372 C60+N	8895938/A	000.000.695.938	35,1
E	0220	1	ST	RINGTRAEGER055X104,0X19 C45 RING CARRIER055X104,0X19 C45	5877840/-	000.000.677.840	0,6
E	0233	1	ST	WDR 055X070X08 BAUMSL W 5710 75FPM585 SHAFT SEAL 055X070X08 BAUMSL W 5710		000.000.306.052	0,0
E	0236	3	ST	RING,AS 070/03,1X0,82 W 5730 FED-ST LAMELLAR RING, AS (FEY) 070/03,1X0,82 W		000.000.347.199	0,1
E	0250	1	ST	WAELZL182928 SL ROLLING CONTACT BEARING182928 SL		000.000.379.145	2,6
E	0251	1	ST	WAELZL 182930 SL ROLLING CONTACT BEARING 182930 SL		000.050.003.926	3,8
E	0252	1	ST	WAELZL 6020 D 625 MET-KAEF ROLLING CONTACT BEARING 6020 D 625		000.000.380.620	1,4
E	0253	1	ST	WAELZL 1020 NU MA/C3 D 5412 MS-KAEF ROLLING CONTACT BEARING 1020 NU MA/C3 D		000.000.380.428	2,0
E	0270	1	ST	LUEFTER 340/ 45 AC45000 FAN 340/ 45 AC45000	5882387/E	000.000.562.387	1,5
E	0273	1	ST	RING-TOL BN0820-045-02 W 3372 FED-ST DISTANCE RING BN0820-045-02 W 3372		000.000.346.005	0,0

Die mit * gekennzeichneten Teile gehören zu einer Baugruppe (G). Die Baugruppe ist nur komplett auszutauschen.
The parts marked with * belong to a subassembly (G). The subassemblymust be replaced complete.

A. Friedr.Flender AG, D 46393 Bocholt,
Tel. +49(0)2871/92-0, Fax +49(0)2871/922596, http://www.flender.com

Datum Date	EICHLER, MARTIN PE-387
19.08.2005	Rev.:

FLENDER	Ersatzteilliste (EL) Spare parts list	Bauart K3UF Type Größe 6,0 Size Übersetzung 28,608 ratio	Seite Page 2/2

Bei Korrespondenz bitte angeben
Please quote in correspondence **EL 4190294-200 DE/EN**

Hierzu gehört Zeichnungs-Nr.
Please refer to DWG No. **6008616**

	Teil-Nr. Part No.	Menge No. off		Benennung Description	Zeichnungs-Nr. Drawings No.	Material-Nr. Ident no.	Gw(kg) Weight
E	0281	1	ST	RS FXM 200- 63SX/H100 W 5813 ST BACKSTOP FXM 200- 63SX/H100 W 5813 ST		000.000.389.016	52,0
E	0300	1	ST	STRDWELLE R 185,0/3,94 1.6587 PINION SHAFT R 185,0/3,94 1.6587	5875775/A	000.000.675.775	6,3
E	0302	1	ST	STIRNRAD L 220,0/4,89 1.6587 GEAR WHEEL L 220,0/4,89 1.6587	5875752/B	000.000.675.752	54,4
E	0350	1	ST	WAELZL 32311 B D 720 ST-KAEF ROLLING CONTACT BEARING 32311 B D 720		000.000.380.564	2,5
E	0351	1	ST	WAELZL 32311 B D 720 ST-KAEF ROLLING CONTACT BEARING 32311 B D 720		000.000.380.564	2,5
E	0400	1	ST	STRDWELLE L 157,0/2,31 1.6587 PINION SHAFT L 157,0/2,31 1.6587	5886512/-	000.000.666.512	7,5
E	0402	1	ST	STIRNRAD R 157,0/2,31 1.6587 GEAR WHEEL R 157,0/2,31 1.6587	5886513/-	000.000.666.513	14,5
E	0450	1	ST	WAELZL 33211 D 720 ST-KAEF ROLLING CONTACT BEARING 33211 D 720		000.000.379.174	1,2
E	0451	1	ST	WAELZL 33211 D 720 ST-KAEF ROLLING CONTACT BEARING 33211 D 720		000.000.379.174	1,2

A. Friedr.Flender AG, D 46393 Bocholt,
Tel. +49(0)2871/92-0, Fax +49(0)2871/922596, http://www.flender.com

Datum Date	EICHLER, MARTIN PE-387
19.08.2005	Rev.:

FLENDER	Ersatzteilliste (EL) Spare parts list	Bauart K3UF Type Größe 6,0 Size Übersetzung 28,608 ratio	Seite Page 1/2

Bei Korrespondenz bitte angeben
Please quote in correspondence **EL 4190294-220 DE/EN**

Hierzu gehört Zeichnungs-Nr.
Please refer to DWG No. **6008616**

	Teil-Nr. Part No.	Menge No. off		Benennung Description	Zeichnungs-Nr. Drawings No.	Material-Nr. Ident no.	Gw(kg) Weight
E	0100	1	ST	STRDWELLE D79,03X577 1.6587 PINION SHAFT D79,03X577 1.6587	6046354/A	000.001.260.094	10,8
E	0102	1	ST	STIRNRAD R 130,0/2,54 1.6587 GEAR WHEEL R 130,0/2,54 1.6587	5880842/B	000.000.560.842	10,2
E	0119	1	ST	RINGTRAEGER D98/55X17 C45 Ring carrier	8761311/A	026.787.613.118	0,5
E	0123	2	ST	O-RING OR0074 -03 W 5713 72NBR872 O-RING OR0074 -03 W 5713 72NBR872		000.000.243.323	0,0
E	0132	1	ST	WDR 055X070X08 BAUMSL W 5710 75FPM585 SHAFT SEAL 055X070X08 BAUMSL W 5710		000.000.306.052	0,0
E	0133	1	ST	WDR 055X070X08 BAUMSL W 5710 75FPM585 SHAFT SEAL 055X070X08 BAUMSL W 5710		000.000.306.052	0,0
E	0134	1	ST	WDR 55X70X10 BAUM W5710 75FKM585 SHAFT SEAL 55X70X10 BAUM W5710 75FKM585		002.900.076.606	0,0
E	0135	3	ST	RING,AS 070/03,1X0,82 W 5730 FED-ST LAMELLAR RING, AS (FEY) 070/03,1X0,82 W		000.000.347.199	0,1
E	0136	2	ST	WDR 42X62X8 BAUM 75FPM585 SHAFT SEAL 42X62X8 BAUM 75FPM585		000.050.027.652	0,1
E	0150	1	ST	WAELZL 33011 D 720 ST-KAEF ROLLING CONTACT BEARING 33011 D 720		000.000.777.665	0,7
E	0151	1	ST	WAELZL 33011 D 720 ST-KAEF ROLLING CONTACT BEARING 33011 D 720		000.000.777.665	0,7
E	0160	1	ST	TROMMEL-BREMS K3UF5/6 - FB180 C45N80 Brake drum	8762258/-	027.987.622.588	12,6
E	0200	1	ST	WELLE D109X803 34CRNIMO6 K3/K4 06 SHAFT D109X803 34CRNIMO6 K3/K4 06		000.001.255.247	41,8
E	0201	1	ST	WELLE-FLANSCH 322X0372 C60+N FLANGED SHAFT 322X0372 C60+N	8895938/A	000.000.695.938	35,1
E	0220	1	ST	RINGTRAEGER055X104,0X19 C45 RING CARRIER055X104,0X19 C45	5877840/-	000.000.677.840	0,6
E	0233	1	ST	WDR 055X070X08 BAUMSL W 5710 75FPM585 SHAFT SEAL 055X070X08 BAUMSL W 5710		000.000.306.052	0,0
E	0236	3	ST	RING,AS 070/03,1X0,82 W 5730 FED-ST LAMELLAR RING, AS (FEY) 070/03,1X0,82 W		000.000.347.199	0,1
E	0250	1	ST	WAELZL182928 SL ROLLING CONTACT BEARING182928 SL		000.000.379.145	2,6
E	0251	1	ST	WAELZL 182930 SL ROLLING CONTACT BEARING 182930 SL		000.050.003.926	3,8
E	0252	1	ST	WAELZL 6020 D 625 MET-KAEF ROLLING CONTACT BEARING 6020 D 625		000.000.380.620	1,4
E	0253	1	ST	WAELZL 1020 NU MA/C3 D 5412 MS-KAEF ROLLING CONTACT BEARING 1020 NU MA/C3 D		000.000.380.428	2,0
E	0270	1	ST	LUEFTER 340/ 45 AC45000 FAN 340/ 45 AC45000	5882387/E	000.000.562.387	1,5
E	0273	1	ST	RING-TOL BN0820-045-02 W 3372 FED-ST DISTANCE RING BN0820-045-02 W 3372		000.000.346.005	0,0

Die mit * gekennzeichneten Teile gehören zu einer Baugruppe (G). Die Baugruppe ist nur komplett auszutauschen.
The parts marked with * belong to a subassembly (G). The subassemblymust be replaced complete.

FLENDER	Ersatzteilliste (EL) Spare parts list	Bauart K3UF Type Größe 6,0 Size Übersetzung 28,608 ratio	Seite Page 2/2

Bei Korrespondenz bitte angeben
Please quote in correspondence **EL 4190294-220 DE/EN**

Hierzu gehört Zeichnungs-Nr.
Please refer to DWG No. **6008616**

	Teil-Nr. Part No.	Menge No. off		Benennung Description	Zeichnungs-Nr. Drawings No.	Material-Nr. Ident no.	Gw(kg) Weight
E	0281	1	ST	RS FXM 200- 63SX/H100 W 5813 ST BACKSTOP FXM 200- 63SX/H100 W 5813 ST		000.000.389.016	52,0
E	0300	1	ST	STRDWELLE R 185,0/3,94 1.6587 PINION SHAFT R 185,0/3,94 1.6587	5875775/A	000.000.675.775	6,3
E	0302	1	ST	STIRNRAD L 220,0/4,89 1.6587 GEAR WHEEL L 220,0/4,89 1.6587	5875752/B	000.000.675.752	54,4
E	0350	1	ST	WAELZL 32311 B D 720 ST-KAEF ROLLING CONTACT BEARING 32311 B D 720		000.000.380.564	2,5
E	0351	1	ST	WAELZL 32311 B D 720 ST-KAEF ROLLING CONTACT BEARING 32311 B D 720		000.000.380.564	2,5
E	0400	1	ST	STRDWELLE L 157,0/2,31 1.6587 PINION SHAFT L 157,0/2,31 1.6587	5886512/-	000.000.666.512	7,5
E	0402	1	ST	STIRNRAD R 157,0/2,31 1.6587 GEAR WHEEL R 157,0/2,31 1.6587	5886513/-	000.000.666.513	14,5
E	0450	1	ST	WAELZL 33211 D 720 ST-KAEF ROLLING CONTACT BEARING 33211 D 720		000.000.379.174	1,2
E	0451	1	ST	WAELZL 33211 D 720 ST-KAEF ROLLING CONTACT BEARING 33211 D 720		000.000.379.174	1,2

A. Friedr.Flender AG, D 46393 Bocholt,
Tel. +49(0)2871/92-0, Fax +49(0)2871/922596, http://www.flender.com

Datum Date	EICHLER, MARTIN PE-387
19.08.2005	Rev.:

Operating Instructions

BA 4600 EN 09.04

FLUDEX Couplings Type
FAO, FAD, FAE, FAM, FADB, FADS, FAK, FAKB and **FAR**
including configuration in accordance with 94/9/EC

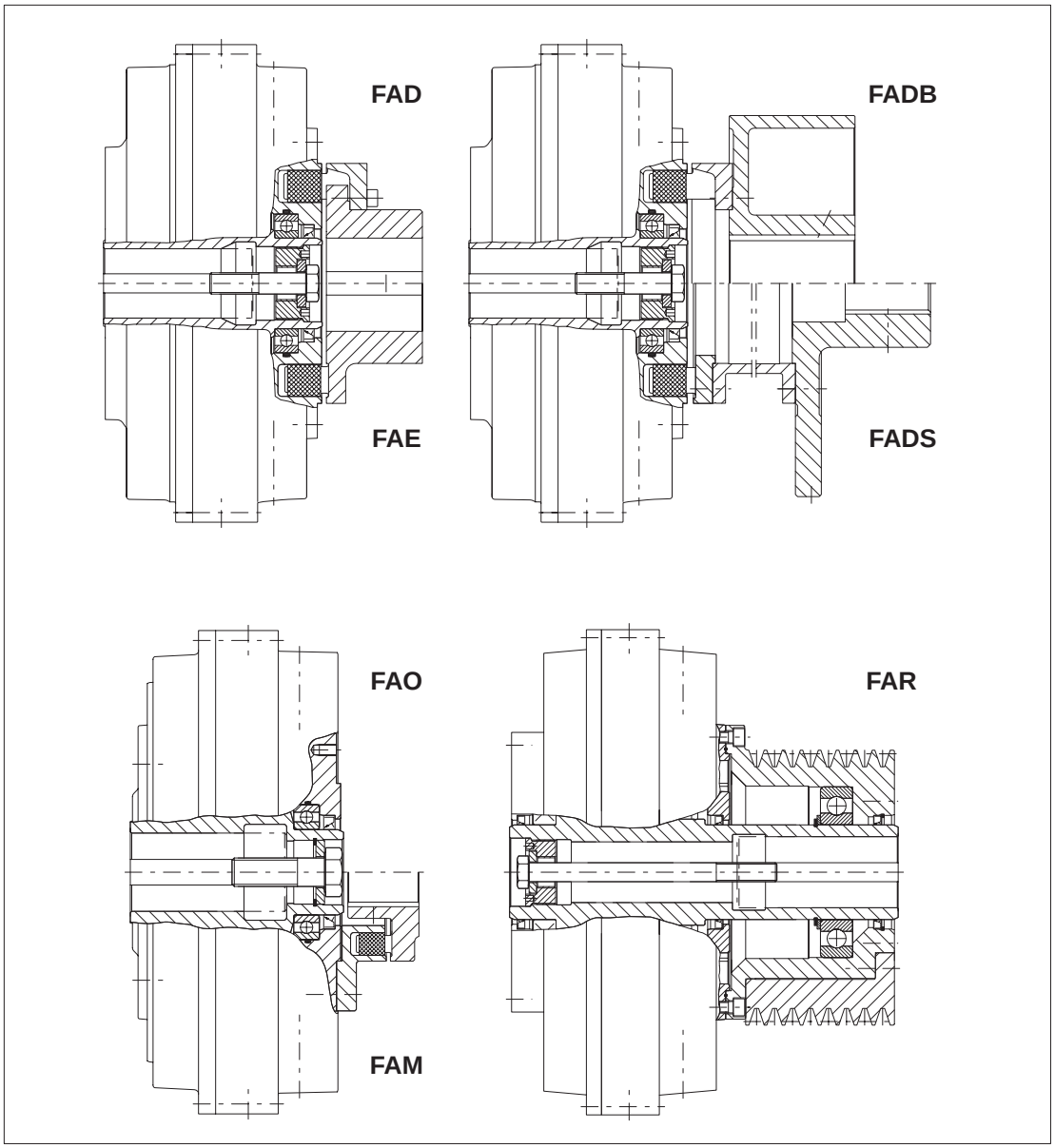

FLENDER
A. Friedr. Flender AG · 46393 Bocholt · Tel. 02871/92-0 · Telefax 02871/92-2596 · www.flender.com

Contents

1.	**Technical data**	**4**
1.1	General data	4
1.2	Data relating specifically to coupling	4
2.	**General notes**	**4**
2.1	Introduction	4
2.2	Copyright	4
3.	**Safety notes**	**5**
3.1	Proper use	5
3.2	Obligations of the user	5
3.3	Warnings and symbols used in these Instructions	5
4.	**Handling and storage**	**6**
4.1	Scope of supply	6
4.2	Handling	6
4.3	Storage of the coupling	6
4.4	Storage area for a protracted period	6
5.	**Technical description**	**7**
5.1	General description Type FA	7
5.2	Construction of couplings	7
5.3	Marking the coupling parts for explosion protection	8
5.4	Conditions of use for FLUDEX couplings in potentially explosive areas	9
6.	**Assembly**	**9**
6.1	Instructions for applying the finished bore and fitting the axial retaining means, set screws and balancing	9
6.1.1	Finished bore	9
6.1.2	Parallel keyway	11
6.1.3	Axial fastening	11
6.1.4	Set screws	12
6.1.5	Balancing	13
6.2	General information on installation	14
6.3	Mounting the coupling parts	14
6.4	Alignment	15
6.5	Possible misalignments	16
6.5.1	Axial misalignment	16
6.5.2	Angular misalignment	16
6.5.3	Radial misalignment	16
6.5.4	Permissible shaft misalignment values for radial misalignment $\Delta Kr_{perm.}$ and difference in gap dimension $\Delta S_{perm.}$	16
6.6	Assignment of tightening torques	17
7.	**Start-up**	**17**
7.1	Procedure before start-up	17
7.2	Fluid filling	17
7.2.1	Operating fluid: oil	19
7.2.2	Operating fluid: water/water emulsion	19
8.	**Operation**	**20**
8.1	General operating data	20
9.	**Faults, causes and remedy**	**20**
9.1	General	20
9.2	Possible faults	21
9.3	Incorrect use	21
9.3.1	Possible faults when selecting the coupling or coupling size	22
9.3.2	Possible faults when installing the coupling	22
9.3.3	Possible faults in maintenance	23

10. Maintenance and repair 23
10.1 Changing the operating fluid 23
10.2 Changing the shaft sealing rings 24
10.3 Maintenance interval of the N-EUPEX add-on coupling 24
10.4 Replacement of the flexible elements 24
10.5 Demounting the FLUDEX coupling 25
10.5.1 Demounting sizes 222-342 25
10.5.2 Demounting sizes 395-590 26
10.6 Demounting the FLUDEX-coupling 27
10.7 Reassembling the FLUDEX coupling 27
10.8 Refitting the FLUDEX coupling 27
10.9 Filling quantities for FLUDEX FA couplings size 297, 395 and 516 28
10.10 Filling quantities for FLUDEX FA couplings size 222, 342, 450 and 590 29

11. Spare parts, customer-service addresses 30
11.1 Spare-part and customer service addresses 30
11.2 Spare parts list Types FAO, FAK, FAD, FAE, FAM, FADB, FADS 31
11.3 Spare parts list, type FAR 32

12. Declaration by the manufacturer / Declaration of Conformity 37

1. Technical data

1.1 General data

These Operating Instructions (BA) apply generally to FLUDEX couplings of the FA.. type.

1.2 Data relating specifically to coupling

The order-specific data relating to a delivery are, if known in case of an order, listed on the title page. In this case this title page diverges from that stored on the Internet. The contents of the operating instructions are, however, in this case identical.

The supply order number serves as the coupling's ident number. This number appears on the coupling in light raised relief.

2. General notes

2.1 Introduction

These Operating Instructions (BA) are an integral part of the coupling delivery and must be kept in its vicinity for reference at all times.

Caution! **All persons involved in the installation, operation, maintenance and repair of the coupling must have read and understood these Operating Instructions and must comply with them at all times. We accept no responsibility for damage or disruption caused by disregard of these Instructions.**

The **"Coupling"** described in these Operating Instructions (BA) has been developed for stationary use in general engineering applications.

The coupling is designed only for the application described in section 1, "Technical data". Other operating conditions must be contractually agreed.

The coupling described in these Instructions reflects the state of technical development at the time these Instructions went to print.

In the interest of technical progress we reserve the right to make changes to the individual assemblies and accessories which we regard as necessary to preserve their essential characteristics and improve their efficiency and safety.

2.2 Copyright

The copyright to these Operating Instructions (BA) is held by **FLENDER AG.**

These Operating Instructions (BA) must not be wholly or partly reproduced for competitive purposes, used in any unauthorised way or made available to third parties without our agreement.

Technical enquiries should be addressed to the following works

FLENDER AG Telefon: 02871/92-2868
D 46393 Bocholt Telefax: 02871/92-2579

or to one of our customer-service addresses. A list of our customer-service addresses is given in section 11, "Spare parts, customer-service addresses".

3. Safety notes

3.1 Proper use

- The coupling has been manufactured in accordance with the state of the art and is delivered in a condition for safe and reliable use. Any changes on the part of the user which may affect safety and reliability are prohibited. This applies equally to safety features designed to prevent accidental contact.
- The coupling must be used and operated strictly in accordance with the conditions laid down in the contract governing performance and supply.

3.2 Obligations of the user

- The operator must ensure that all persons involved in installation, operation, maintenance and repair have read and understood these Operating Instructions (BA) and comply with them at all times in order to:

  – avoid injury or damage,

  – ensure the safety and reliability of the coupling,

  and

  – avoid disruptions and environmental damage through incorrect use.
- During transport, assembly, installation, dismantling, operation and maintenance of the unit, the relevant safety and environmental regulations must be complied with at all times.
- The housing of the FLUDEX coupling is made of aluminium (AC-Al-Si10Mg). Depending on the individual case, if necessary, further requirements must be taken into account when handling aluminium.
- The coupling must be operated, maintained or repaired only by authorised, duly trained and qualified personnel.
- All work must be carried out with great care and with due regard to safety.
- All work on the gear unit must be carried out only when it is at a standstill.
  The drive unit must be secured against being switched on accidentally (e.g. by locking the key switch or removing the fuses from the power supply). A notice should be attached to the ON switch stating clearly that work is in progress.
- The coupling must be fitted with suitable safeguards to prevent accidental contact. This fixture must also offer protection against spurting hot operating fluid without substantially impairing the coupling ventilation. The fusible safety plugs and filling plugs should remain accessible.
- The use of suitable operating fluids (usually oil) is necessary for the operation of the coupling. The instructions for use enclosed by the operating fluid manufacturer must be observed.
- The drive unit must be shut down as soon as changes to the coupling are detected during operation.
- If the coupling is intended for installation in plant or equipment, the manufacturer of such plant or equipment must ensure that the contents of the present Operating Instructions are incorporated in his own instructions.
- All spare parts must be obtained from FLENDER.

3.3 Warnings and symbols used in these Instructions

This symbol indicates safety measures which must be observed with regard to **explosion protection.**

This symbol indicates safety measures which must be observed to avoid **personal injury.**

Caution! This symbol indicates safety measures which must be observed to avoid **damaging the coupling.**

Note: This symbol indicates general **operating instructions** which are of particular importance.

4. Handling and storage

4.1 Scope of supply

The products supplied are listed in the despatch papers. Check immediately on receipt to ensure that all the products listed have actually been delivered. Parts damaged during transport or missing parts must be reported in writing immediately.

The equipment is delivered ready for operation, depending upon an order with or without fluid filling. Couplings filled with operating medium are marked by a corresponding label ("...L, HLP 32 DIN 51524/2, operating oil already put in") in the vicinity of the filling hole. Delivered separately with every coupling is a fusible safety plug (depending on design also a thermal circuit breaker) with sealing rings, a locking plate and a retaining screw, if provided for.

The coupling in design in accordance with the guideline 94/9/EC is provided with the CE identification mark as described in section 5.

4.2 Handling

⚠ **When handling FLENDER products, use only lifting and handling equipment of sufficient load-bearing capacity!**

Note: The coupling must be transported using suitable transport equipment only.

Different forms of packaging may be used depending on the size of the coupling and method of transport. Unless otherwise agreed, the packaging complies with the **HPE Packaging Guidelines.**

The symbols marked on the packaging must be observed at all times. These have the following meanings:

bild-transport

This way up	Fragile	Keep dry	Keep cool	Centre of gravity	Use no hand hook	Attach here

4.3 Storage of the coupling

Unless otherwise expressly agreed, the coupling is delivered in a preserved condition and can be stored in a covered, dry place for up to 3 months. If storage is provided for a protracted period, the unit should be treated with a long-term preservative agent on all outer surfaces with the exception of the aluminium housing (FLENDER must be consulted).

Caution! **Before cleaning the coupling and applying the long-term preservative agent, the flexible elements of the N-EUPEX add-on coupling must be removed. The shaft sealing rings must not come into contact with solvents.**

Correctly stored couplings retain their properties unchanged for up to five years. Unfavourable storage conditions and improper treatment of the flexible elements and/or seals will negatively affect their physical properties. Such negative effects may be caused by e.g. the action of oxygen, ozone, extreme temperatures, light, moisture, or solvents.

4.4 Storage area for a protracted period

The storage area must be dry and free from dust. The couplings must not be stored with chemicals, solvents, motor fuels, acids, etc. Furthermore, the flexible elements and seals should be protected against light, in particular direct sunlight and bright artificial light with a high ultraviolet content.

Caution! **The storage areas must not contain any ozone-generating equipment, e.g. fluorescent light sources, mercury vapour lamps, high-voltage electrical equipment. Damp storage areas are unsuitable. Ensure that no condensation occurs. The most favourable atmospheric humidity is below 65 %.**

5. Technical description

5.1 General description Type FA

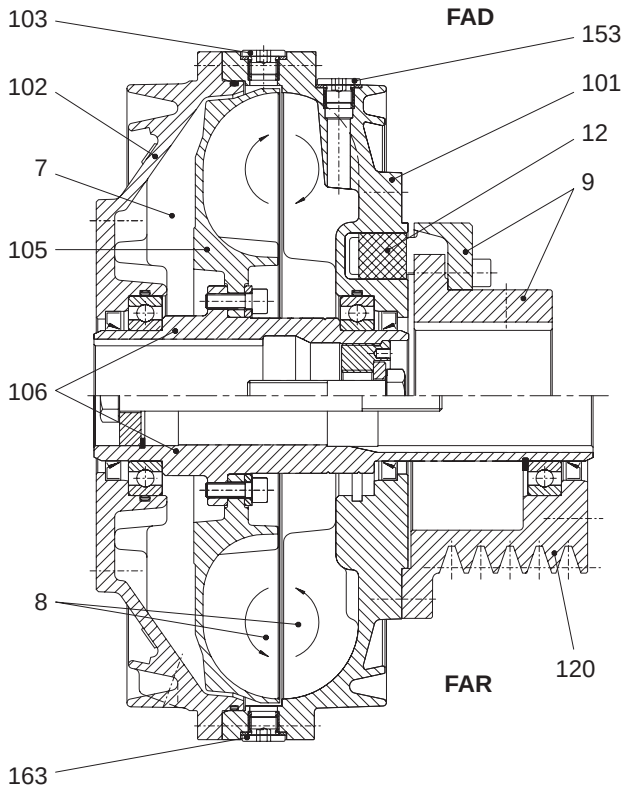

7	Compensating chamber
8	Working chamber
9	N-EUPEX add-on coupling
12	Flexible element (N-EUPEX)
101	Blade shell (outer gear)
102	Cover
103	Fusible safety plug
105	Blade wheel (inner wheel)
106	Hollow shaft
120	V-belt pulley
153	Filling plug
163	Screw plug

The FLUDEX coupling is a hydrodynamic fluid coupling working on the Föttinger principle. The coupling parts on the in- and output side are not connected to one other mechanically. The torque is transmitted by the fluid flowing in the coupling and conducted via radial blades. During sustained operation very low rotary speed slip occurs.

FLUDEX couplings of the FA.. series are sutiable for both directions of rotation. They can be mounted in a horizontal, angled or vertical position. The drive should preferably take place via the hollow shaft (106) and the blade wheel (105) to enable the advantages of the compensating chamber (7) and the working chamber geometry to be utilised.

If locked or overloaded by the driven machine, the coupling heats up until the fusing temperature of the safety fuse is reached.
When the safety fuse fuses, the operating fluid escapes and the drive motor is disconnected from the driven machine. To prevent the operating fluid spurting out, electronically or mechanically controlled thermal monitoring equipment (see separate opersting instructions) can be used.

5.2 Construction of couplings

FLUDEX couplings are made up of a few, robust parts.

The inner rotor includes the hollow shaft (106), on which the blade wheel (105) is mounted. The outer housing comprises the cover (102) and the blade shell (101), which are connected via a flanged screw connection.
The outer housing and the inner rotor are double-mounted one inside the other and sealed towards the outside by shaft sealing rings.

For filling the coupling, two filling plugs (153) are located in filling channels offset by 180 ° (to prevent overfilling). For this a screw plug (163), offset on the periphery (by approx. 60°), to be used for ventilation while filling, for checking the filling level and for draining off the operating fluid, is located in the coupling flange. Opposite it is the fusible safety plug (103).

In the standard design the fusing temperature of the fusible safety screw is 135°, and the material used for the seals is Perbunan (for a max. sustained operating temperature of 85 °C). As an extended standard (for sustained operating temperatures of up to 110 °C and/or synthetic oil), the coupling can be fitted with seals made of Viton. In this case a fusible safety plug with a fusing temperature of 160 °C is used in the coupling.

Couplings to be used in potentially explosive areas are designed with the fusible safety plugs (103) permitted for the temperature class.

The fusing temperature of the fusible safety plugs is stamped on their end faces, the **135 °C plugs also being marked red**, the **160 °C plugs green**.

For applications where frequent faults or locking of the drive may occur it is recommended that a thermal monitoring system be provided. This will prevent the operating fluid from escaping and being lost and the environment from being polluted and endangered. The transmitter (EOC system) or thermal circuit breaker (mechanical switching equipment) is screwed into the coupling flange in place of the screw plug (163). The fusible safety plug (103) remains in the coupling as an emergency safety device.

A thermal circuit breaker with a fusing temperature of 110 °C can be used on a coupling with Perbunan seals and a 135 °C fusible safety plug.

A thermal circuit breaker with a fusing temperature of 140 °C can be used on a coupling with Viton seals and a 160 °C fusible safety plug.

A 160 °C fusible safety plug can be used with an EOC system (transmitter release temperature of 125 °C), including with Perbunan seals.

The type **FAO** includes only the components of the fluid coupling (without attachment) and incorporates a connection flange point on the output side. The types **FAK/FAD/FAE/FAM** are couplings with N-EUPEX add-on coupling integrated on the output side for connecting two shafts. The types **FAKB/FADB** are FAK/FAD couplings with a brake drum. The type **FADS** is a FAD coupling with brake disk. The type **FAR** is a coupling with V-belt pulley on the output side.

In the flexible N-EUPEX add-on coupling the H-shaped Perbunan flexible elements are delivered in a standard Shore hardness of 80.

Coupling with worn flexible elements (12) (for wear mark ΔS_V, see section 10) must not be operated in potentially explosive areas.

5.3 Marking the coupling parts for explosion protection

Note: Couplings which are intended for use in potentially explosive areas must bear the following markings:

FLENDER AG	CE Ex II 2 G c T3 D160 °C II B
D 46393 Bocholt	- 30 °C ≤ T_a ≤ +50 °C
FLUDEX coupling - year of construction	CE Ex I M2
Marking of the fusible safety plug:	Ex T3

The N-EUPEX add-on coupling must have Ex stamped on the hub parts.

5.4 Conditions of use for FLUDEX couplings in potentially explosive areas

The coupling with fusible safety plug with indication Ex T3 is suited for the service conditions specified in Guideline 94/9/EC:

- Equipment group II (use above ground) temperature class T3 of category 2 and 3 for areas where there are explosible gas, vapour, mist, air mixtures as well as for areas where dust can form explosible atmospheres.
- Equipment group I (underground applications) of the category M2

Ex **If it is to be used below ground in potentially explosive areas, the coupling, which is made of aluminium, must be provided with a robust casing to preclude the risk of ignition from e.g. friction, impact or friction sparks.**
The depositing of heavy metal oxides (rust) on the coupling housing must be precluded by the casing or other suitable precautions.

Ex **The FLUDEX coupling can be delivered with attached brake disk or V-belt pulley.**
The supplier of the subassembly is responsible for the construction of the belt drive or brake disk in conformity to the guidelines. To be noted are, amongst other things, hazards from electrostatic charging and hot surfaces.
According to BGR 132 the use of V-belts in conjunction with IIC gases is not permitted.

6. Assembly

The FLUDEX coupling is delivered exclusively with a finish-bored and grooved hollow shaft (106).

At the customer's express request FLENDER also delivers unbored or prebored coupling parts for the N-EUPEX add-on coupling.

The necessary refinishing must be carried out in strict compliance with the following specifications and with particular care!

Caution! **Responsibility for carrying out the refinishing is borne by the orderer.**
FLENDER can accept no guarantee claims arising from unsatisfactory refinishing!

Ex **Couplings with CE marking for use in potentially explosive areas are delivered exclusively with finish-bored hubs.**

6.1 Instructions for applying the finished bore and fitting the axial retaining means, set screws and balancing

6.1.1 Finished bore

- On part 1: Remove flexible elements
- Remove preservative from coupling parts.

⚠ **Note manufacturer's instructions for handling solvent.**

When machining the finished bore the parts must be carefully aligned. For the permissible radial and axial runout errors and the permissible cylindricity tolerances, refer to DIN ISO 286. The parts must be mounted on the marked faces (⌐).

⚠ **In the case of part 2/3, part 4 and part 9 great caution is necessary owing to the rotating cams.**

Caution! **The maximum permissible bore diameters (see table 6.1.1 a) are designed for drive-type fastenings without taper action to DIN 6885/1 and must not under any circumstances be exceeded. The finish-machined bores must be 100 % checked with suitable measuring equipment.**

If other shaft - hub connections (e.g. taper or stepped bore, etc.) are to be used instead of the flanged sleeve connections provided for, FLENDER must be consulted.
Flanged sleeve connections with taper action are not permissible.

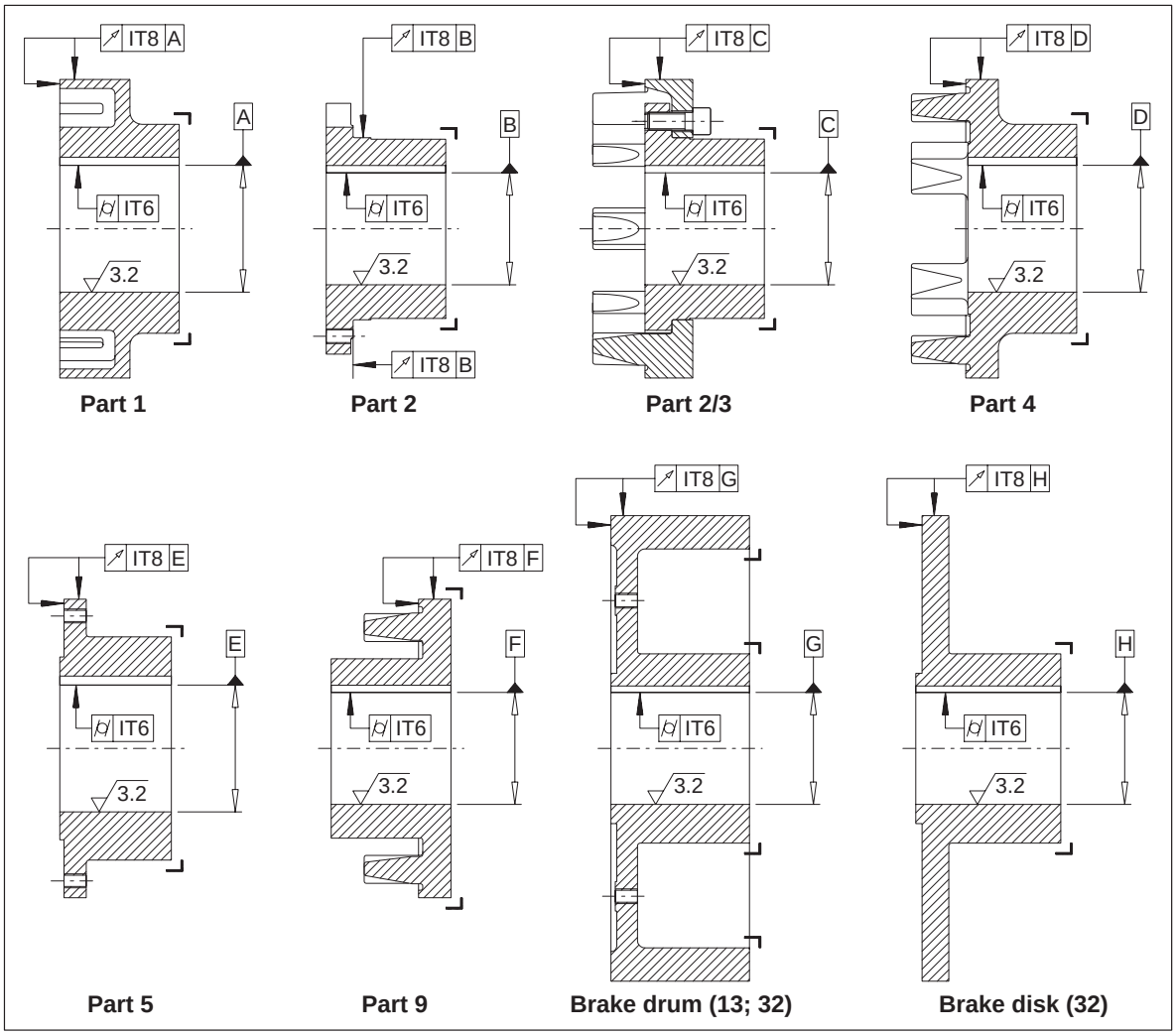

FLUDEX Size	N-EUPEX Size	max. bore D_1						
		Part 1	Part 2 Part 2/3	Part 4	Part 5	Part 9	Brake drum (13; 32)	Brake disk (32)
222	**110**	–	38	48	42	38	38	42
297	**125**	55	45	55	60	48	55	60
342	**140**	60	50	60	70	52	60	70
395	**225**	–	85	90	80	–	80	80
450	**250**	–	95	100	90	–	80	90
516	**315**	–	120	–	100	–	100	100
590	**315**	–	120	–	100	–	110	100

Table 6.1.1 a : max. bores of the N-EUPEX add-on coupling

For drive by means of parallel keys the following fit pairs are prescribed for the bores:

Selection of fit	Bore D_1 over mm	Bore D_1 to mm	Shaft tolerances	Bore tolerances
Shaft tolerances to FLENDER standard		25	k6	H7
	25	100	m6	
	100		n6	
Shaft tolerances to DIN 748/1		50	k6	H7
	50		m6	
System standard shaft		50	h6	K7
	50			M7
	all		h8	N7

Table 6.1.1 b : Fit pairs

Caution! **The assigned fits must be adhered to in order, on the one hand, to keep the play in the shaft-hub connection as low as possible, depending on utilisation of the tolerance zones, or, on the other, to keep the hub tension arising from the oversize within the permissible load limit. Failure to adhere to the fits may impair the shaft-hub connection.**
If the tolerance values of the shafts deviate from those in table 6.1.1 b above, FLENDER must be consulted.

Failure to observe these instructions may result in breakage of the coupling. Danger from flying fragments!
The coupling then becomes an explosion hazard.

6.1.2 Parallel keyway

The parallel keyways must be designed in accordance with DIN 6885/1. If the keyway geometry deviates, FLENDER must be consulted. Taper keys or nose keys (gib headed keys) are not permissible.

The parallel keyways must be designed to suit the available parallel keys. For parallel keyways the tolerance zone of the hub keyway width **ISO JS 9** must be adhered to.

Caution! **The parallel keyway must be applied as shown in the illustration.**

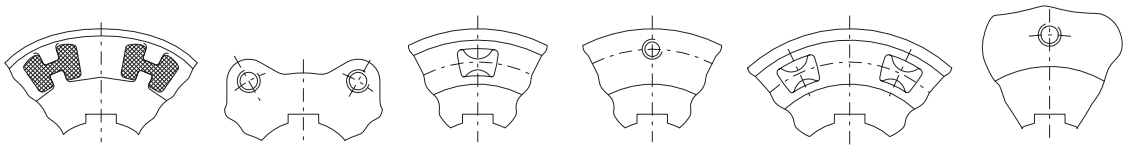

6.1.3 Axial fastening

The hollow shaft (106) of the FLUDEX coupling is secured axially with a locking plate (140) and retaining screw (141) (included in delivery) (for tightening torques, see table 6.1.3).

Retaining screw thread	M6	M8	M10	M12	M16	M20	M24	M30
Tightening torque [Nm]	10	25	49	86	160	300	500	800

Table 6.1.3: Tightening torques of the retaining screws

A set screw or end plate must be provided to secure the N-EUPEX add-on coupling axially. If end plates are used, FLENDER must be consulted with regard to machining the recesses in the coupling parts.

6.1.4 Set screws

Hexagon socket set screws with cup points to DIN 916 must be used for set screws.

The following guidelines must be observed!

The length of the set screw must be selected so that it fills the threaded hole, but does not project from the hub ($L_{min} = d_1 \times 1.2$).

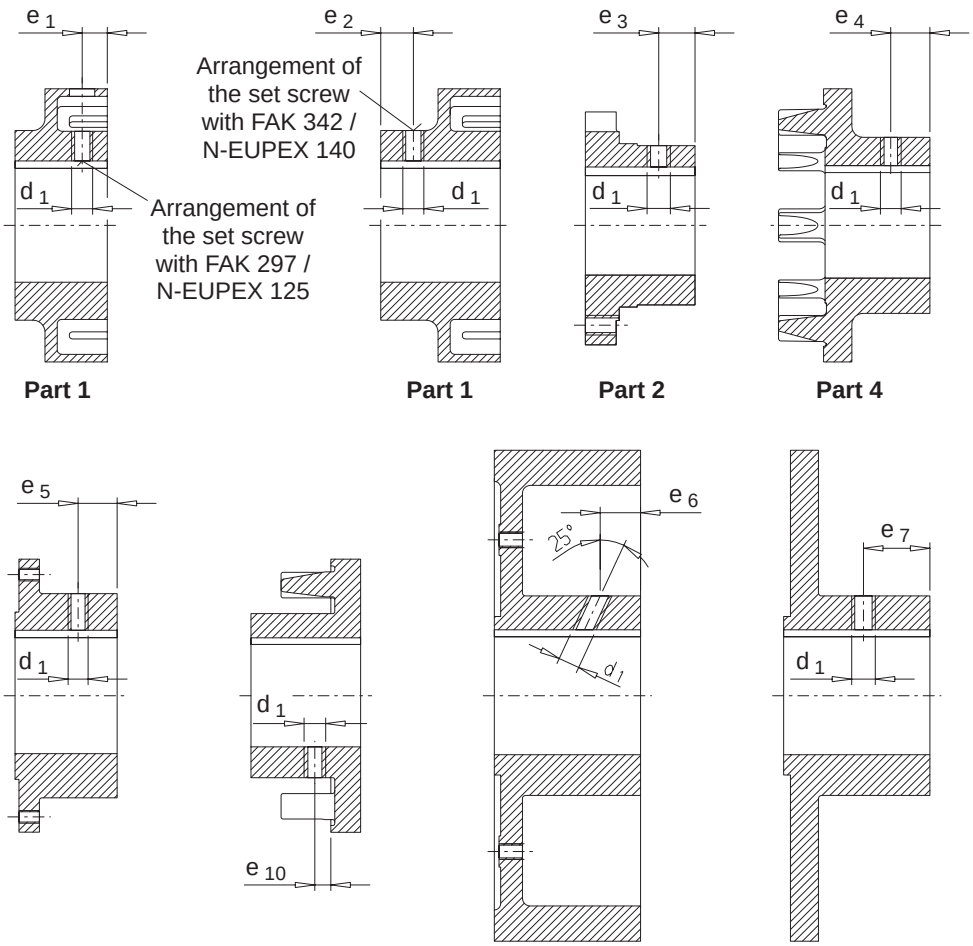

FLUDEX Size	N-EUPEX Size	d_1	e_1	e_2	e_3	e_4	e_5	e_6	e_7	e_{10}	Tightening torque of the set screws [Nm]
222	**110**	M 6	–	–	*9	18	25	12	25	9	4
297	**125**	M 8	20	–	12	20	25	12	40	12	8
342	**140**	M 8	–	13	15	22	30	12	40	15	8
395	**225**	M12	–	–	35	40	50	25	60	–	25
450	**250**	M16	–	–	40	45	55	25	85	–	70
516	**315**	M16	–	–	50	–	65	30	85	–	70
590	**315**	M16	–	–	50	–	65	30	85	–	70

Table 6.1.4 a : Set screw assignment and tightening torques of the set screws

*) Note following position of the set screw!

Caution! **The set screws must always be positioned on the keyway. An exception are the following coupling parts:**

Part 2: Size 110: Bore $D_1 \geq 30$ mm set screw displaced by 180° relative to the keyway.

Part 9: all sizes: Set screw displaced approx. 180° relative to the keyway, arranged between the cams.

6.1.5 Balancing

FLUDEX couplings are delivered balanced.

Prebored N-EUPEX add-on couplings are delivered unbalanced. It is recommended that these parts are balanced to suit the application after finish-boring (see DIN ISO 1940 and DIN 740/2), but to min. balancing quality G16.

Balancing is normally done by drilling material away.

If one-level balancing is required on brake disk / brake drum (13; 32), the material on the front end at the disk's bottom is to be removed. When two-level balancing the brake disk / brake drum (13; 32) should be balanced together with part 10 or part 3.

Caution!

With one-level balancing, on part 1 material must be removed from between the webs, the bottom must however not be drilled right through.
On part 4 and part 9 the material must be removed from the end face between the cams. Sufficient space must be left between the balancing hole and the cam to avoid weakening the cam connection.
On part 13 / 32 the brake surface must not under any circumstances be damaged.

Since the coupling part 3, the cam part is always in a balanced condition, the coupling part 2 can be balanced individually or together with the fitted part 3.

Finish-bored couplings or coupling parts are balanced according to the customer's specifications.

Arrangement of the balancing bore with one-level balancing

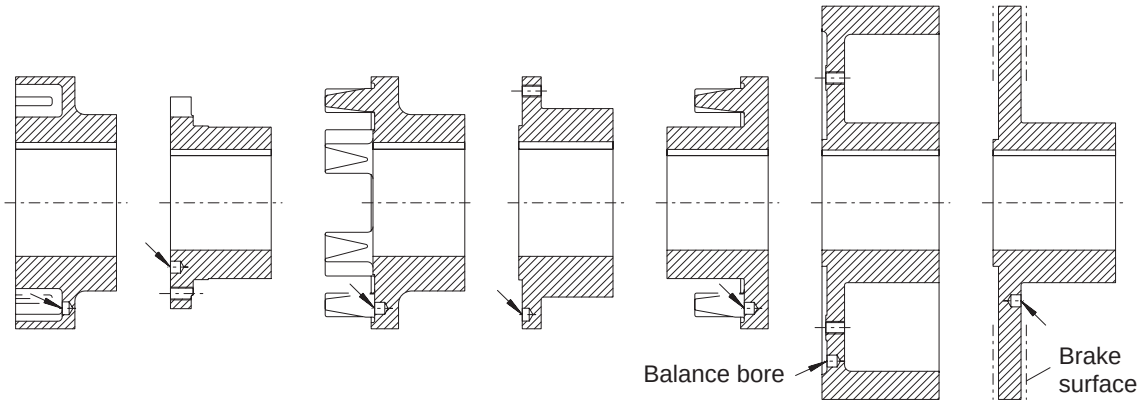

Part 1	Part 2	Part 4	Part 5	Part 9	Brake drum (13; 32)	Brake disk (32)

Arrangement of the balancing bore with two-level balancing

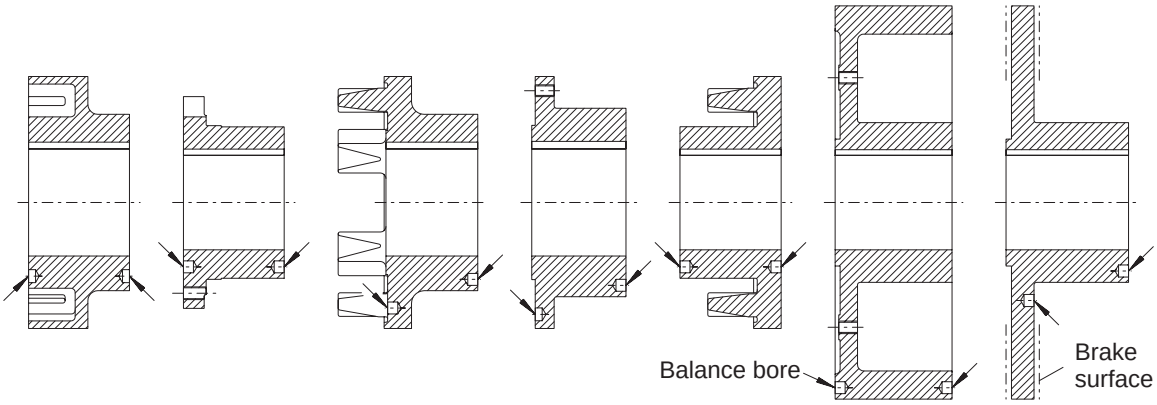

Part 1	Part 2	Part 4	Part 5	Part 9	Brake drum (13; 32)	Brake disk (32)

6.2 General information on installation

During assembly, the ”Safety Instructions” in Section 3 must be observed.

Assembly and installation work must be done with great care by trained and qualified personnel.

As early as during the planning phase it must be ensured that sufficient space is available for installation and subsequent care and maintenance work.

Adequate lifting equipment must be available before beginning the installation and assembly work.

If lacquered couplings are used in potentially explosive areas, the requirements made of the conductivity of the lacquer and the limitation on the thickness of the lacquer applied must be observed in accordance with EN 13463-1. Where lacquer coatings have a thickness less than 200 µm, no electrostatic charge is to be expected. Where lacquer coatings are thicker than 200 µm, an electrostatic charge must be avoided, e.g. by cleaning the coupling.

6.3 Mounting the coupling parts

Before beginning installation, the shaft ends, the brake disk, the flange surfaces, and the coupling parts must be carefully cleaned and the shaft ends rubbed with a lubricant. Before cleaning the N-EUPEX coupling parts with solvent the flexible elements must be removed.

Note manufacturer’s instructions for handling solvent.

Caution! **The coupling components and the brake disk should be fitted with the aid of suitable equipment to avoid possible damage to the shaft bearings through axial joining forces.**
Always use suitable lifting equipment.

The FLUDEX coupling must be pulled on by means of a locking plate (140) and a spindle, as shown in the picture. The coupling must be pulled on until it rests against the shaft shoulder.

Caution! **Under no circumstances must pulling on forces be applied through the coupling housing.**

After being pulling on the FLUDEX coupling must be secured axially by means of a locking plate (140) and a retaining screw (141) (see item 6.1.3).

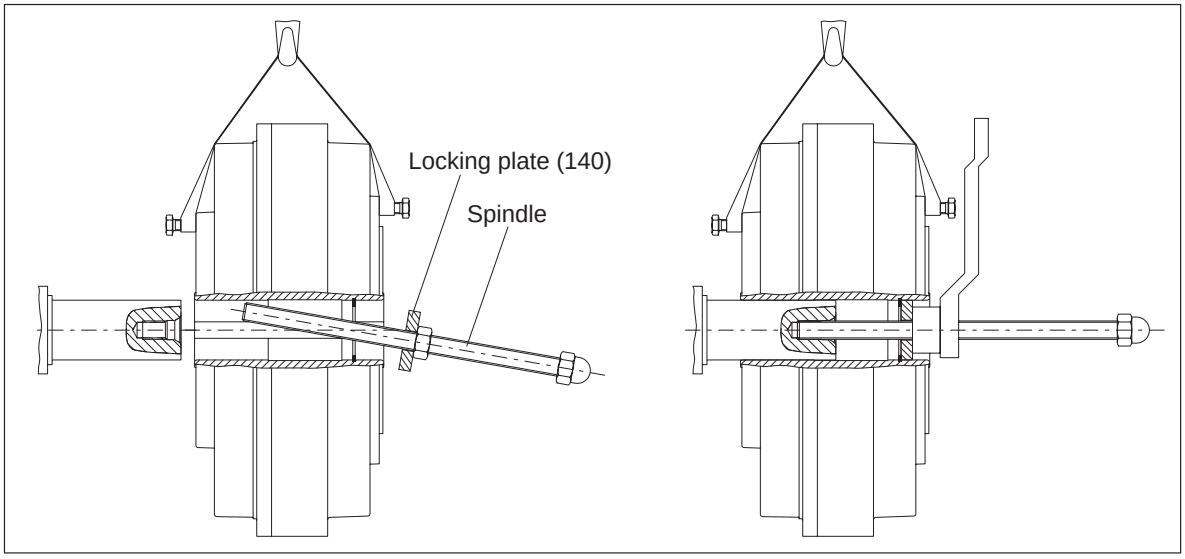

If necessary, heating the brake disk and the N-EUPEX coupling hubs (to max. + 150 °C) will facilitate fitting. With temperatures over + 80 °C the flexible elements must be removed from the coupling part 1 before heating. Before fitting coupling part 2 the part 3 must be located on the shaft.

Take precautions to avoid burns from hot components!

The N-EUPEX add-on coupling must be mounted using the entire length of the bore or until it comes into contact with the shaft shoulder. Axial securing is effected by means of the set screw or end plate.

Caution! **Tightening the set screws to a tightening torque in accordance with item 6.1.4.**

Failure to observe these instructions may result in breakage of the coupling.
Danger from flying fragments!
The coupling then becomes an explosion hazard.

Remount the removed flexible elements. It must be ensured that the flexible elements are of identical size and have identical markings. The coupling parts must be only at a maximum temperature of + 80 °C.

Move together the machines to be coupled.

Danger of squeezing!

Dimension S must be adhered to. The tightening torques of the bolted connections of part 2/3, part 10, and part 32 is to be checked (for tightening torques and distance dimension S see item 6.6 and section 1).

Caution! **If the FLUDEX coupling is screwed to components which conduct axial forces or bending moments into the coupling, FLENDER must be consulted.**

6.4 Alignment

FLUDEX couplings in combination with the flexible N-EUPEX add-on coupling absorb positional deviations of the shaft ends to be connected up to the values shown in item 6.5.
When aligning, the radial and angular misalignment of the shaft ends must be kept as small as possible, because, other conditions being equal, this increases the service life of the flexible elements.

The alignment must be checked once more with the foundation bolts of the motor and gear unit/driven machine tightened.
Any shaft misalignment through heating during operation must be taken into account as far as possible.

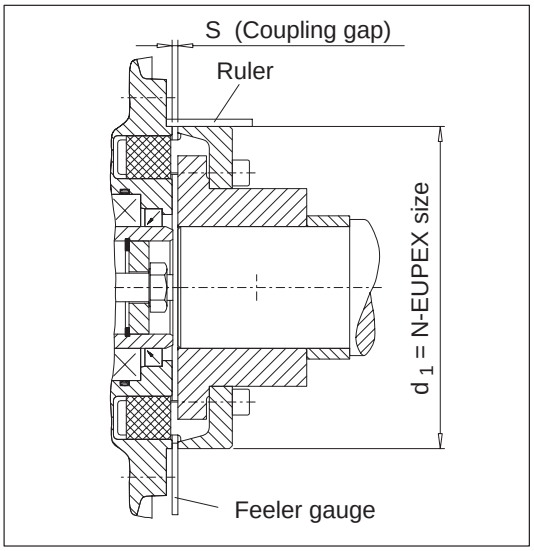

6.5 Possible misalignments

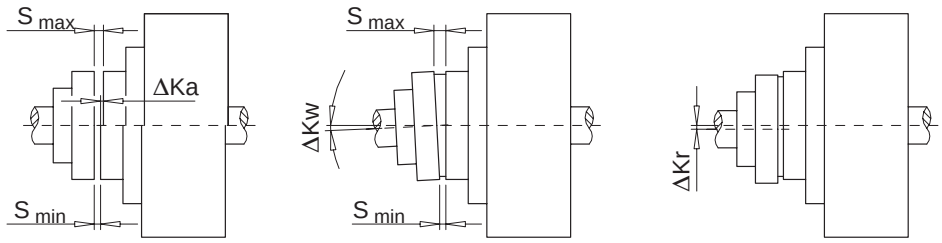

Axialer misalignment Fig. 6.5.1 | Angular misalignment Fig. 6.5.2 | Radial misalignment Fig. 6.5.3

Misalignments of the coupling parts in relation to each other can be caused by inaccurate alignment during assembly, but also by actual operation of the equipment (expansion due to heat, shaft deflection, insufficiently rigid machine frames, etc.).

Caution! **The following maximum permissible misalignments must by no means be exceeded during operation.**

6.5.1 Axial misalignment

Axial misalignment ΔKa (Fig. 6.5.1) of the coupling parts relative to one another is possible within the ”permissible error” for dimension S (see title page).

6.5.2 Angular misalignment

The angular misalignment ΔKw (Fig. 6.5.2) can usefully be measured as the difference in the gap dimension ($\Delta S = S_{max} - S_{min}$). For the permissible values for the difference in the gap dimension, refer to item 6.5.4.

If required, the permissible angular misalignment ΔKw can be calculated as follows:

$$\Delta Kw_{perm.} \text{ in rad} = \frac{\Delta S_{perm.}}{d_1}$$

$$\Delta Kw_{perm.} \text{ in degr.} = \frac{180}{\pi} \times \frac{\Delta S_{perm.}}{d_1}$$

for $\Delta S_{perm.}$ see item 6.5.4

d_1 corresponds to N-EUPEX size in mm

6.5.3 Radial misalignment

For the permissible radial misalignment $\Delta Kr_{perm.}$ (Fig. 6.5.3) - depending upon the operating speed -, refer to item 6.5.4.

6.5.4 Permissible shaft misalignment values for radial misalignment $\Delta Kr_{perm.}$ and difference in gap dimension $\Delta S_{perm.}$

Values given in mm, rounded off

FLUDEX	N-EUPEX	Coupling speed in 1/min								
Size	**Size**	250	500	750	1000	1500	2000	3000	4000	5000
222	**110**	0.5	0.35	0.3	0.25	0.2	0.2	0.15	0.1	0.1
297	**125**	0.5	0.4	0.3	0.25	0.25	0.2	0.15	0.15	0.1
342	**140**	0.6	0.4	0.35	0.3	0.25	0.2	0.2	0.15	
395	**225**	0.8	0.55	0.5	0.4	0.35	0.3	0.25		
450	**250**	0.8	0.6	0.5	0.4	0.35	0.3			
516	**315**	1	0.7	0.6	0.5	0.4	0.35			
590	**315**	1	0.7	0.6	0.5	0.4	0.35			

The numerical values of the table can be calculated as follows:

$$\Delta Kr_{perm.} = \Delta S_{perm.} = \left(0.1 + \frac{d_1}{1000}\right) \times \frac{40}{\sqrt{n}}$$

Coupling speed n in 1/min
d_1 corresponds to N-EUPEX size in mm
Radial misalignment $Kr_{perm.}$ in mm

Caution! **Angular and radial misalignment may occur simultaneously.**

6.6 Assignment of tightening torques

FLUDEX Size	N-EUPEX Size	Tightening torque T_A and wrench width S_w for screws Part no.													
		13		22 / 23		103		110 / 142 / 163		121		130 / 131		153	
		T_A Nm	S_w mm	T_A Nm	S_w mm	T_A Nm	S_w mm	T_A Nm	S_w mm	T_A Nm	S_w mm	T_A Nm	S_w mm	T_A Nm	S_w mm
222	**110**	14	6	25	6	22	6	-	-	18.7	6	8	10	25	7
297	**125**	17.5	6	25	6	60	10	75	19 / 27 / 10	18.7	6	8	10	25	7
342	**140**	29	8	49	8	60	10	75	19 / 27 / 10	31	8	21	13	75	10
395	**225**	86	10	86	10	60	10	75	19 / 27 / 10	54	10	21	13	75	10
450	**250**	145	14	210	14	60	10	75	19 / 27 / 10	54	10	40	17	75	10
516	**315**	200	14	210	14	60	10	75	19 / 27 / 10	135	14	40	17	75	10
590	**315**	200	14	210	14	60	10	75	19 / 27 / 10	135	14	73	19	75	10

Table 6.6: Assignment of tightening torques (for part nos. refer to Section 11)

Note: Tightening torques apply to screws with untreated surfaces which are not or only lightly oiled (coefficient of friction $\mu = 0.14$). The use of lubricant paint or the like, which affects the coefficient of friction μ, is not permitted.

Note: The tightening torques of the set screws are specified in item 6.1.4.

7. Start-up

7.1 Procedure before start-up

Before starting up check the flexible elements for correct seating, i.e. the flexible elements must sit flush with the end face of the hub, and the set screws for tightness, check and, if necessary, adjust the alignment and the gap dimension S and check all screw connections for the specified tightening torques (see section 1 and section 6).

7.2 Fluid filling

For use below ground specifically permitted operating fluids only may be used.

The behaviour and the efficiency of the FLUDEX coupling is decisively affected by the quantity of operating fluid put in. As the filling increases, so does the transmitting capacity of the coupling, and the motor load during starting and the max. overload torque on the coupling rises. Operating slip decreases with the identical load.

FLUDEX couplings must not be filled up to more than 80-85% of the total volume (limited by the overfill safety system). As a result of the higher temperature-dependant volume expansion of the operating fluid compared with the aluminium housing higher filling results in a sharp rise in pressure in the coupling, which can result in the coupling being irreparably damaged before the fusing temperature of the fusible safety plug (103) is reached.

The operating fluid must be put in at the filling plug (153). Only these filling holes are provided with a filling channel, which offers protection gainst accidental overfilling. To better ventilate the inner chamber, the screw plug (163) inserted in the outer flange, or, on the size 222, the second fusible safety plug (103), should be unscrewed. It is set at an appropriate angle so that, in the event of imminent overfilling, the excess can escape there.

Caution! **The quantity to be put into the coupling is determined in accordance with the order. The filling quantity in litres is stamped on the coupling and specified in section 1.**

Marking lines with litre quantities have been cast in raised relief on the coupling housing to assist filling the coupling and checking the filling level.

When filling or checking the filling level the mark with the required filling quantity (in the case of intermediate values the corresponding intermediate position) must be turned to the top position (12 o'clock).

In the case of filling above the filling plug (153) the coupling is filled with the required quantity, if the filling level has reached the lip of the hole for the screw plug (163).

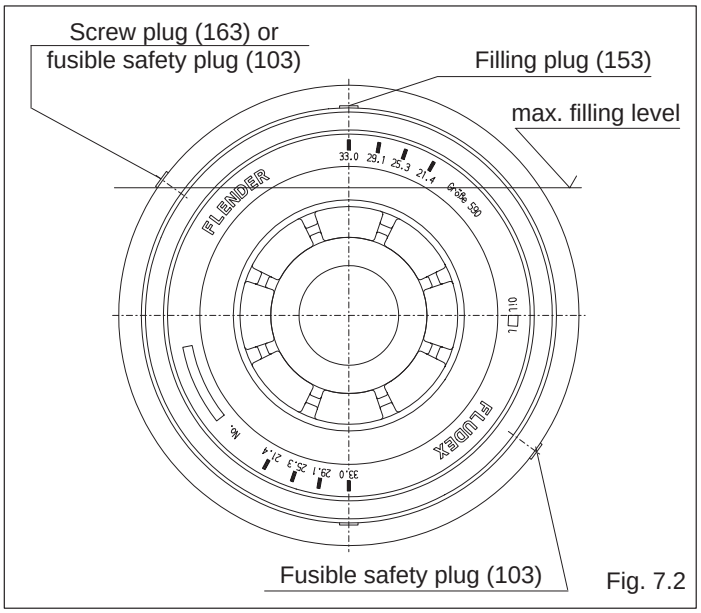

Fig. 7.2

After filling tighten filling plug (153) and screw plug (163)/fusible safety plug (103) (for tightening torques, see section 6, item 6.6) and check coupling for leaktightness by carrying out a short test run. This may be done by holding a clean piece of paper parallel to the turning axis and in close to the rotating surface envelope of the coupling. Any operating fluid spurting out will be visible on the paper.

Caution! **FLUDEX couplings must not lose any operating fluid, as this loss may result in a rise in slip and coupling temperature and ultimately to a fusing of the fusible safety plug (103).**

Then fit the coupling guard to prevent unintentional contact.

Faults in the drive (e.g. locking of the output side) may result in the coupling overheating. If the fusing temperature of the fusible safety plug is reached, the insert will melt and the hot operating fluid (oil, water) escape. The coupling protection must therefore be so designed as to also guarantee protection against operating fluid spurting out without appreciably impairing the ventilation of the coupling. The fusible safety plugs (103) and the filling plugs (153) should be accessible.

⚠ **Rotating parts must be secured by the purchaser against accidental contact. The coupling protection must also protect against spurting hot operating fluid without appreciably impairing ventilation (see also information on the coupling).**

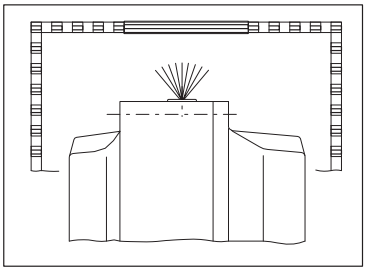

Ex **If it is to be used below ground in potentially explosive areas, the coupling, which is made of aluminium, must be provided with a robust casing to preclude the risk of ignition from e.g. friction, impact or friction sparks.**
The depositing of heavy metal oxides (rust) on the coupling housing must be precluded by the casing or other suitable precautions.

Ex **Couplings to be used in potentially explosive areas are designed with the fusible safety plugs (103) permitted for the temperature class. The coupling is marked with the temperature class of the fusible safety plug (103).**
It must be ensured that the drive shuts off not later than 5 minutes after the fusible safety plug (103) is fused.

7.2.1 Operating fluid: oil

In the case of orders without performance data the filling quantity is not entered. In these cases, for operation with oil the filling quantity for the respective coupling size can be obtained from the filling quanitity tables in section 10, item 10.9 and item 10.10 independently of the speed and output to be transmitted (and possibly the motor output).

Caution! **The filling quantity tables in section 10 apply solely to oil fillings.**

HL or HLP hydraulic oils to DIN 51 524 Part 1 and part 2 of the VG 22 or VG 32 ISO viscosity classes must be used.

Caution! **The oil quality and purity determines the useful life of FLUDEX bearings and shaft sealing rings.**

Company	ARAL	BP	Castrol	Esso	Mobil	Shell	TEXACO
Description	Aral Degol BG 32	BP Energol HL 22 + HLP 22	Hyspin SP22 + SP32	TORQUE FLUID N 45	Mobil DTE 22	Shell Tegula Öl 32	Rando-Oil 32
	Aral Vitam GF 22	BP Energol HL 32 + HLP 32	Hyspin DSP22 + DSP32	TERESSO 32	Mobil DTE 24	Shell Tellus Öl 22	Torque-Fluid 32
	Aral Vitam GF 32	BP Energol HLP-D 32	Tribol 943 AW22 + AW32	NUTO H 22	Mobil Vactra Oil Light	Shell Tellus Öl C22	
				NUTO H 32	Mobilfluid 125		

Table 7.1: Recommended oil grades

⚠ **Observe manufacturer's instructions when handling the operating fluid!**

7.2.2 Operating fluid: water/water emulsion

Caution! **The coupling must be protected against freezing.**

⚠ **Observe manufacturer's instructions when handling the operating fluid!**

Caution! **Not every FLUDEX coupling is suitable for use with water or water emulsion as an operating fluid.**
FLUDEX couplings designed for water fillings are marked as follows in the area of the filling plug: " ▽ W "

⚠ **If water or water emulsion is used as operating fluid, only fusible screws with a maximum fusing temperature of 110 °C are permitted. At a higher fusing temperature excessive strain is put on the coupling housing by the operating fluid vapour pressure.**

8. Operation

8.1 General operating data

During operation of the coupling watch for:

– changes in running noise

– sudden shocks

Caution!

If any irregularities are noticed during operation, switch the drive assembly off at once. Determine the cause of the fault, using the table in section 9.
This table contains a list of possible faults, their causes and suggested remedies.
If the cause cannot be identified or the unit repaired with the facilities available, you are advised to contact one of our customer-service offices for specialist assistance (see section 11).

9. Faults, causes and remedy

9.1 General

The following irregularities can serve as a guide for fault tracing.

Where the system is a complex one, all the other component units must be included when tracing faults.

The coupling must run with little noise and without vibration in all operating phases. Irregular behaviour must be treated as a fault requiring immediate remedy.

Caution!

FLENDER will not be bound by the terms of the guarantee or otherwise be responsible in cases of improper use of the coupling, modifications carried out without FLENDER's agreement, or use of spare parts not supplied by FLENDER.

⚠

When remedying faults and malfunctions, the gear unit must always be taken out of service.
Secure the drive unit to prevent it from being started up unintentionally.
Attach a warning notice to the start switch!

9.2 Possible faults

Malfunctions	Possible causes	Remedy
Sudden changes in the noise level and/or sudden vibrations.	Change of alignment.	Take the system out of service. If necessary, rectify causes of alignment change (e.g. tighten loose foundation bolts). Check and, if necessary, adjust alignment (see section 6). Wear check, procedure as described in section 10.
	Flexible elements (12) worn	Take the system out of service. Demount coupling and remove remains of flexible elements (12) Check and replace damaged coupling parts Flexible elements (12) must be changed in sets; use only identical N-EUPEX flexible elements (12) Assembly of coupling according to section 6 and section 7.
No torque transmission.	The fusible safety screws have fused through overheating or locking and the fluid is escaping from the coupling	Take the system out of service. Rectify the cause of the overheating or locking Fit new fusible safety plugs with new sealing rings Refill the coupling as described in section 7.

Table 9.2: Possible faults

If the torque is being transmitted with worn N-EUPEX flexible elements (12) and metal parts are consequently in contact, proper operation within the meaning of the explosion protection requirements or Guideline 94/9/EC can no longer be guaranteed.

Measurement and assessment of the wear condition of the N-EUPEX flexible elements (12) in accordance with section 10.

9.3 Incorrect use

Experience has shown that the following faults can result in incorrect use of the FLUDEX coupling. In addition to observing the other instructions in this BA, care must therefore be taken to avoid these faults. Guideline 94/9/EC requires the manufacturer and user to exercise especial care.

Failure to observe these instructions may result in breakage of the coupling. Danger from flying fragments!

Through incorrect use the coupling may become an explosion hazard.

Caution! **Incorrect use of the FLUDEX coupling can result in damage to the coupling.**

Caution! **Coupling damage may result in stoppage of the drive and the entire system.**

9.3.1 Possible faults when selecting the coupling or coupling size

- Important information for describing the drive and the environment will not be communicated to others.
- System power too high.
- System speed too high or too low.
- Starting frequency too high.
- The ventilation of the coupling is inadequate.
- Chemically aggressive environment not taken into consideration.
- The ambient temperature is not permissible. See also section 5.
- Machining of a finished bore with incorrect diameter and incorrect fit assignment (see section 6 and title page).
- The transmission capacity of the shaft-hub connection is not appropriate to the operating conditions.

9.3.2 Possible faults when installing the coupling

- Components with transport or other damage are being fitted.
- When mounting coupling parts in a heated condition, already mounted N-EUPEX flexible elements (12) are being excessively heated
- The shaft diameter is outside the specified tolerance range.
- Coupling parts are being interchanged, i.e. their assignment to the specified direction of drive is incorrect.
- Specified axial fixtures are not fitted.
- Prescribed tightening torques are not being adhered to.
- Alignment or shaft misalignment values do not match the operating instructions.
- The incorrect operating fluid or the incorrect quantity of operating fluid is being put in.
- The coupled machines are not correctly fastened to the foundation, so a shifting of the machines e.g. through loosening of the foundation screw connection is causing excessive displacement of the coupling parts.
- N-EUPEX flexible elements (12) are being omitted or incorrectly positioned.
- The coupling protection does not comply with the guidelines to be applied. It considerably restricts ventilation of the coupling.
- Operating instructions are being changed without authorisation.
- Components are being fitted to the coupling which transmit excessive axial forces or bending moments to the coupling.
- Add-on parts such as belt drives or brake disks are not designed in compliance with the guideline 94/9/EC and are an explosion hazard.

9.3.3 Possible faults in maintenance

- Maintenance intervals are not being adhered to.
- The incorrect operating fluid or the incorrect quantity of operating fluid is being put in.
- Original FLENDER spare parts are not being used.
- Prescribed tightening torques are not being adhered to.
- Old or damaged N-EUPEX flexible elements (12) are being used.
- Fusible safety plugs (163) with an unsuitable fusing temperature are being used.
- Leakage in the vicinity of the coupling is not being identified and as a result chemically aggressive media are damaging the coupling.

10. Maintenance and repair

⚠ **All work on the gear unit must be carried out only when it is at a standstill. The drive unit must be secured against being switched on accidentally (e.g. by locking the key switch or removing the fuses from the power supply). A notice should be attached to the ON switch stating clearly that work is in progress.**

⚠ **Risk of burns after switching off!**
Allow FLUDEX coupling to cool down sufficiently before beginning work!

10.1 Changing the operating fluid

⚠ **Never change the operating fluid immediately after operation!**
There is a risk of scalding!
Allow the coupling and the operating fluid to cool down!

The operating fluid must be changed in accordance with the specifications in table 10.1.

When changing the operating fluid, care must be taken that the old operating fluid is completely drained off. This can be done on size 222 through the holes in the fusible safety plugs (103) and on sizes 297-590 through the holes in the screw plugs (163).

⚠ **Observe the environmental requirements in force!**

Operating temperatures/ special measures	max. operating hours	max. years of use
max. 80 °C	10000	5
max. 95 °C or frequent temperature peaks above 100 °C: use of Viton seals necessary	5000	2
above 95 °C only suitable synthetic oils permitted use of Viton seals necessary	according to the specifications of the operating fluid manufacturer	according to the specifications of the operating fluid manufacturer

Table 10.1: Operating temperatures, operating hours and years of use

Different operating conditions and changing frequencies are permitted with the agreement of the operating fluid manufacturer.

10.2 Changing the shaft sealing rings

Shaft sealing rings are wearing parts subjected to relatively low stresses in the coupling. On couplings which are filled with oil no maintenance interval need be adhered to.

On couplings which are filled with water the shaft sealing rings of the inner seal must be replaced after 12 000 operating hours or after 2 years of operation. We recommend also replacing the other seals and rolling bearings at the same time.

10.3 Maintenance interval of the N-EUPEX add-on coupling

The torsional backlash between the two coupling parts must be checked after three months, then at least once a year.

If an increased coupling backlash does not impair the operation of the coupling, the flexible elements (12) can continue to be used up to a specified wear limit before being replaced. To assess wear, the permitted circumferential backlash, converted to the chord dimension ΔS_V on the outer coupling diameter, is shown in table 10.3. To obtain the dimension ΔS_V, one coupling part is rotated without torque as far as the stop and a mark applied to both side (see Fig. 10.3). If the coupling part is rotated in the opposite direction of rotation as far as the stop, the marks move apart. The distance between the marks is the chord dimension ΔS_V. If the dimension ΔS_V exceeds the value in table 10.3, the flexible elements (12) must be replaced.

Caution! **The flexible elements must be replaced in sets.**
Only identically marked flexible elements must be used.

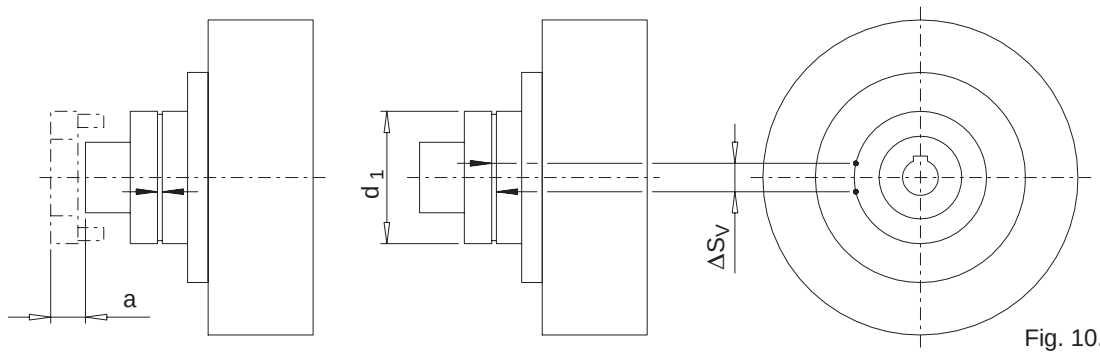

Fig. 10.3

FLUDEX Size	222	297	342	395	450	516	590
N-EUPEX Size [d_1]	**110**	**125**	**140**	**225**	**250**	**315**	**315**
Wear mark ΔS_V [mm]	7.0	8.0	8.0	9.0	10.0	10.5	10.5
Replacement dimension a [mm]	13	11	16	9	11	–	–

Table 10.3: Wear mark

If the above specified maintenance instructions are not adhered to, a correct operation within the meaning of the explosion prevention requirements and Guideline 94/9/EC can no longer be guaranteed.
Use in potentially explosive areas is then not permitted.

10.4 Replacement of the flexible elements

Only **original N-EUPEX flexible elements** must be used for replacement to guarantee troublefree torque transmission and faultfree operation.

On the FAD design replacement of the flexible elements (12) is possible without moving the coupled machines, if the replacement dimension ”a” (see table 10.3 and figure 10.3) is allowed for. After the screw connection part 2/3 is released, part 3 is shifted axially and turned towards part 2. The flexible elements (12) are now freely accessible.

On the FADS design the flexible elements (12) can be demounted after the adaptor (6) and the cam part (7) has been removed.

For re-assembly, the instructions in section 6, ”Assembly”, and section 7, ”Start-up”, must be carefully observed.

10.5 Demounting the FLUDEX coupling

For part designations, see section 11.

Risk of burns after switching off!
Allow FLUDEX coupling to cool down sufficiently before beginning work!

10.5.1 Demounting sizes 222-342

After moving the motor away the retaining screw (141) and locking plate (140) are first removed and then the locking ring (124) demounted. When pulling off the FLUDEX coupling, care must be taken that pulling-off forces are conducted only through the steel hollow shaft (106).

The coupling is best pulled off with the aid of a special pulling-off device as shown in Figure 10.5.1a. The spindle with the pulling-off nut is inserted so that the collar (D) of the pulling-off nut is located behind the recess for the locking ring (124) (Fig. 10.5.1b). To prevent the spindle seizing, the pressure surface and the thread must be treated with a lubricant (e.g. Molykote).

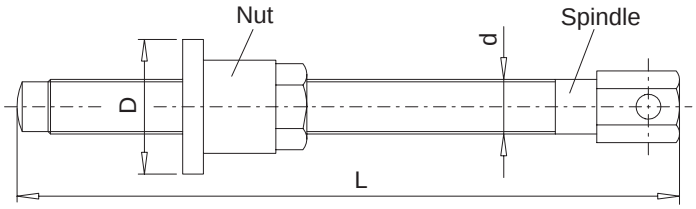

Fig. 10.5.1a

Size		222	297	342
Spindle thread G		G 1/4	G 1/2	G 3/4
Nut collar D $_{h8}$ [mm]		30	45	55
Spindle length L [mm]	FAO, FAK, FAKB, FAD, FADB, FAE, FAM, FADS	200	305	280
	FAR	200	305	420

Table 10.5.1: Dimensions of the threaded spindle and pulling-off nut, sizes 222-342

The locking ring (124) is refitted and the spindle turned forward as far as the shaft stub end face and into the safety countersink in the centring thread. Care must be taken that the nut collar rests evenly against the locking ring.
To prevent flexing and canting, the spindle should be supported as shown.

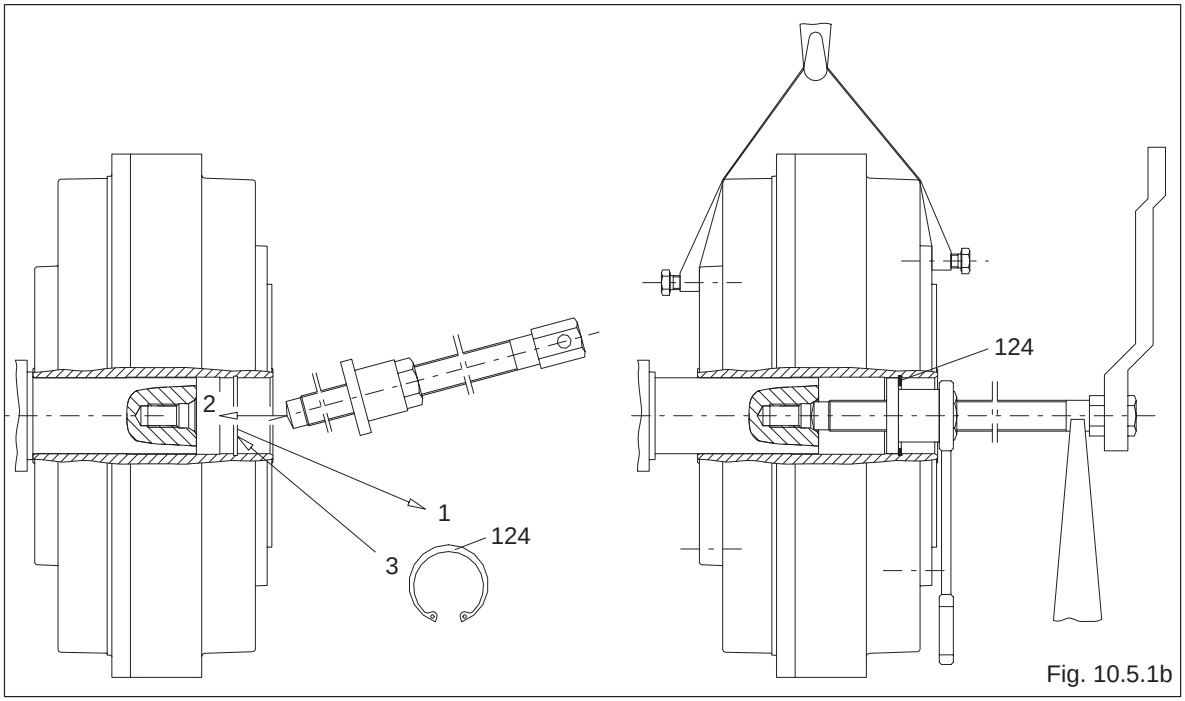

Fig. 10.5.1b

The coupling is pulled off the shaft stub by turning the spindle further into the forcing-off thread and bracing the nut. It is recommended that a hydraulic spindle be used, depending on the size of the coupling.

10.5.2 Demounting sizes 395-590

After moving the motor away the retaining screw (141) and locking plate (140) are first removed. When pulling off the FLUDEX coupling, care must be taken that pulling-off forces are conducted only through the steel hollow shaft (106).

The coupling is normally pulled off with the aid of a threaded spindle, as shown in Figure 10.5.2a. The spindle is screwed into the forcing-off thread (dimension G) of the sleeve (143) and turned forward as far as the shaft stub end face and into the protective countersink in the centring thread (Figure 10.5.2b). To prevent the spindle seizing, the pressure surface and the thread must be treated with a lubricant (e.g. Molykote).

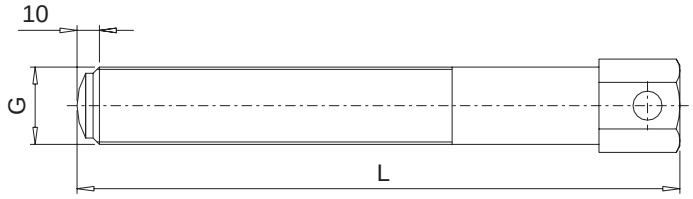

Fig. 10.5.2a

Size		395	450	516	590
Spindle thread G		G 1	G 1	G 1 1/2	G 1 1/2
External cylinder-thread K		M68 x 2	M68 x 2	M100 x 2	M100 x 2
Spindle length L [mm]	FAO, FAK, FAKB, FAD, FADB, FAE, FAM, FADS	280	410	410	410
	FAR	420	590	590	720

Table 10.5.2 Dimensions of the threaded spindle and external cylinder threads, sizes 395-590

To prevent flexing and canting, the spindle should be supported as shown.

The coupling is pulled off the shaft stub by turning the spindle further into the forcing-off thread and bracing the nut. The shaft stub must be fastened to prevent it from rotating.

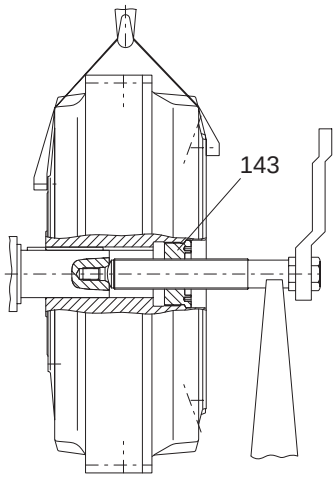

Fig. 10.5.2b

Depending on the size of the coupling, it is recommended that a hydraulic spindle or a hydraulic cylinder be used, as described in the following.

After demounting the threaded bush (143) a hydraulic cylinder with a matching external cylinder-thread K (see table 10.5.2) can be screwed into the free mounting thread of the hollow shaft (106) (figure 10.5.2c).

The coupling can then be pulled off the shaft stub by operating the hydraulic cylinder.

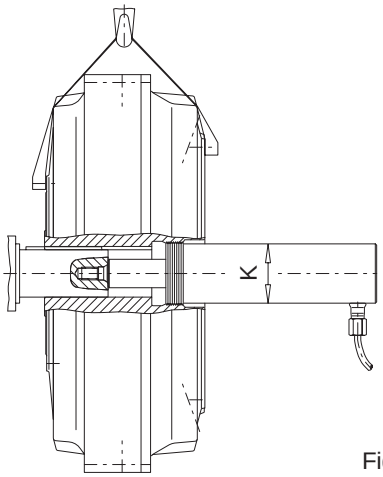

Fig. 10.5.2c

10.6 Demounting the FLUDEX-coupling

For part designations, see section 11.

FLUDEX couplings should as far as possible be repaired at the manufacturer's works.

Before disassembly the housing parts must be marked on the flange in their positions relative to one another.

The housing parts of the coupling, the shell (101) and the cover (102) are joined at the outer flange by screws (130) and nuts (131). For disassembly these screws must first be removed.

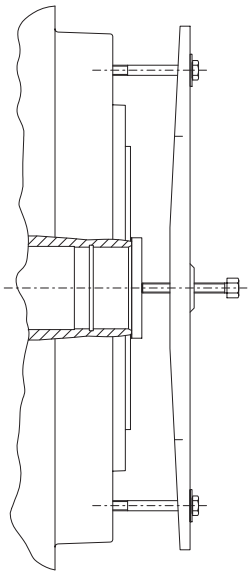

Fig. 10.6

To pull off the shell and cover, a pressure spindle with a bridge and pulling screws must be applied as shown in figure 10.6. The pressure acts on the end face of the steel hollow shaft. The pulling screws are inserted in the flange threads (108) of the shell or cover. After the shell and cover are pulled off, the internal parts (rolling bearings, shaft sealing rings, etc.) will be accessible. The sealing elements should be replaced every time the coupling is disassembled.

10.7 Reassembling the FLUDEX coupling

Reassembly is carried out in the reverse order (note part marking). The O-ring must be lightly greased to assist assembly. The shaft sealing rings (111; 132) are fitted with a grease filling between the dust and sealing lips. Likewise, on the design with an additional Fey laminar ring seal the space between the shaft sealing ring and the plates and the plate mounting groove in the shaft must be filled with grease.

After the old sealing thread has been removed and the sealing surfaces have been cleaned, a fresh sealing thread must be applied to places on the flange which have been sealed with sealing thread. The sealing thread must be placed in a circular form at the place provided on the sealing surface and with the thread ends crossed over. The sealing surface must be undamaged and may be lightly greased for better positioning of the sealing thread.

For tightening torques for screw connections, see section 6, item 6.6.

10.8 Refitting the FLUDEX coupling

For re-assembly, the instructions in section 6, ”Assembly”, and section 7, ”Start-up”, must be carefully observed.

10.9 Filling quantities for FLUDEX FA couplings size 297, 395 and 516

Guide values for VG 22/VG 32 mineral oil

With drive via hollow shaft (106) (inner wheel), valid for $T_{max} = 2.0 \times T_{nom}$

Output	Speed 1/min										
	600	740	890	980	1180	1470	1770	2300	2950	3550	
kW	Oil filling quanitites in litres										
0.55	3.2	2.8									
0.75	3.5	3.0	2.6								
1.1	3.9	3.3	2.9	2.7							
2.2	7.3	4.0	3.4	3.2	2.8						
3.0	7.9	6.8	3.7	3.4	3.0	2.5					
4.0	8.5	7.3	4.0	3.7	3.2	2.7					
5.5	9.4	7.9	6.8	4.1	3.5	2.9	2.6				
7.5	17.0	8.5	7.4	6.9	3.8	3.2	2.8	2.4			
11	18.7	16.0	8.1	7.6	6.6	3.5	3.0	2.5			
15	20.3	17.3	8.9	8.2	7.1	3.8	3.3	2.7			
18	21.4	18.0	15.7	8.6	7.4	4.0	3.4	2.8	2.4		
22		19.0	16.5	15.4	7.8	6.6	3.6	3.0	2.5		
30		20.6	17.8	16.6	8.5	7.2	6.3	3.2	2.7	2.4	
37			18.8	17.5	15.2	7.6	6.6	3.4	2.8	2.5	
45			19.8	18.4	16.0	7.9	6.9	3.6	2.9	2.6	Size 297
55			21.0	19.3	16.8	8.4	7.3	6.0	3.1	2.7	
75				21.1	18.1	15.4	7.9	6.5	5.3	2.9	
90					19.0	16.1	14.1	6.7	5.6	3.0	
110					20.1	16.9	14.8	7.1	5.9		
132						17.7	15.4	7.9	6.2		Size 395
160						18.6	16.2	13.4	6.5		
180						19.2	16.7	13.8	7.0		
200							17.1	14.1			
225							17.6	14.6			
250							18.1	14.9			Size 516
280								15.3			
315								15.8			
350								17.1			

With different operating fluids, drive via the housing or T_{max} not equal to $2 \times T_{nom}$, observe changed filling quantities!

10.10 Filling quantities for FLUDEX FA couplings size 222, 342, 450 and 590

Guide values for VG 22/VG 32 mineral oil

With drive via hollow shaft (106) (inner wheel), valid for $T_{max} = 2.0 \times T_{nom}$

Output	Speed 1/min										
	600	740	890	980	1180	1470	1770	2300	2950	3550	
kW	Oil filling quanitites in litres										
0.55	4.3	1.5	1.4	1.3	1.1						
0.75	4.7	1.65	1.5	1.4	1.2						
1.1	5.1	4.4	1.65	1.6	1.4	1.1					
2.2	6.2	5.2	4.5	4.2	1.6	1.4	1.2				
3.0	9.5	5.6	4.9	4.6	1.65	1.5	1.3	1.0			
4.0	10.2	6.1	5.3	4.9	4.3	1.6	1.4	1.1			
5.5	11.0	9.4	5.7	5.3	4.6	1.65	1.5	1.2	1.0		
7.5	12.0	10.2	6.2	5.8	5.0	4.3	1.6	1.3	1.1		
11	13.4	11.2	9.7	6.4	5.5	4.7	4.1	1.5	1.2	1.0	
15	24.8	12.2	10.5	9.8	6.0	5.0	4.4	1.6	1.3	1.1	
18	25.9	12.9	11.0	10.3	6.3	5.3	4.6	3.9	1.4	1.2	Size 222
22	27.3	23.3	11.6	10.8	9.4	5.5	4.8	4.0	1.4	1.25	
30	29.7	25.2	12.7	11.7	10.1	6.0	5.2	4.3	3.7	1.4	
37	31.5	26.5	23.1	12.4	10.7	9.1	5.5	4.5	3.9	1.5	
45		27.9	24.2	22.6	11.2	9.5	5.8	4.7	4.0	3.5	
55		29.5	25.5	23.7	11.9	10.0	8.8	5.0	4.2	3.7	
75			27.6	25.7	22.3	10.8	9.4	5.4	4.5	3.9	
90			29.0	26.9	23.4	11.3	9.8	8.1	4.7	4.1	Size 342
110				28.3	24.5	12.0	10.4	8.6	4.9	4.3	
132				29.7	25.7	21.9	10.8	8.9	7.6	4.5	
160					27.0	22.9	20.0	9.3	7.8		
180					27.8	23.5	20.6	10.0	8.0		
200					28.6	24.2	21.2	10.9	8.2		
225						24.9	21.8	11.5	8.5		Size 450
250						25.6	22.3		9.6		
280						26.3	22.9		9.9		
315						27.1	23.6		10.5		
350							24.2				Size 590
400							26.4				

With different operating fluids, drive via the housing or T_{max} not equal to $2 \times T_{nom}$, observe changed filling quantities!

11. Spare parts, customer-service addresses

By stocking the most important spare and wearing parts on site, you can ensure that the coupling is ready for use at any time.

When ordering spare parts, always state the following:

– Part no. and designation (see item 11.2), and, if necessary, fusing temperature of the fusible safety plug

– Type/size/delivery order number (see section 1, item 1.1)

– Quantity

We guarantee only the original spare parts supplied by us.

Caution! **Please note that spare parts and accessories not supplied by us have not been tested or approved by us. The installation or use of such products may therefore impair essential characteristics of the coupling under certain circumstances and so pose an active or passive hazard. FLENDER will assume no liability or guarantee for damage caused by spare parts and accessories not supplied by FLENDER.**

Please note that certain components often have special production and supply specifications and that we supply you with spare parts which comply fully with the current state of technical development as well as current legislation.

11.1 Spare-part and customer service addresses

When ordering spare parts or requesting the services of our specialist engineers, please apply first to FLENDER AG.

FLENDER Germany

A. FRIEDR. FLENDER AG
46393 Bocholt - Tel.: (0 28 71) 92-0 - Fax: (0 28 71) 92 25 96
E-mail: contact@flender.com • www.flender.com
Shipping address: Alfred - Flender - Strasse 77 - 46395 Bocholt

A. FRIEDR. FLENDER AG - Kupplungswerk Mussum
Industriepark Bocholt - Schlavenhorst 100 - 46395 Bocholt - Tel.: (0 28 71) 92 28 68 - Fax: (0 28 71) 92 25 79
E-mail: couplings@flender.com • www.flender.com

A. FRIEDR. FLENDER AG - Werk Friedrichsfeld
Am Industriepark 2 - 46562 Voerde - Tel.: (0 28 71) 92-0 - Fax: (0 28 71) 92 25 96
E-mail: contact@flender.com • www.flender.com

Winergy AG
Am Industriepark 2 - 46562 Voerde - Tel.: (0 28 71) 924 - Fax: (0 28 71) 92 24 87
E-mail: info@winergy-ag.com • www.winergy-ag.com

A. FRIEDR. FLENDER AG - Getriebewerk Penig
Thierbacher Strasse 24 - 09322 Penig - Tel.: (03 73 81) 60 - Fax: (03 73 81) 8 02 86
E-mail: ute.tappert@flender.com • www.flender.com

FLENDER - TÜBINGEN GMBH
72007 Tübingen - Tel.: (0 70 71) 7 07-0 - Fax: (0 70 71) 70 74 00
E-mail: sales-motox@flender-motox.com • www.flender.com
Shipping address: Bahnhofstrasse 40 - 72072 Tübingen

LOHER GMBH
94095 Ruhstorf - Tel.: (0 85 31) 3 90 - Fax: (0 85 31) 3 94 37
E-mail: info@loher.de • www.loher.de
Shipping address: Hans-Loher-Strasse 32 - 94099 Ruhstorf

FLENDER SERVICE GMBH
44607 Herne - Tel.: (0 23 23) 940-0 - Fax: (0 23 23) 940 333
E-mail: infos@flender-service.com • www.flender-service.com
24h Service Hotline +49 (0) 17 22 81 01 00
Shipping address: Südstrasse 111 - 44625 Herne

A. FRIEDR. FLENDER AG - FLENDER GUSS
Obere Hauptstrasse 228-230 - 09228 Chemnitz / Wittgensdorf - Tel.: (0 37 22) 64 - 0 - Fax: (0 37 22) 94 - 138
E-mail: flender.guss@flender-guss.com • www.flender-guss.de

11.2 Spare parts list Types FAO, FAK, FAD, FAE, FAM, FADB, FADS

When ordering spare parts, please quote the order number of the original delivery. The order number is stamped on the coupling (blade shell) or stated in section 1.

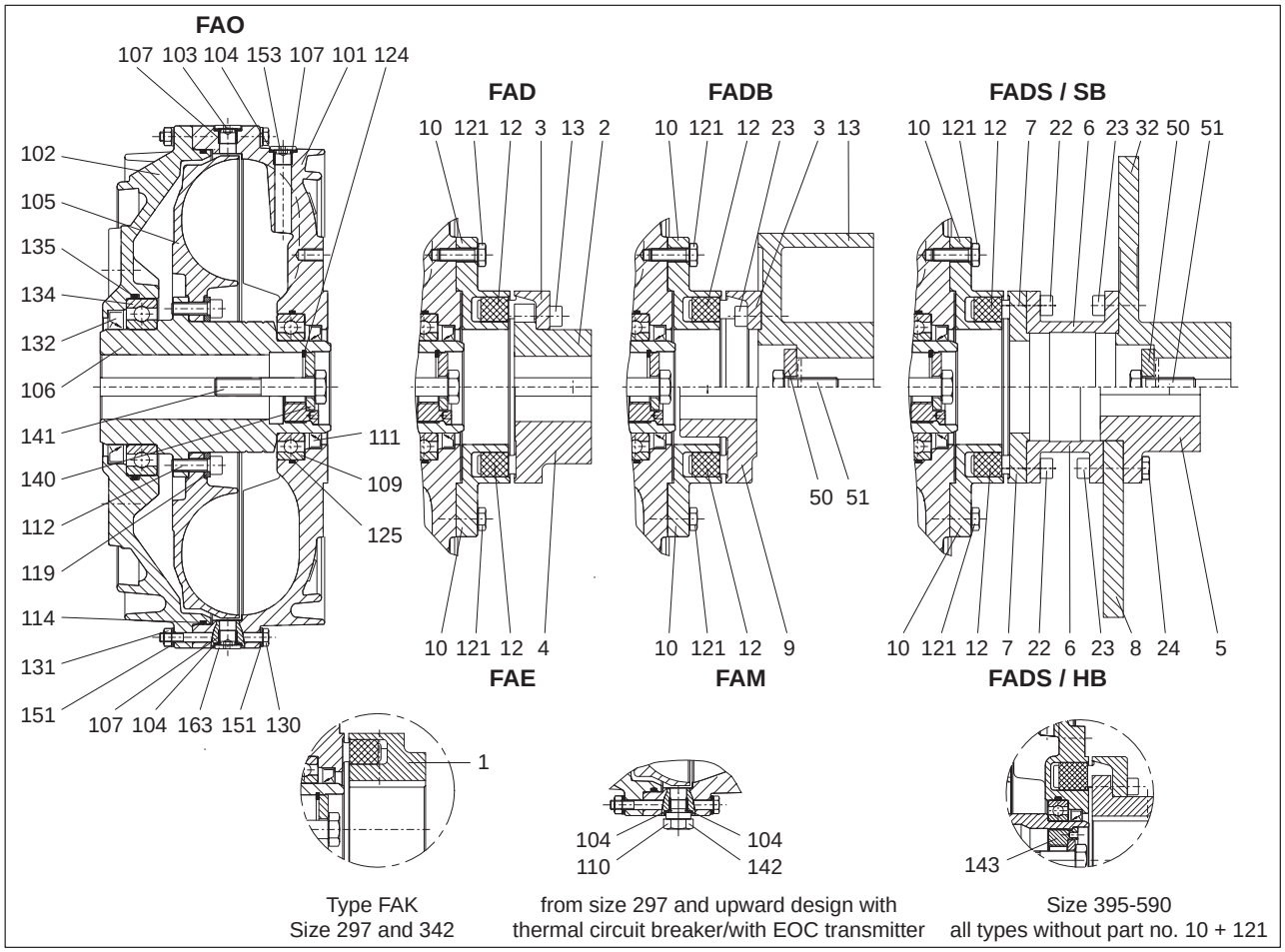

Part no.	Description		Part no.	Description		Part no.	Description	
1	Part 1 (N-EUPEX)		32	Brake disk/drum		119	Retaining ring	E
2	Part 2 (N-EUPEX)		50	Locking plate		121	Hexagon head screw	
3	Part 3 (N-EUPEX)		51	Retaining screw		124	Locking ring	
4	Part 4 (N-EUPEX)					125	O-ring	L
5	Part 5		101	Blade shell	G	130	Hexagon head screw	
6	Part 6 (N-EUPEX)		102	Cover		131	Hexagon nut	
7	Part 7 (N-EUPEX)		103	Fusible safety plug	*	132	Shaft seal	D*
8	Brake disk		104	Sealing ring		134	Anti-friction bearing	L
9	Part 9 (N-EUPEX)		105	Bucket wheel	E**	135	O-ring	L
10	Part 10 (N-EUPEX)		106	Hollow shaft	G**	140	Locking plate	
12	Flexible elements (N-EUPEX)		107	Threaded insert	E	141	Retaining screw	
13	Cheese head screw		109	Anti-friction bearing	L	142	EOC transmitter	
13	Brake drum		110	Thermal circuit-breaker	*	143	Threaded bush	
22	Cheese head screw		111	Shaft seal	D*	151	Washer	
23	Cheese head screw		112	Cheese head screw	E	153	Filling plug	
24	Hexagon head screw		114	O-ring	D*	163	Screw plug	

* When ordering, state fusing temperature of the fusible safety plug (stamped on the screw). The temperature specification serves to determine the sealing material (see also item 5.2).

** Hollow shaft and blade wheel available only as assembled and balanced unit

G = subassembly E = part of a subassembly D = part of the seal set L = part of the bearing set

11.3 Spare parts list, type FAR

When ordering spare parts, please quote the order number of the original delivery. The order number is stamped on the coupling (blade shell) or stated in section 1.

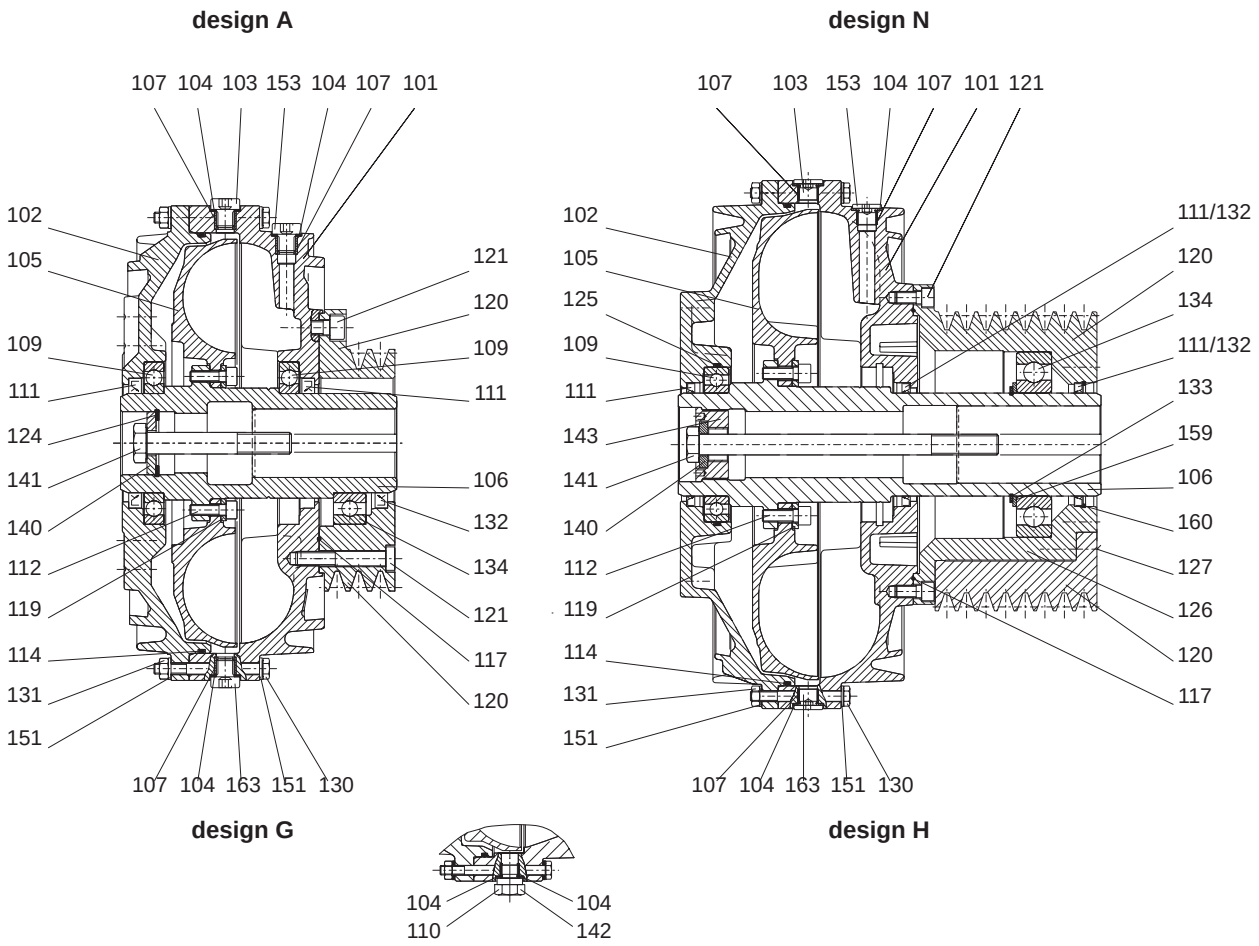

from size 297 and upward design with
thermal circuit breaker/ with EOC transmitter

Part no.	Description		Part no.	Description		Part no.	Description	
101	Blade shell	G	117	Sealing thread	D	133	Locking ring	
102	Cover		119	Retaining ring	E	134	Anti-friction bearing	L
103	Fusible safety plug	*	120	V-belt pulley		140	Locking plate	
104	Sealing ring		121	Cheese head screw		141	Retaining screw	
105	Bucket wheel	E**	124	Locking ring		142	EOC transmitter	
106	Hollow shaft	G**	125	O-ring	L	143	Threaded bush	
107	Threaded insert	E	126	Sleeve flange		151	Washer	
109	Anti-friction bearing	L	127	Cheese head screw		153	Filling plug	
110	Thermal circuit-breaker	*	130	Hexagon head screw		159	Support disk	
111	Shaft seal	D*	131	Hexagon nut		160	Circlip	
112	Cheese head screw	E	132	Shaft seal	D*	163	Screw plug	
114	O-ring	D*						

* When ordering, state fusing temperature of the fusible safety plug (stamped on the screw). The temperature specification serves to determine the sealing material (see also item 5.2).

** Hollow shaft and blade wheel available only as assembled and balanced unit

G = subassembly E = part of a subassembly D = part of the seal set L = part of the bearing set

Germany

A. FRIEDR. FLENDER AG
46393 BOCHOLT - TEL.: (0 28 71) 92 - 0 - FAX: (0 28 71) 92 25 96
SHIPPING ADDRESS: ALFRED - FLENDER - STRASSE 77 - 46395 BOCHOLT

E-mail: contact@flender.com • www.flender.com

VERTRIEBSZENTRUM BOCHOLT
46393 Bocholt
Alfred-Flender-Strasse 77, 46395 Bocholt
Tel.: (0 28 71) 92 - 0
Fax: (0 28 71) 92 - 14 35
E-mail: vz.bocholt@flender.com

VERTRIEBSZENTRUM STUTTGART
70472 Stuttgart
Friolzheimer Strasse 3, 70499 Stuttgart
Tel.: (07 11) 7 80 54 - 51
Fax: (07 11) 7 80 54 - 50
E-mail: vz.stuttgart@flender.com

VERTRIEBSZENTRUM MÜNCHEN
85750 Karlsfeld
Liebigstrasse 14, 85757 Karlsfeld
Tel.: (0 81 31) 90 03 - 0
Fax: (0 81 31) 90 03 - 33
E-mail: vz.muenchen@flender.com

VERTRIEBSZENTRUM BERLIN
Schlossallee 8, 13156 Berlin
Tel.: (0 30) 91 42 50 58
Fax: (0 30) 47 48 79 30
E-mail: vz.berlin@flender.com

12. Declaration by the manufacturer / Declaration of Conformity

Declaration by the manufacturer

in accordance with EC Engineering Guideline 98/37/EC, Appendix II B

We hereby declare that the

FLUDEX Couplings Type
FAO, FAD, FAE, FAM, FADB, FADS, FAK, FAKB and **FAR**
including configuration in accordance with 94/9/EC

described in these Operating Instructions are intended for incorporation in a machine, and that it is prohibited to put them into service before verifying that the machine into which they are incorporated complies with the EC Guidelines (original edition 98/37/EC including any subsequent amendments thereto).

Bocholt, 2004-09-03

Signature (person responible for product)

Declaration of Conformity

within the meaning of EC Guideline 94/9/EC of 23.03.94
and with the legal requirements laid down for its implementation

The manufacturer A. Friedr. Flender AG, D 46393 Bocholt, declares that the

FLUDEX Couplings Type
FAO, FAD, FAE, FAM, FADB, FADS, FAK, FAKB and **FAR**
including configuration in accordance with 94/9/EC

equipment described in these operating instructions is in conformity with Article 1 and Article 8, Par graph 1) b) ii) of Guideline 94/9/EC and complies with the requirements of Guideline 94/9/EC and the standards EN 1127-1 : 1997, DIN EN 13463-1 / -5 / -6 / -8 and BGR 132 : 2003.

The technical documentation has been delivered to the named body

EXAM, BBG Prüf- und Zertifizier GmbH, D 44727 Bochum, Code Number: 0158.

Bocholt, 2004-09-03

Signature (person responible for product)

Signature (Director Engineering)

Signature (Couplings Division)

FLENDER International

(2004-08-01)

E U R O P E

AUSTRIA
Flender Ges.m.b.H.
Industriezentrum Nö-Süd
Strasse 4, Objekt 14, Postfach 132
2355 Wiener Neudorf
Phone: +43 (0) 22 36 6 45 70
Fax: +43 (0) 22 36 6 45 70 10
E-mail: office@flender.at
www.flender.at

BELGIUM & LUXEMBOURG
N.V. Flender Belge S.A.
Cyriel Buyssestraat 130
1800 Vilvoorde
Phone: +32 (0) 2 - 2 53 10 30
Fax: +32 (0) 2 - 2 53 09 66
E-mail: sales@flender.be

BULGARIA
A. Friedr. Flender AG
Branch Office
c/o Auto - Profi GmbH
Alabin Str. 52, 1000 Sofia
Phone: +359 (0) 2 - 9 80 66 06
Fax: +359 (0) 2 - 9 80 33 01
E-mail: flender@auto-profi.com

CROATIA / SLOVENIA
BOSNIA-HERZEGOVINA
A. Friedr. Flender AG
Branch Office
c/o HUM - Naklada d.o.o.
Mandroviceva 3, 10000 Zagreb
Phone: +385 (0) 1 - 2 30 60 25
Fax: +385 (0) 1 - 2 30 60 24
E-mail: flender@hi.hinet.hr

CZECH REPUBLIC
A. Friedr. Flender AG
Branch Office
Hotel DUO, Teplicka 17
19000 Praha 9
Phone: +420 2 - 83 88 23 00
Fax: +420 2 - 83 88 22 05
E-mail: flender_pumprla@hotelduo.cz

DENMARK
Flender Scandinavia A/S
Rugmarken 35 B, 3520 Farum
Phone: +45 - 70 22 60 03
Fax: +45 - 44 99 16 62
E-mail: kontakt@flenderscandinavia.com
www.flenderscandinavia.com

ESTHONIA / LATVIA / LITHUANIA
Flender Branch Office
Addinol Mineralöl Marketing OÜ
Suur-Söjamäe 32
11415 Tallinn / Esthonia
Phone: +372 (0) 6 - 27 99 99
Fax: +372 (0) 6 - 27 99 90
E-mail: flender@addinol.ee
www.addinol.ee

FINLAND
Flender Oy
Ruosilantie 2 B, 00390 Helsinki
Phone: +358 (0) 9 - 4 77 84 10
Fax: +358 (0) 9 - 4 36 14 10
E-mail: webmaster@flender.fi
www.flender.fi

FRANCE
Flender S.a.r.l.
3, rue Jean Monnet - B.P. 5
78996 Elancourt Cedex
Phone: +33 (0) 1 - 30 66 39 00
Fax: +33 (0) 1 - 30 66 35 13
E-mail: sales@flender.fr

SALES OFFICES:
Flender S.a.r.l.
Agence de Lyon
Parc Inopolis, Route de Vourles
69230 Saint Genis Laval
69006 Lyon
Phone: +33 (0) 4 - 72 83 95 20
Fax: +33 (0) 4 - 72 83 95 39
E-mail: sales@flender.fr

Flender - Graffenstaden SA
1, rue du Vieux Moulin
67400 Illkirch-Graffenstaden
B.P. 84
67402 Illkirch - Graffenstaden
Phone: +33 (0) 3 - 88 67 60 00
Fax: +33 (0) 3 - 88 67 06 17
E-mail: flencomm@flender-graff.com

GREECE
Flender Hellas Ltd.
2, Delfon str., 11146 Athens
Phone: +30 210 - 2 91 72 80
Fax: +30 210 - 2 91 71 02
E-mail: flender@otenet.gr

HUNGARY
A. Friedr. Flender AG
Branch Office
Bécsi Út 3-5, 1023 Budapest
Phone: +36 (0) 1 - 3 45 07 90 / 91
Fax: +36 (0) 1 - 3 45 07 92
E-mail: jambor.laszlo@axelero.hu

ITALY
Flender Cigala S.p.A.
Parco Tecnologico Manzoni
Palazzina G
Viale delle industrie, 17
20040 Caponago (MI)
Phone: +39 (0) 02 - 95 96 31
Fax: +39 (0) 02 -95 74 39 30
E-mail: info@flendercigala.it

THE NETHERLANDS
Flender Nederland B.V.
Lage Brink 5-7
7317 BD Apeldoorn
Postbus 1073
7301 BH Apeldoorn
Phone: +31 (0) 55 - 5 27 50 00
Fax: +31 (0) 55 - 5 21 80 11
E-mail: sales@flender.nl
www.flender.nl

Bruinhof B.V.
Boterdiep 37
3077 AW Rotterdam
Postbus 9607
3007 AP Rotterdam
Phone: +31 (0) 10 - 4 97 08 08
Fax: +31 (0) 10 - 4 82 43 50
E-mail: info@bruinhof.nl
www.bruinhof.nl

NORWAY
Please refer to
Flender Scandinavia A/S
Rugmarken 35 B, 3520 Farum
Phone: +45 - 70 22 60 03
Fax: +45 - 44 99 16 62
E-mail: kontakt@flenderscandinavia.com
www.flenderscandinavia.com

POLAND
A. Friedr. Flender AG
Branch Office
Przedstawicielstwo w Polsce
ul. Wyzwolenia 27
43 - 190 Mikolów
Phone: +48 (0) 32 - 2 26 45 61
Fax: +48 (0) 32 - 2 26 45 62
E-mail: flender@pro.onet.pl
www.flender.pl

PORTUGAL
Rodamientos FEYC, S.A
R. Jaime Lopes Dias, 1668 CV
1750 - 124 Lissabon
Phone: +351 (0) 21 - 7 54 24 10
Fax: +351 (0) 21 - 7 54 24 19
E-mail: info@rfportugal.com

ROMANIA
A. Friedr. Flender AG
Branch Office
B-dul Garii Obor Nr. 8D
Sector 2 - Bucuresti
Phone: +40 (0) 21 - 2 53 21 28
Fax: +40 (0) 21 - 2 52 98 60
E-mail: office@flender.ro

RUSSIA
F & F GmbH
Tjuschina 4-6
191119 St. Petersburg
Phone: +7 (0) 8 12 - 3 20 90 34
Fax: +7 (0) 8 12 - 3 40 27 60
E-mail: flendergus@mail.spbnit.ru

SLOVAKIA
A. Friedr. Flender AG
Branch Office
Vajanského 49
P.O. Box 286, 08001 Presov
Phone: +421 (0) 51 - 7 70 32 67
Fax: +421 (0) 51 - 7 70 32 67
E-mail: micenko.flender@nextra.sk

SPAIN
Flender Ibérica S.A.
Poligono Industrial San Marcos
Calle Morse, 31 (Parcela D-15)
28906 Getafe - Madrid
Phone: +34 (0) 91 - 6 83 61 86
Fax: +34 (0) 91 - 6 83 46 50
E-mail: f-iberica@flender.es
www.flender.es

SWEDEN
Flender Scandinavia
Äsenvägen 2
44339 Lerum
Phone: +46 (0) 302 - 1 25 90
Fax: +46 (0) 302 - 1 25 56
E-mail: kontakt@flenderscandinavia.com
www.flenderscandinavia.com

SWITZERLAND
Flender AG
Zeughausstr. 48
5600 Lenzburg
Phone: +41 (0) 62 8 85 76 00
Fax: +41 (0) 62 8 85 76 76
E-mail: info@flender.ch
www.flender.ch

TURKEY
Flender Güc Aktarma Sistemleri
Sanayi ve Ticaret Ltd. Sti.
IMES Sanayi, Sitesi
E Blok 502. Sokak No. 22
81260 Dudullu - Istanbul
Phone: +90 (0) 2 16 - 4 66 51 41
Fax: +90 (0) 2 16 3 64 59 13
E-mail: cuzkan@flendertr.com
www.flendertr.com

UKRAINE
A. Friedr. Flender AG
Branch Office, c/o DIV - Deutsche Industrie-
vertretung, Prospect Pobedy 44
252057 Kiev
Phone: +380 (0) 44 - 4 46 80 49
Fax: +380 (0) 44 - 2 30 29 30
E-mail: flender@div.kiev.ua

UNITED KINGDOM & EIRE
Flender Power Transmission Ltd.
Thornbury Works, Leeds Road
Bradford
West Yorkshire BD3 7EB
Phone: +44 (0) 12 74 65 77 00
Fax: +44 (0) 12 74 66 98 36
E-mail: flenders@flender-power.co.uk
www.flender-power.co.uk

SERBIA-MONTENEGRO
ALBANIA / MACEDONIA
A. Friedr. Flender AG
Branch Office
c/o G.P.Inzenjering d.o.o.
III Bulevar 54 / 19
11070 Novi Beograd
Phone: +381 (0) 11 - 60 44 73
Fax: +381 (0) 11 - 3 11 67 91
E-mail: flender@eunet.yu

A F R I C A

NORTH AFRICAN COUNTRIES
Please refer to Flender s.a.r.l.
3, rue Jean Monnet - B.P. 5
78996 Elancourt Cedex
Phone: +33 (0) 1 - 30 66 39 00
Fax: +33 (0) 1 - 30 66 35 13
E-mail: sales@flender.fr

EGYPT
Sons of Farid Hassanen
81 Matbaa Ahlia Street
Boulac 11221, Cairo
Phone: +20 (0) 2 - 5 75 15 44
Fax: +20 (0) 2 - 5 75 17 02
E-mail: hussein@sonfarid.com

SOUTH AFRICA
Flender Power Transmission (Pty.) Ltd.
Cnr. Furnace St & Quality Rd.
P.O. Box 131, Isando 1600
Johannesburg
Phone: +27 (0) 11 - 5 71 20 00
Fax: +27 (0) 11 - 3 92 24 34
E-mail: sales@flender.co.za
www.flender.co.za

SALES OFFICES:
Flender Power Transmission (Pty.) Ltd.
Unit 3 Marconi Park
9 Marconi Crescent, Montague Gardens
P.O. Box 37291
Chempet 7442, Cape Town
Phone: +27 (0) 21 - 5 51 50 03
Fax: +27 (0) 21 - 5 52 38 24
E-mail: sales@flender.co.za

Flender Power Transmission (Pty.) Ltd.
Unit 3 Goshawk Park
Falcon Industrial Estate
P.O. Box 1608
New Germany 3620, Durban
Phone: +27 (0) 31 - 7 05 38 92
Fax: +27 (0) 31 - 7 05 38 72
E-mail: sales@flender.co.za

Flender Power Transmission (Pty.) Ltd.
9 Industrial Crescent, Ext. 25
P.O. Box 17609, Witbank 1035
Phone: +27 (0) 13 - 6 92 34 38
Fax: +27 (0) 13 - 6 92 34 52
E-mail: sales@flender.co.za

Flender Power Transmission (Pty.) Ltd.
Unit 14 King Fisher Park, Alton
Cnr. Ceramic Curve & Alumina Allee
P.O. Box 101995
Meerensee 3901, Richards Bay
Phone: +27 (0) 35 - 7 51 15 63
Fax: +27 (0) 35 - 7 51 15 64
E-mail: sales@flender.co.za

A M E R I C A

ARGENTINA
Chilicote S.A.
Avda. Julio A. Roca 546
C 1067 ABN Buenos Aires
Phone: +54 (0) 11 - 43 31 66 10
Fax: +54 (0) 11 - 43 31 42 78
E-mail: chilicote@chilicote.com.ar

BRASIL
Flender Brasil Ltda.
Rua Quatorze, 60 - Cidade Industrial
32211 - 970, Contagem - MG
Phone: +55 (0) 31 - 33 69 21 00
Fax: +55 (0) 31 - 33 69 21 66
E-mail: vendas@flenderbrasil.com

SALES OFFICES:
Flender Brasil Ltda.
Rua James Watt, 142
conj. 142 - Brooklin Novo
04576 - 050, São Paulo - SP
Phone: +55 (0) 11 - 55 05 99 33
Fax: +55 (0) 11 - 55 05 30 10
E-mail: flesao@uol.com.br

Flender Brasil Ltda.
Rua Campos Salles, 1095
sala 04 - Centro 14015 - 110,
Ribeirão Preto - SP
Phone: +55 (0) 16 - 6 35 15 90
Fax: +55 (0) 16 - 6 35 11 05
E-mail: flender.ribpreto@uol.com.br

CANADA
Flender Power Transmission Inc.
215 Shields Court, Units 4 - 6
Markham, Ontario L3R 8V2
Phone: +1 (0) 9 05 - 3 05 10 21
Fax: +1 (0) 9 05 - 3 05 10 23
E-mail: info@flenderpti.com
www.flender.ca

CHILE / ARGENTINA / BOLIVIA
ECUADOR / PARAGUAY / URUGUAY
Flender Cono Sur Limitada
Avda. Galvarino Gallardo 1534
Providencia, Santiago
Phone: +56 (0) 2 - 2 35 32 49
Fax: +56 (0) 2 - 2 64 20 25
E-mail: flender@flender.cl
www.flender.cl

COLOMBIA
A.G.P. Representaciones Ltda.
Flender Liaison Office Colombia
Av Boyaca No 23A
50 Bodega UA 7-1, Bogotá
Phone: +57 (0) 1 - 5 70 63 53
Fax: +57 (0) 1 - 5 70 73 35
E-mail: aguerrero@agp.com.co
www.agp.com.co

MEXICO
Flender de Mexico S.A. de C.V.
17, Pte, 713 Centro
72000 Puebla
Phone: +52 (0) 2 22 - 2 37 19 00
Fax: +52 (0) 2 22 - 2 37 11 33
E-mail: szugasti@flendermexico.com
www.flendermexico.com

SALES OFFICES:
Flender de Mexico S.A. de C.V.
Lago Nargis No. 38
Col. Granada,
11520 Mexico, D.F.
Phone: +52 (0) 55 - 52 54 30 37
Fax: +52 (0) 55 - 55 31 69 39
E-mail: info@flendermexico.com

Flender de Mexico S.A. de C.V.
Ave. San Pedro No. 231-5
Col. Miravalle
64660 Monterrey, N.L.
Phone: +52 (0) 81 - 83 63 82 82
Fax: +52 (0) 81 - 83 63 82 83
E-mail: info@flendermexico.com

PERU
Potencia Industrial E.I.R.L.
Calle Gonzales Olaechea
110-URB, La Aurora
Miraflores, Lima
Phone: +51 (0) 1 - 2 42 84 68
Fax: +51 (0) 1 - 2 42 08 62
E-mail:
cesarzam@ potenciaindustrial.com.pe
www.potenciaindustrial.com.pe

USA
Flender Corporation
950 Tollgate Road
P.O. Box 1449, Elgin, IL. 60123
Phone: +1 (0) 8 47 - 9 31 19 90
Fax: +1 (0) 8 47 - 9 31 07 11
E-mail: flender@flenderusa.com
www.flenderusa.com

Flender Corporation
Service Centers West
4234 Foster Ave.
Bakersfield, CA. 93308
Phone: +1 (0) 6 61 - 3 25 44 78
Fax: +1 (0) 6 61 - 3 25 44 70
E-mail: flender1@lightspeed.net

VENEZUELA
F. H. Transmisiones S.A.
Urbanización Buena Vista
Calle Johan Schafer o Segunda Calle
Municipio Sucre, Petare
Caracas
Phone: +58 (0) 2 12 - 21 52 61
Fax: +58 (0) 2 12 - 21 18 38
E-mail: fhtransm@telcel.net.ve
www.fhtransmisiones.com

A S I A

BANGLADESH / SRI LANKA
Please refer to Flender Limited
No. 2 St. George's Gate Road
5th Floor, Hastings
Kolkata - 700 022
Phone: +91 (0) 33 - 2 23 05 45
Fax: +91 (0) 33 - 2 23 18 57
E-mail: flender@flenderindia.com

PEOPLE'S REPUBLIC OF CHINA
Flender Power Transmission
(Tianjin) Co. Ltd.
ShuangHu Rd.- Shuangchen Rd. West
Beichen Economic Development
Area (BEDA)
Tianjin 300400
Phone: +86 (0) 22 - 26 97 20 63
Fax: +86 (0) 22 - 26 97 20 61
E-mail: flender@flendertj.com
www.flendertj.com

Flender Power Transmission
(Tianjin) Co. Ltd.
Beijing Office
C-415, Lufthansa Center
50 Liangmaqiao Road, Chaoyang District
Beijing 100016
Phone: +86 (0) 10 - 64 62 21 51
Fax: +86 (0) 10 - 64 62 21 43
E-mail: beijing@flenderprc.com.cn

Flender Power Transmission
(Tianjin) Co. Ltd.
Shanghai Office
1101-1102 Harbour Ring Plaza
18 Xizang Zhong Rd.
Shanghai 200 001
Phone: +86 (0) 21 - 53 85 31 48
Fax: +86 (0) 21 - 53 85 31 46
E-mail: shanghai@flenderprc.com.cn

Flender Power Transmission
(Tianjin) Co. Ltd.
Wuhan Office
Rm. 1503, Jianyin Building,
709 Jianshedadao
Wuhan 430 015
Phone: +86 (0) 27 - 85 48 67 15
Fax: +86 (0) 27 - 85 48 68 36
E-mail: wuhan@flenderprc.com.cn

Flender Power Transmission
(Tianjin) Co. Ltd.
Guangzhou Office
Rm. 2802, Guangzhou International
Electronics Tower
403 Huanshi Rd. East
Guangzhou 510 095
Phone: +86 (0) 20 - 87 32 60 42
Fax: +86 (0) 20 - 87 32 60 45
E-mail: guangzhou@flenderprc.com.cn

Flender Power Transmission
(Tianjin) Co. Ltd.
Chengdu Office
G-6 / F Guoxin Mansion,
77 Xiyu Street
Chengdu 610 015
Phone: +86 (0) 28 - 86 19 83 72
Fax: +86 (0) 28 - 86 19 88 10
E-mail: chengdu@flenderprc.com.cn

Flender Power Transmission
(Tianjin) Co. Ltd.
Shenyang Office
Rm. 2-163, Tower I, City Plaza Shenyan
206 Nanjing Street (N), Heping District
Shenyang 110 001
Phone: +86 (0) 24 - 23 34 20 48
Fax: +86 (0) 24 - 23 34 20 46
E-mail: shenyang@flenderprc.com.cn

Flender Power Transmission
(Tianjin) Co. Ltd.
Xi'an Office
Rm. 302, Shaanzi Zhong Da
International Mansion
30 Southern Rd.
Xi'an 710 002
Phone: +86 (0) 29 - 7 20 32 68
Fax: +86 (0) 29 - 7 20 32 04
E-mail: xian@flenderprc.com.cn

INDIA
Flender Limited
Head Office:
No. 2 St. George's Gate Road
5th Floor, Hastings
Kolkata - 700 022
Phone: +91 (0) 33 - 22 23 05 45
Fax: +91 (0) 33 - 22 23 08 30
E-mail: flender@flenderindia.com

Flender Limited
Industrial Growth Centre
Rakhajungle, Nimpura
Kharagpur - 721 302
Phone: +91 (0) 3222 - 23 33 07
Fax: +91 (0) 3222 - 23 33 64
E-mail: works@flenderindia.com

SALES OFFICES:
Flender Limited
Eastern Regional Sales Office
No. 2 St. George's Gate Road
5th Floor, Hastings
Kolkata - 700 022
Phone: +91 (0) 33 - 22 23 05 45
Fax: +91 (0) 33 - 22 23 08 30
E-mail: ero@flenderindia.com

Flender Limited
Western Regional Sales Office
Plot No. 23, Sector 19 - C
Vashi, Navi Mumbai - 400 705
Phone: +91 (0) 22 - 27 65 72 27
Fax: +91 (0) 22 - 27 65 72 28
E-mail: wro@flenderindia.com

Flender Limited
Southern Regional Sales Office
41 Nelson Manickam Road
Aminjikarai,
Chennai - 600 029
Phone: +91 (0) 44 - 23 74 39 21
Fax: +91 (0) 44 - 23 74 39 19
E-mail: sro@flenderindia.com

Flender Limited
Northern Regional Sales Office
209-A, Masjid Moth, 2nd Floor
(Behind South Extension II)
New Delhi - 110 049
Phone: +91 (0) 11 - 26 25 02 21
Fax: +91 (0) 11 - 26 25 63 72
E-mail: nro@flenderindia.com

INDONESIA
Flender Singapore Pte. Ltd.
Representative Office
06 - 01 Wisma Presisi
Taman Aries Blok A1 No.1
Jakarta Barat 11620
Phone: +62 (0) 21 - 58 90 20 15
Fax: +62 (0) 21 - 58 90 20 19
E-mail: bobwall@cbn.net.id

IRAN
Cimaghand Co. Ltd.
P.O. Box 15745-493
No. 13, 16th East Street
Beyhaghi Ave., Argentina Sq.
Tehran 15156
Phone: +98 (0) 21 - 8 73 02 14
Fax: +98 (0) 21 - 8 73 39 70
E-mail: info@cimaghand.com

ISRAEL
Greenshpon Engineering Works Ltd.
Bar-Lev Industrial Park
Misgav 20179
Phone: +972 (0) 4 - 9 91 31 81
Fax: +972 (0) 4 - 9 91 34 77
E-mail: sales@greenshpon.com
www.greenshpon.com

JAPAN
Flender Japan Co., Ltd.
WBG Marive East 21F
Nakase 2 - 6
Mihama-ku, Chiba-shi
Chiba 261-7121
Phone: +81 (0) 43 - 2 13 39 30
Fax: +81 (0) 43 - 2 13 39 55
E-mail: contact@flender-japan.com

KAZAKHSTAN
A. Friedr. Flender AG
Branch Office
Abay ave 143, 480009 Almaty
Phone: +7 (0) - 32 72 43 39 54
Fax: +7 (0) - 32 72 77 90 82
E-mail: grabarse@kazgate.de

KOREA
Flender Ltd.
7th Fl. Dorim Bldg.
1823 Bangbae-Dong, Seocho-Ku,
Seoul 137-060
Phone: +82 (0) 2 - 34 78 63 37
Fax: +82 (0) 2 - 34 78 63 45
E-mail: sales@flender-korea.com
www.flender-korea.com

KUWAIT
South Gulf Company
Al-Showaikh Ind. Area
P.O. Box 26229, Safat 13123
Phone: +965 (0) - 4 82 97 15
Fax: +965 (0) - 4 82 97 20
E-mail: adelameen@awalnet.net.sa

LEBANON
Gabriel Acar & Fils s.a.r.l.
Dahr-el-Jamal
Zone Industrielle, Sin-el-Fil
B.P. 80484, Beyrouth
Phone: +961 (0) 1 - 49 82 72
Fax: +961 (0) 1 - 49 49 71
E-mail: gacar@beirut.com

MALAYSIA
Flender Singapore Pte. Ltd.
Representative Office
37 A - 2, Jalan PJU 1/39
Dataran Prima
47301 Petaling Jaya
Selangor Darul Ehsan
Phone: +60 (0) 3 - 78 80 42 63
Fax: +60 (0) 3 - 78 80 42 73
E-mail: flender@tm.net.my

PAKISTAN
Please refer to
A. Friedr. Flender AG
46393 Bocholt
Phone: +49 (0) 28 71 - 92 22 59
Fax: +49 (0) 28 71 - 92 15 16
E-mail: ludger.wittag@flender.com

PHILIPPINES
Flender Singapore Pte. Ltd.
Representative Office
28/F, Unit 2814
The Enterprise Centre
6766 Ayala Avenue corner
Paeso de Roxas, Makati City
Phone: +63 (0) 2 - 8 49 39 93
Fax: +63 (0) 2 - 8 49 39 17
E-mail: roman@flender.com.ph

BAHRAIN / IRAQ / JORDAN / LYBIA
OMAN / QATAR / U.A.E. / YEMEN
Please refer to A. Friedr. Flender AG
Middle East Sales Office
IMES Sanayi Sitesi
E Blok 502, Sokak No. 22
81260 Dudullu - Istanbul
Phone: +90 (0) 2 16 - 4 99 66 23
Fax: +90 (0) 2 16 - 3 64 59 13
E-mail: meso@flendertr.com

SAUDI ARABIA
South Gulf Sands Est.
Bandaria Area, Dohan Bldg., Flat 3/1
P.O. Box 32150
Al-Khobar 31952
Phone: +966 (0) 3 - 8 87 53 32
Fax: +966 (0) 3 - 8 87 53 31
E-mail: adelameen@awalnet.net.sa

SINGAPORE
Flender Singapore Pte. Ltd.
13 A, Tech Park Crescent
Singapore 637843
Phone: +65 (0) - 68 97 94 66
Fax: +65 (0) - 68 97 94 11
E-mail: flender@singnet.com.sg
www.flender.com.sg

SYRIA
Misrabi Co & Trading
Mezzeh Autostrade Transportation
Building 4/A, 5th Floor
P.O. Box 12450, Damascus
Phone: +963 (0) 11 - 6 11 67 94
Fax: +963 (0) 11 - 6 11 09 08
E-mail: ismael.misrabi@gmx.net

TAIWAN
A. Friedr. Flender AG
Taiwan Branch Company
1F, No. 5, Lane 240
Nan Yang Street, Hsichih
Taipei Hsien 221
Phone: +886 (0) 2 - 26 93 24 41
Fax: +886 (0) 2 - 26 94 36 11
E-mail: flender_tw@flender.com.tw

THAILAND
Flender Singapore Pte. Ltd.
Representative Office
23/F M Thai Tower, All Seasons Place
87 Wireless Road, Phatumwan
Bangkok 10330
Phone: +66 (0) 2 - 6 27 91 09
Fax: +66 (0) 2 - 6 27 90 01
E-mail: christian.beckers@flender.th.com

VIETNAM
Flender Singapore Pte. Ltd.
Representative Office
Suite 6/6A, 16F Saigon Tower
29 Le Duan Street, District 1
Ho Chi Minh City, Vietnam
Phone: +84 (0) 8 - 8 23 62 97
Fax: +84 (0) 8 - 8 23 62 88
E-mail: flender_vn@flender.com.vn

A U S T R A L I A

Flender (Australia) Pty. Ltd.
9 Nello Place, P.O. Box 6047
Wetherill Park
N.S.W. 2164, Sydney
Phone: +61 (0) 2 - 97 56 23 22
Fax: +61 (0) 2 - 97 56 48 92, 97 56 14 92
E-mail: sales@flender.com.au
www.flender.com.au

SALES OFFICES:
Flender (Australia) Pty. Ltd.
Suite 3, 261 Centre Rd.
Bentleigh, VIC 3204 Melbourne
Phone: +61 (0) 3 - 95 57 08 11
Fax: +61 (0) 3 - 95 57 08 22
E-mail: sales@flender.com.au

Flender (Australia) Pty. Ltd.
Suite 5, 1407 Logan Rd.
Mt. Gravatt
QLD 4122, Brisbane
Phone: +61 (0) 7 - 34 22 23 89
Fax: +61 (0) 7 - 34 22 24 03
E-mail: sales@flender.com.au

Flender (Australia) Pty. Ltd.
Suite 2 403 Great Eastern Highway
W.A. 6104, Redcliffe - Perth
Phone: +61 (0) 8 - 94 77 41 66
Fax: +61 (0) 8 - 94 77 65 11
E-mail: sales@flender.com.au

NEW ZEALAND
Please refer to Flender (Australia) Pty. Ltd.
9 Nello Place, P.O. Box 6047
Wetherill Park
N.S.W. 2164, Sydney
Phone: +61 (0) 2 - 97 56 23 22
Fax: +61 (0) 2 - 97 56 48 92
E-mail: sales@flender.com.au

FLENDER BOCHOLT	**FLUDEX Ersatzteilzeichnung** Spare parts drawing / Dessin de pièces de rechange / Plano de repuestos / Disegno pezzi di ricambio / Wisselstuktekening / Desenho de pecas de subistituicào / Rysunek czesci zamiennych / Чертеж запчастей	Bauart / Type / Type / Tipo / Tipo / Constructie / Tipo / Typ / Серии	FAK
		Groesse / Size / Taille / Tamàno / Grandezza / Maat / Tamanho / Wielkosz / Размер	342
Bei Korrespondenz bitte angeben / Please quote in correspondence / Pour toute correspondance prière d indiquer / Indiquese en toda correspondencia / Da indicare nella corrispondenza / Bij korrespondentie aangeven / Gentileza indicar em correspondencia / Prosze podawac w korespondencji / При переписке указывать		NO. .	

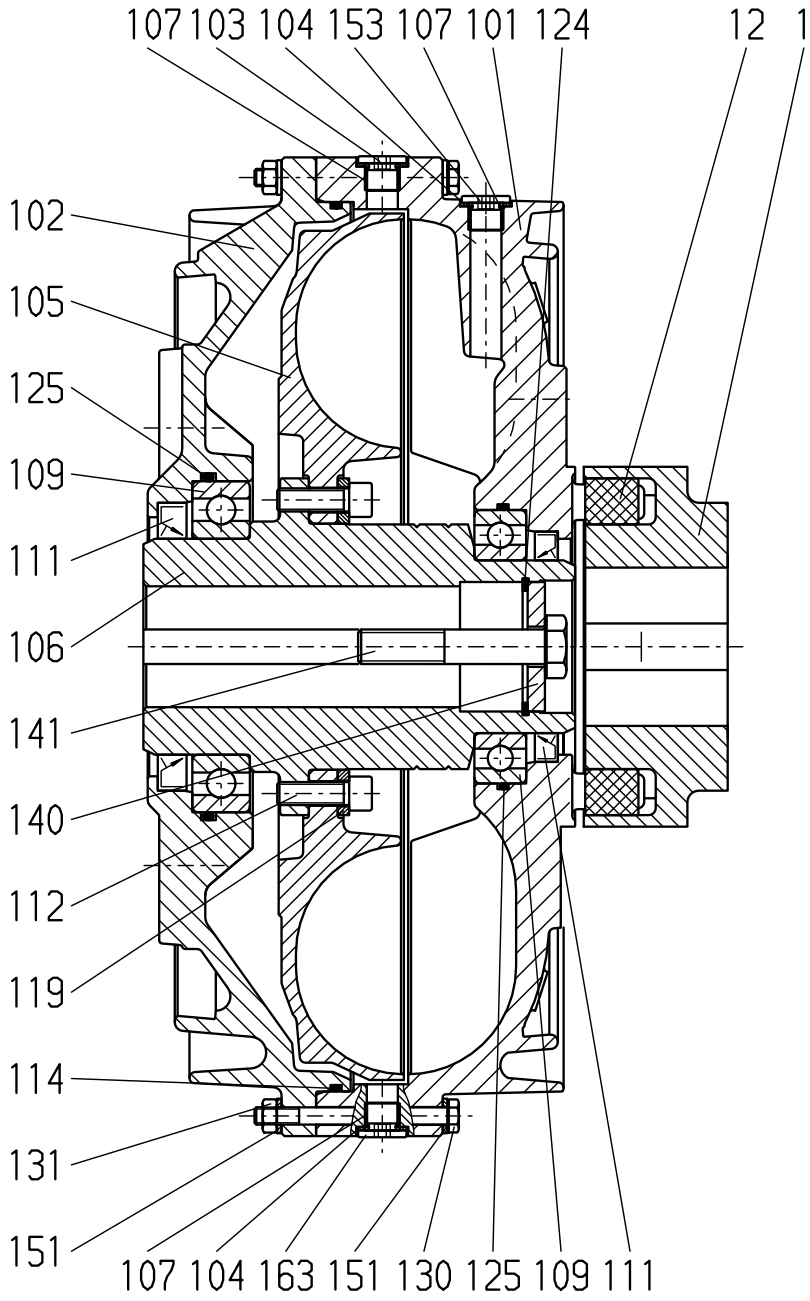

Ausführung / Design / Modèle
Ejecución / Versione / Uitvoering
Execucào / Wykonanie / Исполнение

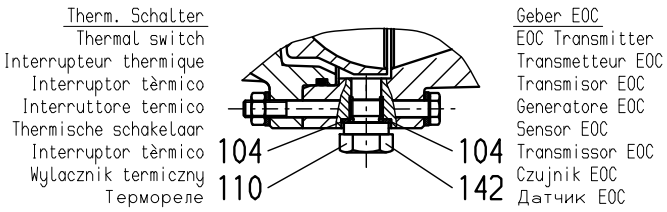

/BO

Diese technische Unterlage hat gesetzlichen Schutz (DIN 34)

E-LISTE FLUDEX FAK 342

A. Friedr. Flender AG, D 46395 Bocholt Tel.+49(0)2871/92-0, Fax+49(0)2871/922596, http://www.flender.com	Datum/ Date 2005-02-09	Name Feldberg	KU
		Z-Nr. **6 079 554** .	V

FLENDER	Stückliste (SL) Parts list	Bauart / Type: FAK Größe / Size: 342,0 Übersetzung / ratio:	Seite / Page 1/2

Bei Korrespondenz bitte angeben
Please quote in correspondence **SL 4190294-240 DE/EN**

Hierzu gehört Zeichnungs-Nr.
Please refer to DWG No. **5298136,6079554,**

	Teil-Nr. Part No.	Menge No. off		Benennung Description		Zeichnungs-Nr. Drawings No.	Material-Nr. Ident no.	Gw(kg) Weight
E	0001	1	ST	TEIL 1 140 050H7 PART 1 140 050H7 EN-JL1040	EN-JL1040	*****	000.000.501.795	3,2
E	0012	6	ST	PAKET 140 BLAU FLEXIBLES 140 BLAU PERBUNAN	PERBUNAN		000.000.390.223	0,1
E	0100	1	ST	FLU FAK342KOMP 55H7 FLUDEX FLUID COUPLING FAK342KOMP 55H7 AL	AL	5240398/-	000.000.652.724	28,5
E*	0101	1	ST	SCHALE 342 FAK SHELL 342 FAK AC43300	AC43300	5241201/F	000.001.219.744	10,5
E**	0107	4	ST	GEW-EIN M18X1,5X13,5 STANDARD THREADED INSERT M18X1,5X13,5 STANDARD	1.4301		000.000.321.027	0,1
E*	0102	1	ST	DECKEL 342 COVER 342 AC43300	AC43300	5240665/F	000.001.219.748	4,8
E*	0105	1	ST	SCHAUFELRAD 342 BLADE WHEEL 342 AC43300	AC43300	5297858/D	000.001.219.749	2,6
E*	0106	1	ST	WELLE-HOHL 342K 55 G6 HOLLOW SHAFT 342K 55 G6 16MnCrS5	16MnCrS5	5298451/B	000.000.653.117	4,9
E**	IW06	1	ST	WELLE 135X0184 342K ROH SHAFT 135X0184 342K ROH 16MnCrS5	16MnCrS5	5298451/B	000.000.275.082	20,7
E*	0109	2	ST	WAELZL 6015 D 625 ROLLING CONTACT BEARING 6015 D 625	MET-KAEF		000.000.380.615	0,7
E*	0111	2	ST	WDR 075X100X11 BABSL SHAFT SEAL 075X100X11 BABSL 72NBR902	72NBR902		000.000.652.141	0,1
E*	0112	8	ST	SCHRB-ZYL M10X030 D 912 HEX.SOCKET HEAD CAP SCREW M10X030 D 912	10.9		000.000.772.934	0,0
E*	0114	1	ST	O-RING OR0340 -04 W 5713 O-RING OR0340 -04 W 5713 NB 70	NB 70		000.000.307.122	0,1
E*	0119	1	ST	RING-HALTE 342 LOCKING RING 342 S355J2G3	S355J2G3	5297873/-	000.000.653.175	0,3
E*	0124	1	ST	RING-SICHER 055X2 D 472 CIRCLIP 055X2 D 472 FED-ST	FED-ST		000.000.343.055	0,1
E*	0125	2	ST	O-RING OR0115 -04 W 5713 O-RING OR0115 -04 W 5713 72NBR872	72NBR872		000.000.307.154	0,1
E*	0130	40	ST	SCHRB-SKT M08X075 D 931 HEXAGON HEAD SCREW M08X075 D 931 8.8-A2C	8.8-A2C		000.000.321.990	0,0
E*	0131	40	ST	MUTTER-SKT M08 D 934 HEXAGON NUT M08 D 934 10-A2C	10-A2C		000.000.340.375	0,1
E*	0151	80	ST	SCHEIBE 08,4 B D 125 DISC 08,4 B D 125 ST-A1C	ST-A1C		000.000.342.011	0,1
E	0103	1	ST	SCHRB-SCHM M18X1,5 160 FUSIBLE SAFETY BOLT M18X1,5 160 5.6-J3A	5.6-J3A	5230001/C	000.000.500.987	0,1
E	0104	3	ST	RING-DICHT 22,0X29,0 A D 7603 SEALING RING 22,0X29,0 A D 7603 AL	AL		000.000.342.252	0,1
E	0140	1	ST	SCHB-END 055/022X14 D END PLATE 055/022X14 D S550GD	S550GD	5230138/-	000.000.652.354	0,2
E	0141	1	ST	SCHRB-SKT M20X090 D 931 HEXAGON HEAD SCREW M20X090 D 931 8.8	8.8		000.000.321.819	0,3

Die mit * gekennzeichneten Teile gehören zu einer Baugruppe (G). Die Baugruppe ist nur komplett auszutauschen.
The parts marked with * belong to a subassembly (G). The subassemblymust be replaced complete.

A. Friedr.Flender AG, D 46393 Bocholt,
Tel.+ 49(0)2871/92-0, Fax+ 49(0)2871/922596, http://www.flender.com

Datum Date	EBBERT, FRANZ	2746
08.05.2006	Rev.:	

FLENDER	Stückliste (SL) Parts list	Bauart / Type: FAK Größe / Size: 342,0 Übersetzung / ratio:	Seite / Page: 2/2

Bei Korrespondenz bitte angeben
Please quote in correspondence **SL 4190294-240 DE/EN**

Hierzu gehört Zeichnungs-Nr.
Please refer to DWG No. **5298136,6079554,**

	Teil-Nr. Part No.	Menge No. off		Benennung Description		Zeichnungs-Nr. Drawings No.	Material-Nr. Ident no.	Gw(kg) Weight
E	0142	1	ST	GEBER-ALU EOC GEF 27 ALU SENSOR EOC GEF 27 AL/FE	AL/FE	5256625/-	000.000.652.781	0,1
E	0153	2	ST	SHR-VSHL M18X1,5 PLUG SCREW M18X1,5 5.8-A3C	5.8-A3C	5240691/B	000.000.275.134	0,0
E	0203	1	ST	SCHRB-SCHM M18X1,5 160 FUSIBLE SAFETY BOLT M18X1,5 160 5.6-J3A	5.6-J3A	5230001/C	000.000.500.987	0,1
E	0204	3	ST	RING-DICHT 22,0X29,0 A D 7603 AL SEALING RING 22,0X29,0 A D 7603 AL			000.000.342.252	0,1

A. Friedr.Flender AG, D 46393 Bocholt,
Tel.+ 49(0)2871/92-0, Fax+ 49(0)2871/922596, http://www.flender.com

Datum Date	EBBERT, FRANZ	2746
08.05.2006	Rev.:	

Operating Instructions

BA 4600.1 EN 07.05

FLUDEX-EOC system

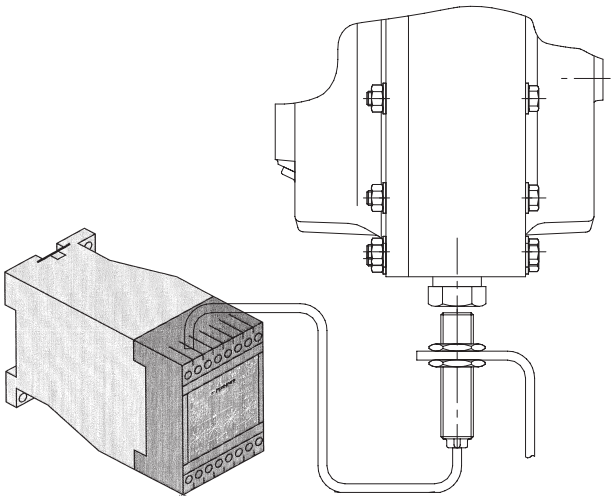

FLENDER

A. Friedr. Flender AG · 46393 Bocholt · Tel. 02871/92-0 · Telefax 02871/92-2596 · www.flender.com

Contents

1.	**Application**	**3**
2.	**Operation**	**3**
3.	**Fitting**	**4**
3.1	Fitting transmitter	4
4.	**Component description**	**5**
4.1	Transmitter	5
4.1.1	Technical data	5
4.2	Pick-up	5
4.2.1	Technical data	5
4.2.2	Connection	5
4.3	Connection, operation and setting of the evaluating instrument (speed monitor)	6
4.3.1	Terminal assignment	6
4.3.2	LED display function and function setting	7
4.3.2.1	LED display function	7
4.3.2.2	Function setting	8
4.3.3	Setting examples - Limit value	8
4.3.4	Technical data speed monitoring device	9
5.	**Use in potentially explosive environments**	**10**
5.1	Isolation amplifier	10
5.1.1	Connection values	10
5.1.2	Technical data isolating switch amplifier	11

Caution! **Installation and start-up must be carried out by properly trained specialist personnel. Please read these operating instructions carefully before starting up. We accept no liability for personal injury or damage due to incorrect handling.**

The EOC complete system must not be used in potentially explosive environments as defined in Guideline 94/9/EC!

1. Application

The ”**E**lectronic **O**perating **C**ontrol” **(EOC)** system monitors the required operating condition of the FLUDEX coupling contactlessly and requires no maintenance. Spraying and loss of operating fluid if the coupling overheats and the pollution of the environment associated with it can be avoided. In the case of internal-gear drives the output speed (minimum value), in addition to the temperature, can be monitored. In this case the EOC system cuts out immediately the output speed falls below its required value or the drive stops even before the coupling overheats. The EOC system can be used on coupling sizes 297 and upward at peripheral speeds > 15 m/s. The transmitter is fitted to the coupling in place of the screw plug (163).

2. Operation

While the coupling is rotating and below the response temperature of 125 °C, each time the pick-up is passed the transmitter emits an impulse signal which is transmitted to the evaluating instrument. The pulse number is compared in the evaluating instrument with the required value set on the front plate and, when the pulse number is fallen below, causes the output relay to cut out.

If as a result of an operating fault the response temperature (oil temperature) exceeds the actuating temperature of 125 °C, the transmitter stops emitting pulses and the output relay of the evaluating instrument drops out. The output relay can trigger a fault signal or trip the drive cut-out.

The evaluating instrument has a time delay which prevents a fault signal during the drive starting phase.

If the monitoring system has cut out, the operating fault must first be rectified. The transmitter must not be exchanged. After it has cooled down to below the actuating temperature, the coupling is once more ready to operate. Depending on the starting heating to be expected (moment of inertia of the drive unit), however, the drive should be switched on only at coupling temperatures under 90 °C.

Caution! **If the coupling is started up again without cooling down, as would be possible because of the time delay, the coupling may further heat up (starting heating), and there is a risk that the fusible safety plug will operate.**

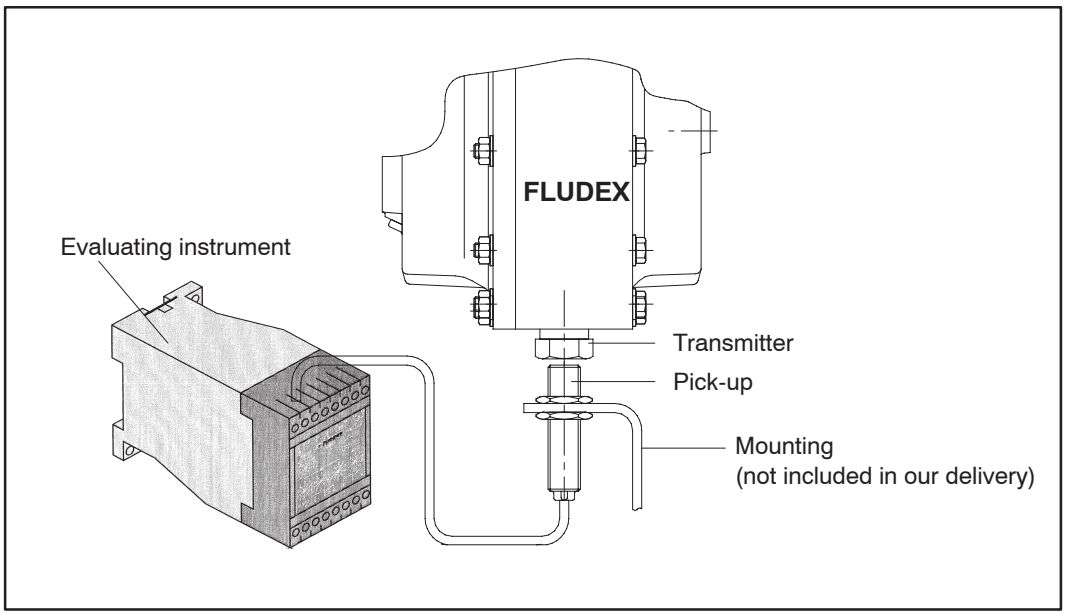

3. Fitting

The EOC system comprises the transmitter, the pick-up and the evaluating instrument. The transmitter is fitted to the coupling housing in place of the screw plug (163). The fusible safety plug (160 °C) remains in the coupling as an emergency safety device. The pick-up is positioned flush with the turning circle of the transmitter (see item 3.1), so that there is a gap of 2 mm between the end faces of the transmitter and the pick-up. The pick-up must be mounted vibrationfree on a firm bracket or part of the bell-housing. Flush-fitting in metal parts is also possible.

The evaluating instrument must preferably be installed in a switch cabinet of the control system provided.

3.1 Fitting transmitter

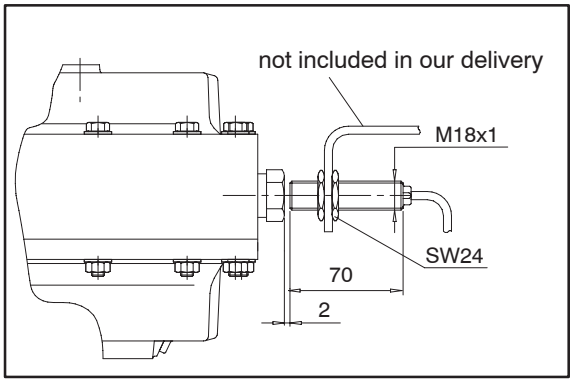

Retrofitting of the EOC system in already installed FLUDEX couplings is possible without reworking in the case of sizes 297-755.

4. Component description

4.1 Transmitter

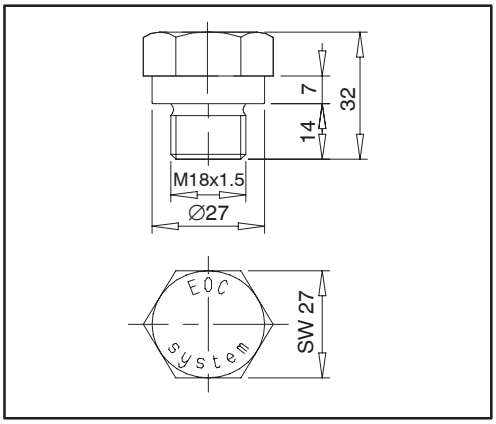

The transmitter comprises an AL bearer screw with an in-built magnet /system which changes its field strength according to the temperature. The magnet system is designed so that at a pick-up distance of 2 mm a cut-out temperature of 125 °C results. If the gap between the pick-up and the transmitter is greater, the EOC system switches at lower temperatures.

4.1.1 Technical data

Type designation	GEF 27
Type	M18x1.5

4.2 Pick-up

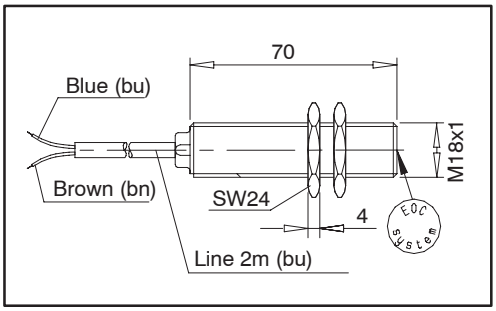

The pick-up records the magnetic field of the transmitter each time it is passed and, if there is sufficient field strength, sends a square-wave signal to the evaluating instrument. Below a fixed field-strength threshold (temperature switching point) no signal is sent.

4.2.1 Technical data

Type designation	BIM-G18-Y1/S926
Output signal	to EN 60947-5-6 (NAMUR)
Type	MS threaded tube chromed M18 x 1 x 70mm
Type of fitting	flush / not flush
Type of protection	IP67
Operating temperature	–25 °C to +70 °C
Approval for use in explosion-hazard areas according to Certificate of Conformity	KEMA 03 ATEX 1122 X

4.2.2 Connection

The connection between the pick-up and the evaluating instrument is established via a two-core conductor. The max. length of conductor with a conductor cross-sectional area of 1.0 mm^2 is 500 m. The feed line must always be laid separately and not with others in multi-core conductors (risk of coupling-in interfering voltages).

4.3 Connection, operation and setting of the evaluating instrument (speed monitor)

4.3.1 Terminal assignment

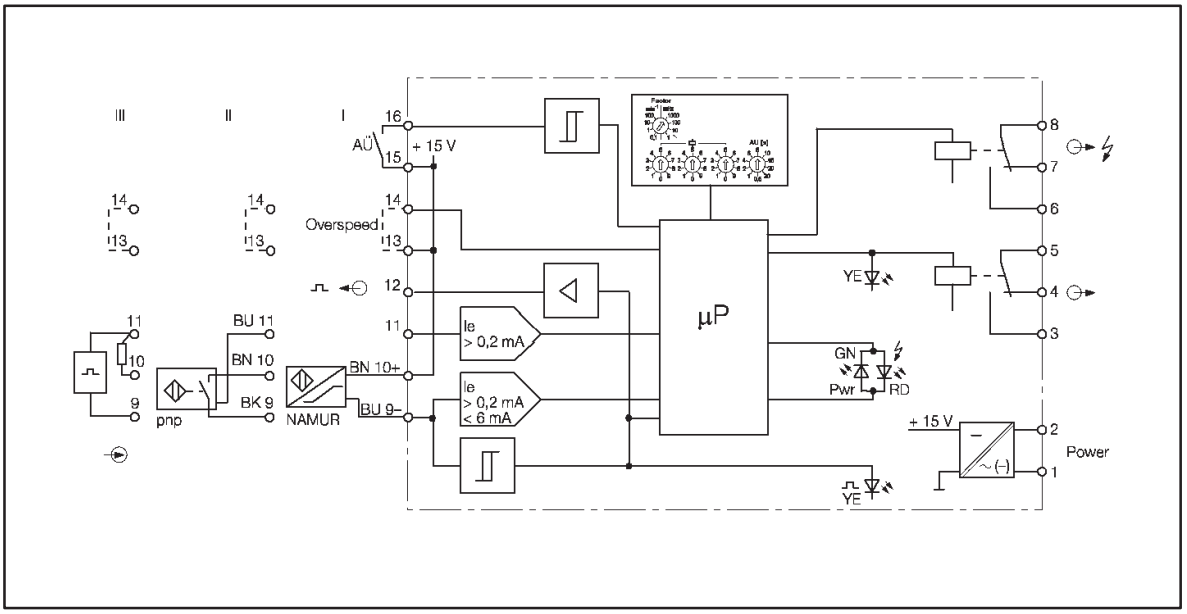

1 - 2 Operating voltage connection

3 - 5 Limit relay output

6 - 8 Fault signal relay, is de-energised in the event of a fault (wire breakage or short circuit)

9 - 11 Sensor connection in accordance with block diagram (III: $R_{10\text{-}11}$ = 1...10kΩ)
9 bu, 10 bn Pick-up connection EOC system

12 Continuous switching output for further transmission of the sensor switching condition

13 - 14 Programming the speed monitoring system:

- Open bridge:
  Monitoring for too low speed (EOC system), limit relay de-energised in the event of too low speed (excessive temperature of coupling).
- Closed bridge:
  Monitoring for too high speed, limit relay de-energised in the event of too high speed (do not use function with EOC system!)

15 - 16 Delayed timing (only with monitoring for too low speed):

- If the operating voltage is switched on with the bridge closed or the bridge closed with the operating voltage on, the limit relay will be forcibly energised for the period of time set on the AU rotary switch and the ”Speed too low” signal blocked in the starting phase.
- Dynamic transmitter-circuit monitoring:
  If during the monitoring for excessive speed and with the bridge closed no pulses are emitted for the time set on the AU rotary switch, the two output relays are de-energised.

4.3.2 LED display function and function setting

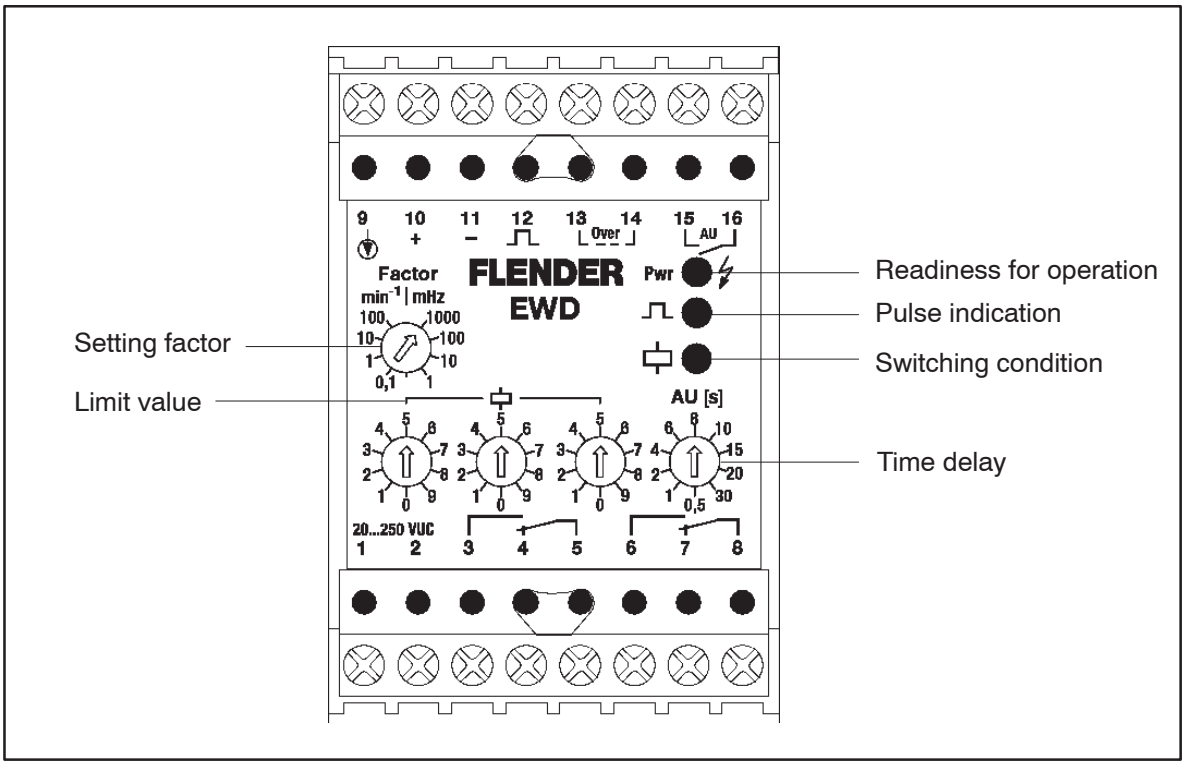

4.3.2.1 LED display function

Readiness for operation Pwr

green:	Device is ready to use
rot:	Invalid switch setting, or in the case of NAMUR sensors wire breakage or short circuit, relay de-energised.

Pulse indication

yellow:	pnp switch closed NAMUR sensor or EOC pick-up not loaded.

Fault diagnosis in the case of NAMUR sensors:

yellow:	Wire breakage in sensor conductor
dark:	Short circuit of sensor conductor

Switching condition

yellow:	Limit relay energised (no excessive temperature on the coupling)

4.3.2.2 Function setting

Time delay AU [s]

Delay time:
If the value is ”too low”, the time in which the limit relay remains forcibly energised after activation of the time delay is set in seconds on the rotary switch.
Dynamic transmitter-circuit monitoring:
If the value is ”too high”, the time within which pulses must be received from the sensor is set in seconds on the rotary switch, otherwise both output relays are de-energised.

Setting factor (see item 4.3.2)

The rotary switch is used to set the multiplication factor and the unit of limit value (min^{-1} or mHz).

Limit value

The rotary switch is used to fix the limit value, multiplied by the setting factor.
(see Setting examples limit value, item 4.3.3)

4.3.3 Setting examples - Limit value

a) The three highest-value places of the limit value are set. The value 1000 is set with the 000 positions.

b) If necessary, a more precise setting of the limit value is possible by converting from min^{-1} <=> mHz.

c) In the case of limit values below 0.1 min^{-1} conversion (x16.67) to MHz must be carried out and this value set.

d) In the case of limit values above 1000 Hz conversion (x60) to min^{-1} must be carried out and this value set.

Example	Limit value	Setting factor	Multiplier (Limit value)
a	5.7 Hz	100 mHz	0 5 7
a	1540 min^{-1}	10 min^{-1}	1 5 4
b	1776 min^{-1}	10 min^{-1}	1 7 7
	more precisely:	100 mHz	2 9 6
c	0.06 min^{-1}	1 mHz	0 0 1
d	1200 Hz	100 min^{-1}	7 2 0

Caution!

Care must be taken that the rotary switches lock in the desired positions!

When monitoring the FLUDEX coupling for excessive temperature (normal operation) the evaluating instrument must be set to approx. 2/3 of the motor speed; otherwise, e.g. in the case of internal gear drives, the corresponding required value must be set.

The delay time must be set so as to be at least as long as the acceleration time!

The evaluating instrument has not been preset at the factory!

4.3.4 Technical data speed monitoring device

Type designation	EWD/20...250VUC
Operating voltage	20...250VAC/DC
Net frequency	40...70Hz
Power requirement	≥ 4.5VA
Monitoring range	0,01Hz ... 1660 Hz or 0.6 ... 100 000 min^{-1}
Input frequency	≤ 150 000 min^{-1}
Pulse time	≥ 0.2 ms
Pulse pause	≥ 0.2 ms
Hysteresis	approx. 10%
Delayed timing/start monitoring	0.5 ... 30 s (in 10 steps)
Reproducibility	≤ 0.1 %
Temperature drift	≤ 0.005 %/K
Air and surface leakage paths	
Input circuit to output circuit	≥ 4 mm
Input circuit to supply	≥ 4 mm (for 230 VAC)
Test voltage	2 kV (for 24 VDC 500 V)
Input circuits	NAMUR/three-wire, pulse-switching
NAMUR input terminal: 9/10	to EN 60947-5-6 (NAMUR)
Working values	U_0 = 8.2 V; I_k = 8.2 mA
Switching threshold	1.4 mA ≤ I_e ≤ 1.8 mA
Switching threshold	≤ 0.15 mA
Short circuit threshold	≥ 6 mA
Three-wire input	pulse-switching, terminals 9 ... 11
Working values	U ≤ 15 V; I ≤ 30 mA
0-signal	0 ... 5 VDC
1-signal	10 ... 30 VDC
Output circuit	two relay outputs and continuous-switching output
Relay output/fault signal output	1 changeover switch each
Switching voltage	≤ 250 V
Switching current	≤ 2 A
Switching power	≤ 500 VA/60 W
Contact material	AgCdO + 3 μ Au
Continuous-switching output	14 V/10 mA, (terminals 11/12) short-circuit-proof
Mounting housing	WxHxD: 50x75x110 mm, polycarbonat/ABS
Fixing	Floor mounting or snap-on fixture to top hat rail (DIN 50 022)
Connection	2 x 8 screw terminals
Terminal cross-section	≤ 2 x 2.5 mm^2 or 2 x 1.5 mm^2 with multi-core cable ends
Type of protection (IEC60529/EN60529)	IP 20
Operating temperature range	– 25 ... + 60 °C

5. Use in potentially explosive environments

When using the EOC system in a potentially explosive environment, an isolation amplifier must be connected in series with the EWD/20...250VUC speed monitor (see item 5.1.1). Here only the pick-up current circuit is designed to be intrinsically safe (EEx-i). The isolation amplifier and speed monitor must not be located in the potentially explosive area.

If an isolation amplifier is used for the ”potentially explosive environment”, only the wire-breakage identification must be active for the power supply lines. Wire breakage and short circuit on the output conductor of the pick-up are not signalled via the fault signal relay but via the output relay through too low speed.

5.1 Isolation amplifier

5.1.1 Connection values

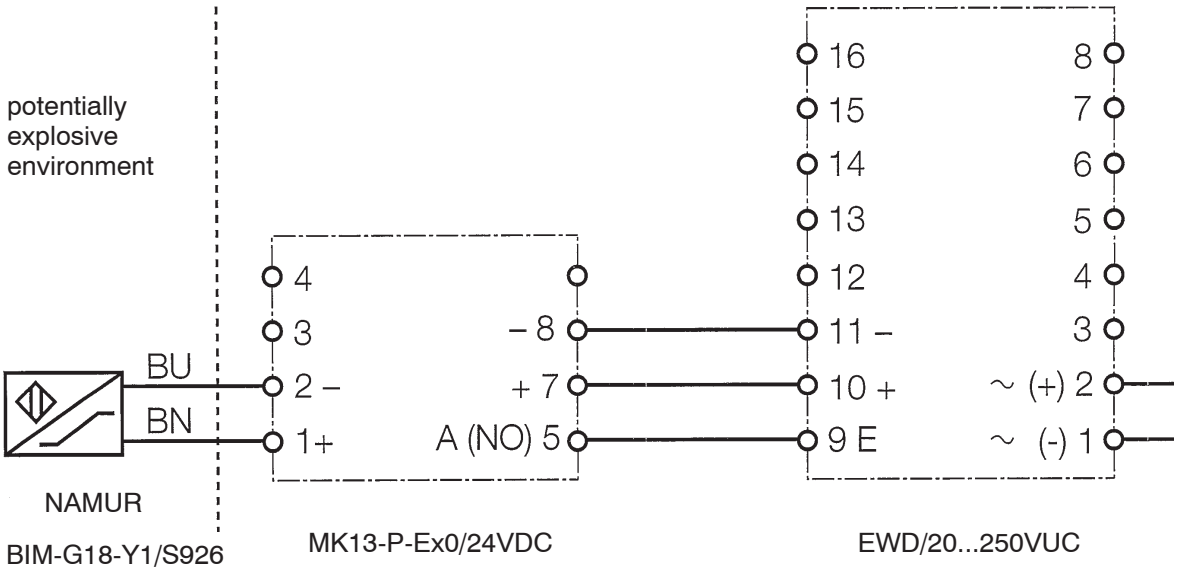

Caution! **The EOC complete system must not be used in potentially explosive environments as defined in Guideline 94/9/EC!**

5.1.2 Technical data isolating switch amplifier

Type designation	MK13-P-Ex0/24VDC
Operating voltage U_B	10...30VDC
Residual ripple W_{ss}	≤ 10%
Current requirement	approx. 20mA
Electrical isolation	Input circuit to output circuit and supply voltage for $250V_{eff}$, test voltage $2.5kV_{eff}$
Input circuit	to EN 60947-5-6 (NAMUR)
Working values	
Working voltage	8.2 V
Current	8.2 mA
Switching threshold	1.55 mA
Hysteresis	typically 0.4 mA
Wire breakage threshold	≤ 0.1 mA
Short circuit threshold	≥ 6 mA
Output circuit	two transistor outputs
Drop in voltage	≤ 2.5 V
Switching current per output	≤ 100 mA, short-circuit-proof, pulse-switching
Switching frequency	≤ 3 kHz
Approval for use in potentially explosive areas according to Certificate of Conformity	TÜV 03 ATEX 2235
Maximum values	
No-load voltage U_0	≤ 9.9 V
Short circuit current I_k	≤ 12 mA
Power P_0	≤ 30 mW
Max. external inductances/capacitances	
[EEx ia] IIB	2/10/20 mH/5/3.6/3.2 µF
[EEx ia] IIC	1/5/10mH/1.1/0.79/0.7 µF
Device identification	II (1) GD [EEx ia] IIC
LED-Anzeigen	
Readiness for operation	green
Switching condition/fault signal	yellow/red (two-colour LED)
Mounting housing	WxHxD: 18x89x70 mm, polycarbonat/ABS
Fixing	Floor mounting or snap-on fixture to top hat rail (DIN 50 022)
Type of protection	IP20
Terminal cross-section	≤ 2 x 2.5 mm^2 or 2 x 1.5 mm^2 with multi-core cable ends
Operating temperature	– 25...+ 70 °C

FLENDER	**Stückliste (SL)** Parts list	**Bauart** **EOC** Type **Größe** **115,0** Size **Übersetzung** ratio	**Seite** Page 1/1

Bei Korrespondenz bitte angeben
Please quote in correspondence **SL 4190294-260 DE/EN**

Hierzu gehört Zeichnungs-Nr.
Please refer to DWG No.

	Teil-Nr. Part No.	Menge No. off		Benennung Description	Zeichnungs-Nr. Drawings No.	Material-Nr. Ident no.	Gw(kg) Weight
E	0010	1	ST	WAECHT-DREHZ EWD/20...250VUC SPEED MONITOR EWD/20...250VUC		000.001.205.294	0,1
E	0020	1	ST	SIGNALEMPFAENGER BIM-G18-Y1/S. EOC SIGNAL-RECEIVER BIM-G18-Y1/S. EOC		000.000.361.460	0,1

Die mit * gekennzeichneten Teile gehören zu einer Baugruppe (G). Die Baugruppe ist nur komplett auszutauschen.
The parts marked with * belong to a subassembly (G). The subassemblymust be replaced complete.

A. Friedr.Flender AG, D 46393 Bocholt,
Tel.+ 49(0)2871/92-0, Fax+ 49(0)2871/922596, http://www.flender.com

Datum Date **05.05.2006**
Rev.:

Operating Instructions

BA 3000 EN 02.97

Centrifugal brakes of type **FB**
sizes 180 and 208

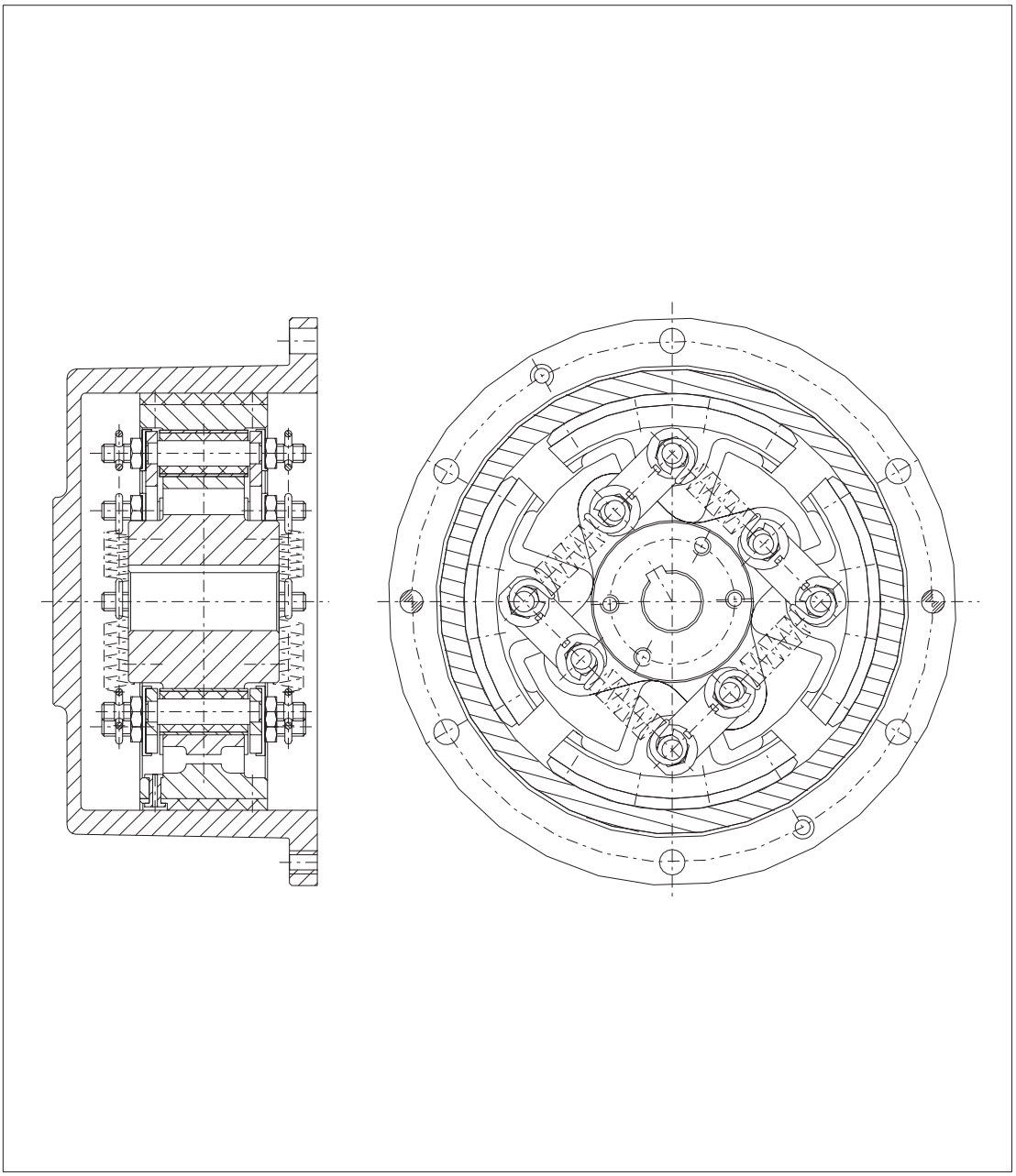

FLENDER

A. Friedr. Flender AG · 46393 Bocholt · Tel. 02871/92-0 · Telefax 02871/92-2596 · www.flender.com

Contents

1.	**Technical data**	**3**
1.1	General technical data	3
1.2	Brake torque	3
1.3	Idling speed	4
2.	**General notes**	**4**
2.1	General	4
3.	**Safety notes**	**5**
3.1	Safety notes	5
3.1.1	Notes and symbols in the operating instructions	5
4.	**Handling and storage**	**5**
4.1	Scope of supply	5
4.2	Handling	6
4.3	Storage	6
4.3.1	Storage of the centrifugal brake	6
4.3.2	Storage room	6
5.	**Technical description**	**6**
5.1	General description	6
6.	**Assembly**	**7**
6.1	General installation notes	7
6.2	Mounting the centrifugal brake	7
6.2.1	Assembly with one centrifugal unit	8
6.2.2	Assembly with one centrifugal unit and shaft seal	9
6.2.3	Assembly with two centrifugal units	10
6.2.4	Assembly with two centrifugal unit and shaft seal	11
7.	**Startup**	**12**
7.1	Measures before startup	12
8.	**Operation**	**12**
8.1	General operating data	12
9.	**Disturbances, reasons and remedy**	**12**
9.1	General	12
9.2	Possible malfunctions	12
10.	**Maintenance and repair**	**13**
10.1	General	13
10.2	Replacing the friction linings (5)	13
11.	**Spare parts stock, service facility addresses**	**15**
11.1	Service facility addresses	15
12.	**Declaration by the manufacturer**	**20**

1. Technical data

1.1 General technical data

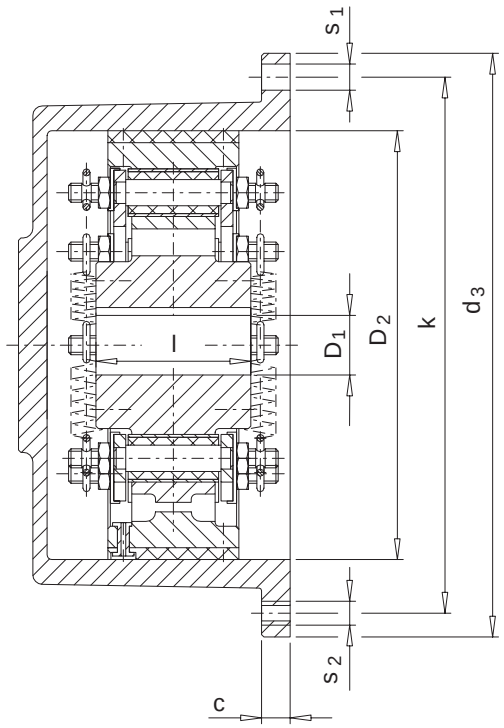

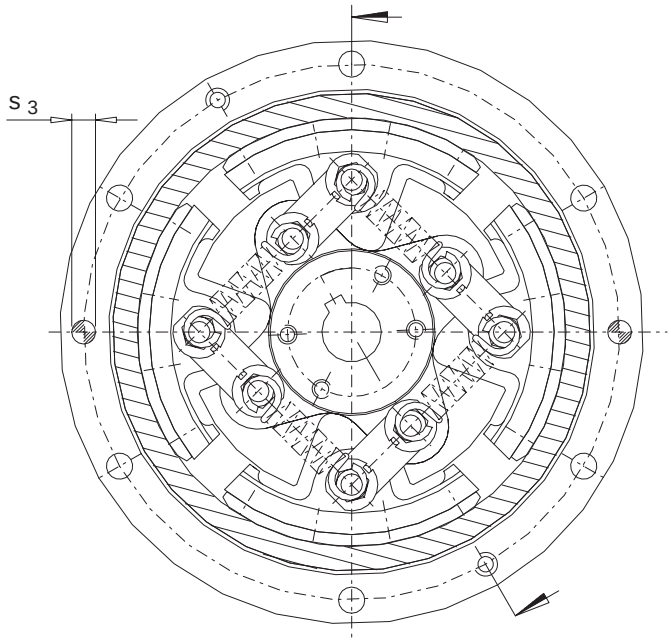

with one centrifugal unit

with two centrifugal units

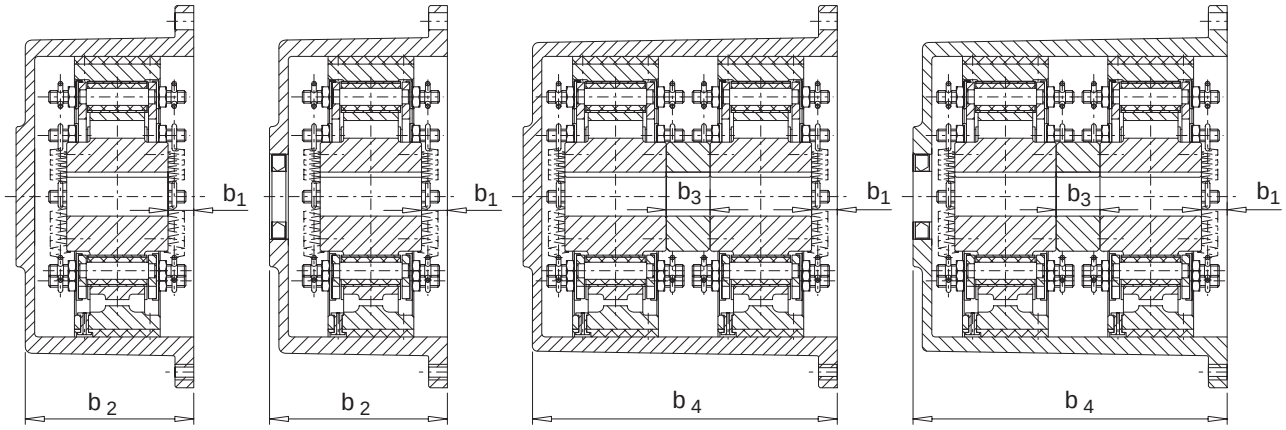

with shaft seal

with shaft seal

Size	D_1 max. mm	l mm	D_2 H7 mm	k mm	d_3 mm	c mm	s_1 mm	s_1 Quantity mm	s_2	s_2 Quantity mm	s_3 H7 mm	s_3 1) Quantity mm	b_1 mm	b_2 mm	b_3 mm	b_4 mm
180	45	65	180	225	245	12	11	6	M 10	2	10	2	16.5	114	20	195
208	55	100	208	260	285	14	14	6	M 12	2	10	2	12	140	20	259

Table 1.1: Dimensions of the centrifugal brake

1) Bored and reamed together with the counterpart

1.2 Brake torque

When designing the centrifugal brake, the brake torque should be higher than the input torque of the auxiliary gear unit.

Brake torque per centrifugal unit (2-10): Size 180: 300 Nm
Size 208: 500 Nm

1.3 Idling speed

When designing the centrifugal brake, the idling speed should be higher than the input speed of the auxiliary gear unit.

Size	Idling speed in 1/min				
180		1000	1200	1500	1800
208	900	1000	1200		

Table 1.2: Idling speeds

2. General notes

2.1 General

These Operating Instructions constitute part of the brake shipment and should be kept in the immediate vicinity of the brake at all times.

Only a precise knowledge of the Operating Instructios will ensure trouble-free operation of the brake. It is therefore in the interest of our customer that the Operating Instructions are read, understood and observed in all respects by the persons responsible for handling, installation and operation.

Note: We accept no liability for any damage or malfunction resulting from non-observance of the operating instructions.

The ”**brake**” dealt with in these operating instructions was developed for stationary use in general engineering.

The centrifugal brake is only designed for the field of application as specified in Section 1. ”Technical data”. Operating conditions which differ from the stated will require fresh contractual agreements.

The brake described here is in accordance with the state-of-the-art at the time of these Operating Instructions go into print.

In the interest of further development, we reserve the right to introduce modifications which, while retaining the essential features, can be regarded as desirable to increase its efficiency and safety.

The copyright of these Operating Instructions remains the property of **FLENDER AG.**

These operating instructions may not be duplicated in part or whole, utilized for the purpose of publicity or communicated to third parties without our expressed consent.

Please contact our works listed below in respect of all technical queries.

FLENDER AG Telephon: 02871/92-2800
D 46393 Bocholt Telefax: 02871/92-2801

or one of our service branches which are listed in Section 11. ”Stocking spare parts, service facility addresses”.

3. Safety notes

3.1 Safety notes

- The brake is constructed in accordance with the state-of-the-art and is reliable in the condition as shipped. Unauthorized modifications which impair its reliability are not permissible. This also applies to guards which are fitted as protection against accidential contact.
- The brake may only be used and operated within the scope of the condition specified in the contract of performance and supply.
- The customer should ensure that the persons entrusted with installation, operation, care and maintenance as well as repair have read and understood the operating instructions and observe them in all respects in order to:

  – prevent hazard to life and limb of the user and third parties

  – ensure the reliability of the brake

  and

  – prevent failure and environmental pollution due to incorrect handling.
- The relevant regulations concerning industrial safety and pollution control should be observed during handling, installation, operation as well as care and maintenance.
- The brake may only be operated, serviced and repaired by authorized, trained and properly instructed personnel.
- All works should be carried out with care with the safety aspect in mind.
- All works on the brake may only be carried out when it is stationary.
  The drive unit must be secured to prevent accidental startup (e.g.by locking the key switch or removing the fuses in the power supply). A notice should be displayed at the switch-on point stating that work is in progress on the brake.
- The drive unit should be shut off at once if changes in the brake are detected during operation, such as e.g. changed running noises.
- The brake must be protected by means of suitable guards to prevent accidental contact.
- During installation of the brake in units or systems, the manufacturer of the units or systems is obliged to incorporate the requirements, notes and descriptions contained in these Operating Instructions in his own operating instructions.

3.1.1 Notes and symbols in the operating instructions

Instructions in the operating instructions which concern operating safety are emphasized as follows:

⚠ This symbol draws attention tosafety measures which must be observed to prevent **personal injury**.

Caution! This symbol draws attention to safety measures which must be observed to prevent **damage to the brake**.

Note: This note draws attention to general **operating notes** which should be especially observed.

4. Handling and storage

4.1 Scope of supply

The scope of the shipment is listed in the shipping documents. They should be checked for completeness on receipt. Any shipping damage and/or missing parts should be reported in writing at once. After consulting FLENDER an expert is to be called in.

4.2 Handling

The packing of the brake will differ depending on method of shipment and size. The packing, unless otherwise agreed contractually, complies with **HPE Packing Guidelines**.

The symbols shown on the packing should be noted. Their meaning is as follows:

bild-transport

This way up	Fragile	Keep dry	Keep cool	Centre of gravity	Use no hand hook	Attach here

Caution! **Make sure that suitable hoists are used.**

4.3 Storage

4.3.1 Storage of the centrifugal brake

The centrifugal brake is delivered in a preserved state and can be stored in a covered dry place up to 6 months. If the brake shall be stored for a longer period of time, an appropriate long-term presveration is ncessary (consultation with FLENDER required).

Caution! **The friction linings (5) must be absolutely free from grease.**

4.3.2 Storage room

The storage room should be dry and dust-free. Most storage rooms are unsuitable. Make sure that no condensation develops. The relative humidity of air is most favourable below 65 %.

5. Technical description

5.1 General description

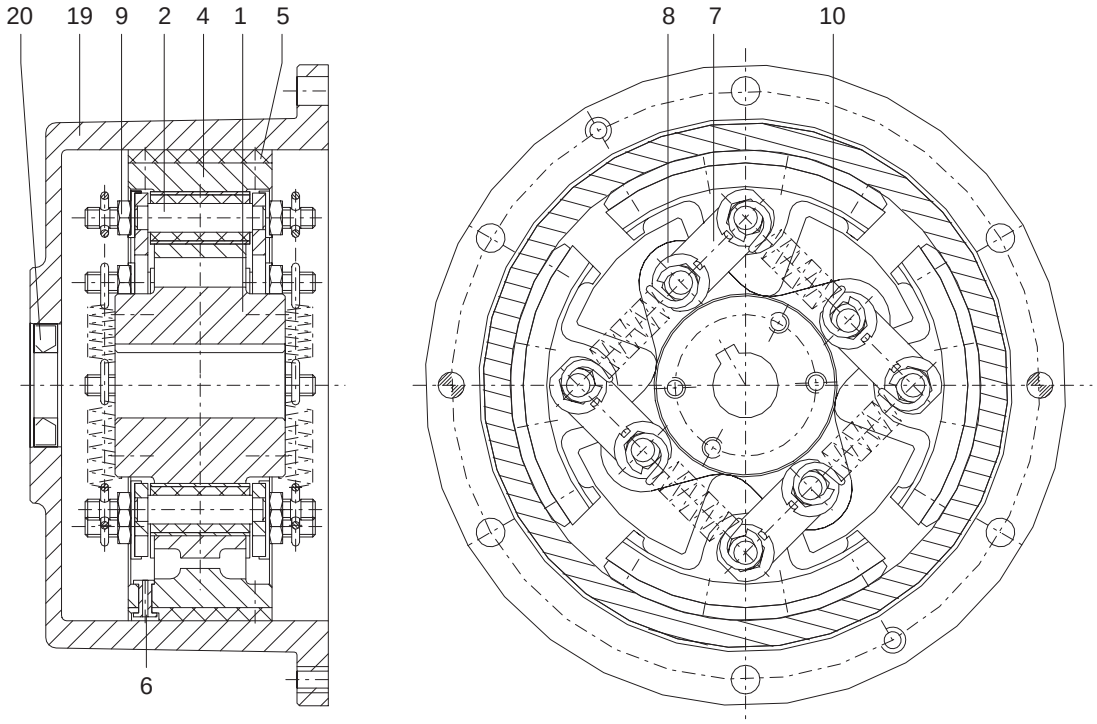

The centrifugal brakes are dependent on speed and direction of rotation.

The centrifugal brake limits the runaway speed on the input shaft of the auxiliary drive when the machine swings back (reverse operating direction of rotation and auxiliary drive switched on).

Mount the cam part (1) onto the input shaft of the auxiliary drive.

6. Assembly

6.1 General installation notes

For the installation the safety notes in Section 3. are to be observed.

The installation has to be carried out with utmost care by trained personnel.

Already during the planning phase it is to be observed that sufficient room is to be provided for the installation and later inspection and maintenance work.

Before starting the installation a sufficient number of hoists must be provided for.

6.2 Mounting the centrifugal brake

Before starting the assembly, thoroughly clean the shaft end as well as the parts of the centrifugal brake.

⚠ **Observe the manufactuer's instructions on handling the solvents.**

Caution! **The friction linings (5) as well as the braking surface inside the brake drum (19) must be absolutely free from grease.**

Slightly grease the remaining parts of the centrifugal brake as well as the shaft end.

Caution! **Before mounting the centrifugal brake onto the gear unit shaft, check the position of the tension springs (10).**

Braking direction opposite to the operating direction

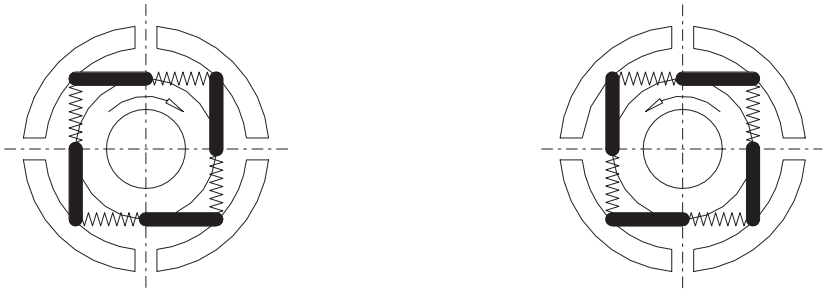

Mounting position for clockwise direction of rotation Mounting position for counterclockwise direction of rotation

View on the shaft face of the shaft onto which the brake is mounted.

6.2.1 Assembly with one centrifugal unit

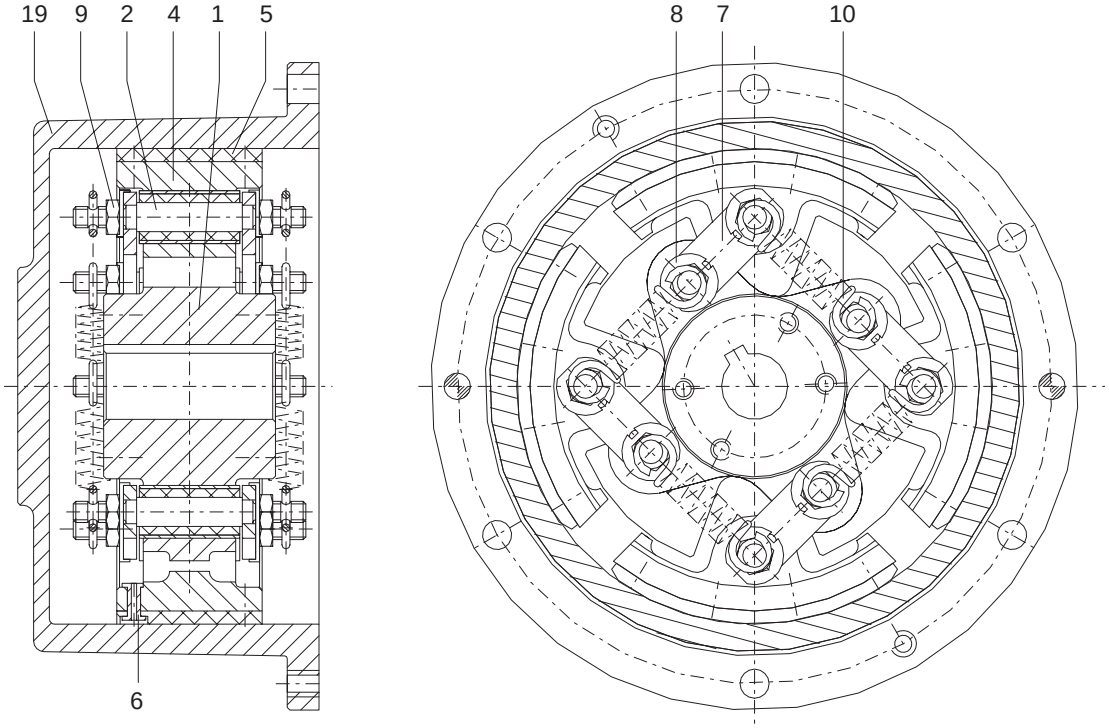

The cam part (1) is delivered complete with assembled centrifugal units (2-10).

Caution! **The complete cam part (1) should be fitted by means of suitable devices in order to prevent damage to the shaft bearing arrangement by the axial fitting force. Make sure that suitable hoists are used.**

Caution! **Observe the position of the tension springs (10) according to item 6.2.**

Warming up the cam part (1) (max. +50 °C) might make the fitting easier.

⚠ **Protect yourself against burns by hot parts!**

Axially secure the cam part (1) with an end plate or a circlip according to DIN 471.

Push the brake drum (19) over the friction linings (5) flush against the gear unit cover and secure it to the gear unit cover with screws and pins. Observe the data on the pin holes in Section 1., item 1.1.

6.2.2 Assembly with one centrifugal unit and shaft seal

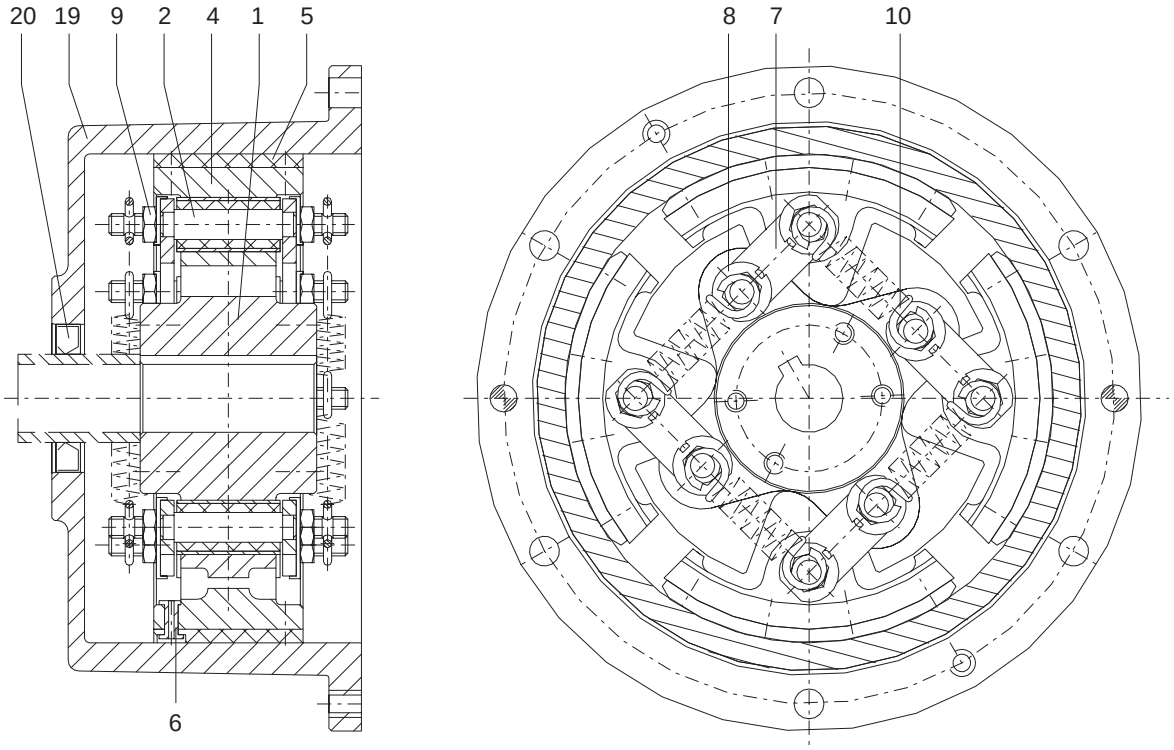

The cam part (1) is delivered complete with assembled centrifugal units (2-10).

Caution! **The complete cam part (1) should be fitted by means of suitable devices in order to prevent damage to the shaft bearing arrangement by the axial fitting force. Make sure that suitable hoists are used.**

Caution! **Observe the position of the tension springs (10) according to item 6.2.**

Warming up the cam part (1) (max. +50 °C) might make the fitting easier.

⚠ **Protect yourself against burns by hot parts!**

Slide the bush over the shaft flush against the cam part (1).

Caution! **Insert the sealing lip of the shaft seal (20) with grease.**

Install the shaft seal (20) into the brake drum (19). Slide the assembly (19, 20) over the friction linings (5) flush against the housing cover. Secure the brake drum (19) to the gear unit cover with screws and pins. Observe the data on the pin holes in Section 1., item 1.1.

Axially secure the cam part (1) through the bush by means of an end plate.

6.2.3 Assembly with two centrifugal units

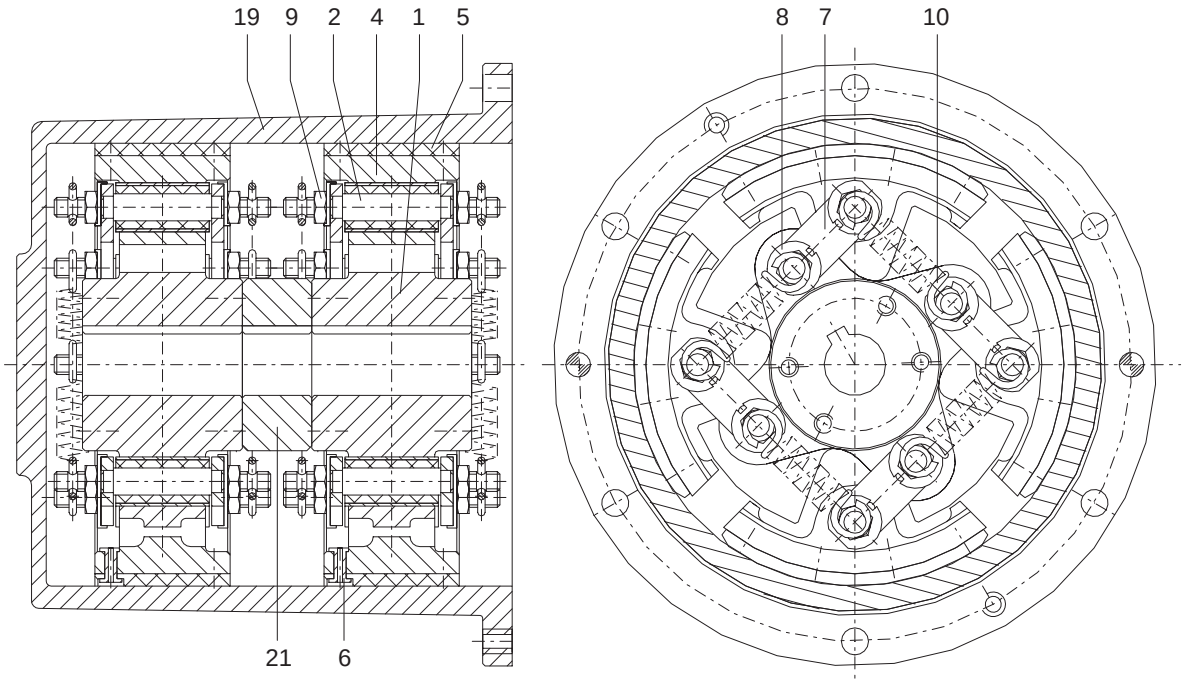

The cam parts (1) are delivered complete with centrifugal units (2-10).

Caution! **The complete inside cam part (1), the distance ring (21) and the complete outside cam part (1) should be fitted by means of suitable devices in order to prevent damage to the shaft bearing arrangement by the axial fitting force. Make sure that suitable hoists are used.**

Caution! **Observe the position of the tension springs (10) according to item 6.2. The two cam parts must be in the same position.**

Warming up the cam parts (1) (max. +50 °C) might make the fitting easier.

⚠ **Protect yourself against burns by hot parts!**

Axially secure cam parts (1) and distance ring (21) with an end plate or a circlip according to DIN 471.

Push the brake drum (19) over the friction linings (5) flush against the gear unit cover and secure it to the gear unit cover with screws and pins. Observe the data on the pin holes in Section 1., item 1.1.

6.2.4 Assembly with two centrifugal unit and shaft seal

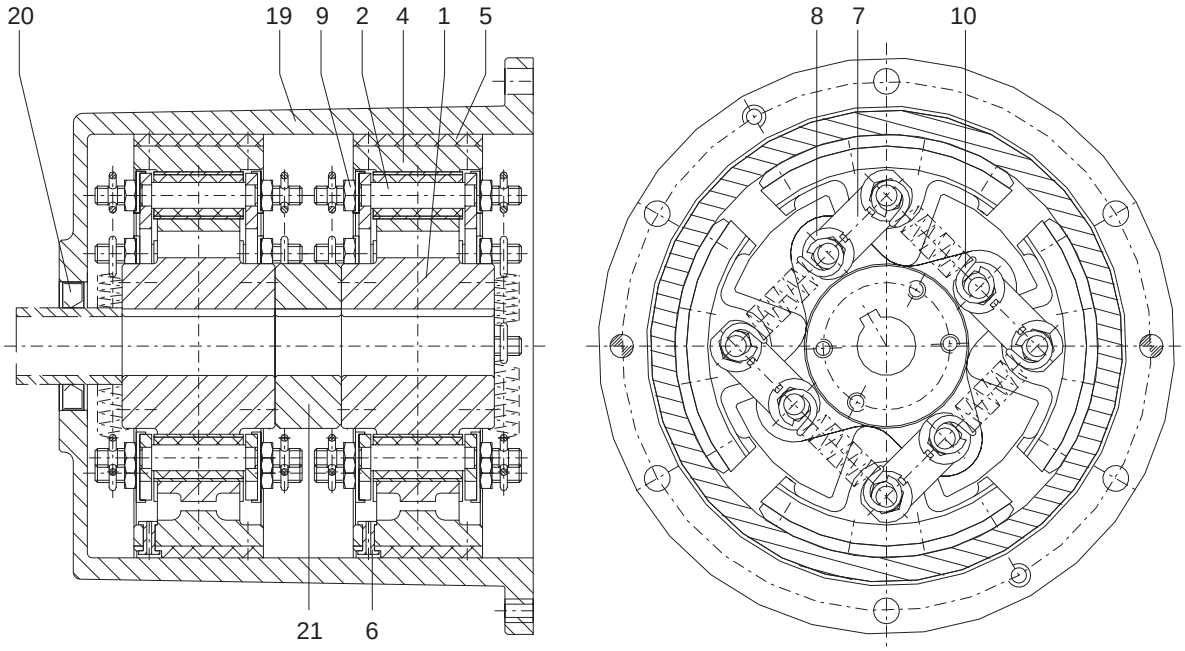

The cam parts (1) are delivered complete with centrifugal units (2-10).

Caution! **The complete inside cam part (1), the distance ring (21) and the complete outside cam part (1) should be fitted by means of suitable devices in order to prevent damage to the shaft bearing arrangement by the axial fitting force. Make sure that suitable hoists are used.**

Caution! **Observe the position of the tension springs (10) according to item 6.2. The two cam parts must be in the same position.**

Warming up the cam parts (1) (max. +50 °C) might make the fitting easier.

⚠ **Protect yourself against burns by hot parts!**

Axially secure cam parts (1) and distance ring (21) with an end plate or a circlip according to DIN 471.

Slide the bush over the shaft flush against the cam part (1).

Install the shaft seal (20) into the brake drum (19). Slide the assembly (19, 20) over the friction linings (5) flush against the housing cover. Secure the brake drum (19) to the gear unit cover with screws and pins. Observe the data on the pin holes in Section 1., item 1.1.

Caution! **Insert the sealing lip of the shaft seal (20) with grease.**

Axially secure the cam part (1) through the bush by means of an end plate.

7. Startup

7.1 Measures before startup

Before startup, check the screw connection of brake drum (19) and housing cover.

8. Operation

8.1 General operating data

During operation, the centrifugal brake should be checked for

– any changes in running noises

– a sudden temperature rise during operation in operating direction of rotation.

Caution!

If irregularities are detected during operation, the drive assembly should be set off immediately. The cause of the malfunction should be determined with the aid of the Troubleshooting Table (Section 9.).
The Troubleshooting Table lists possible malfunctions, their causes and suggestions for remedying them.
If the cause cannot be determined or there is no facility for repair with suitable equipment, we recommend calling in one of our service fitters (see Section 11.).

9. Disturbances, reasons and remedy

9.1 General

The malfunctions listed below can only be hints for a troubleshooting.

In case of a complex plant, all other components have always to be included in the troubleshooting.

The centrifugal brake has to run with low noise and without shaking in operating direction of rotation. Any deviating behaviour is to be regarded as malfunction and should be removed immediately.

⚠ **Before maintenance work, repairs or other work, the operator should make sure that the whole drive train is stationary. Especially the drive motors are to be secured against accidental start up.**
Futhermore, we refer to the relevant regulations on the prevention of accidents at the place of installation.

9.2 Possible malfunctions

Malfunction	Possible cause	Remedy
Sudden change in noise level and/or temperature rise of the brake drum (19) when turning in operating direction of rotation	Friction linings (5) worn and/or tension springs (10) overstretched	Shut down the plant Check friction linings (5) and tension spirngs (10) and replace damaged parts

10. Maintenance and repair

10.1 General

Caution! **Carry out maintenance work only with the complete machine system stationary.**

If provided with shaft seal (20), the sealing lip of the shaft seal (20) should be relubricated every three months.

After every second or third braking (swinging back of the machine), check the friction linings (5). For this purpose, the brake drum (19) has to be dismounted.

The friction linings (5) must have a min. thickness of 2.5 mm.

Caution! **When less than 2.5 mm, replace the friction linings (5).**
We recommend to replace the tension springs (10) at the same time.

Caution! **Replace the friction linings (5) in sets for the complete centrifugal brake.**

10.2 Replacing the friction linings (5)

Remove the brake drum (19) from the gear unit cover.

Caution! **Before continuing the disassembly of the centrifugal brake, mark the position of the centrifugal weights (4) in relation to the cam part (1) in continuous order.**

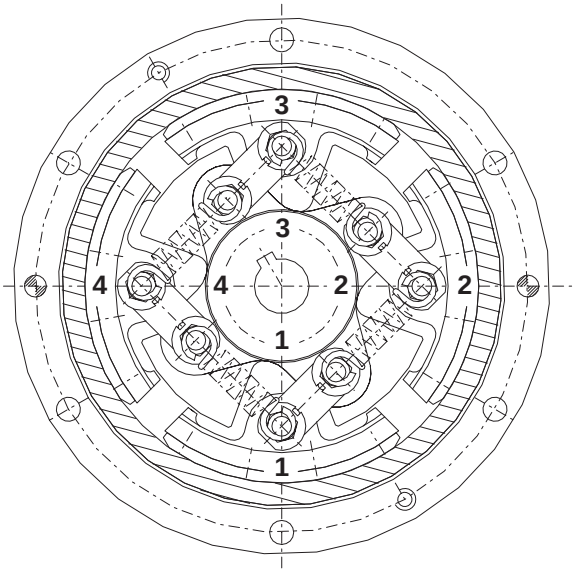

Pull off the complete cam part (1) together with the centrifugal unit (2-10) from the gear unit shaft by means of a suitable pull-off device.

Remove tension springs (10).

Caution! **Be careful with the recoiling tension springs (10).**

Loosen locking plates (8), screw off nuts (9), remove centrifugal weight (4) together with assembled rubber-metal bolt (2) and lever (7).

Remove tubular rivet (6) and friction linings (5).

Clean all parts from abraded particles.

⚠ **Observe the manufactuer's instructions on handling the solvents.**

Rivet the new friction linings (5) to the centrifugal weights (4, 7) with new tubular rivets (6).

Caution! **The friction linings (5) as well as the braking surface inside the brake drum (19) must be absolutely free from grease.**

Slightly grease the remaining parts of the centrifugal brake as well as the shaft end.

Place the centrifugal weights (4, 7) into the recesses in the cam part (1).

Caution! **Observe the marks on the cam part (1) and the centrifugal weights.**

Mount the locking plates (8) and slightly tighten the nuts (9).

Caution! **Before tightening the nuts (9) securely, place strips of 1 mm between the locating surfaces of cam part (1) and centrifugal weight (4).**

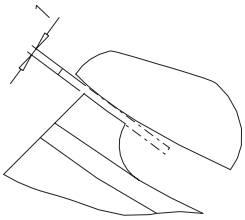

Tighten the nuts (9) and secure them with locking plates (8).

Tightening torque T_A :	Size 180:	25 Nm
	Size 208:	86 Nm

Caution! **Remove strips.**

Install tension springs (10).

Caution! **Do not overstretch the tension springs (10).**

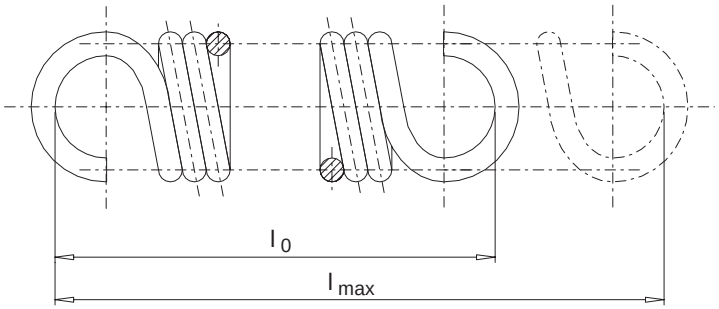

Length l_{max} of tension springs:	Size 180:	60 mm
	Size 208:	75 mm

Mount the cam part (1) complete with centrifugal units (2-10) and assemble the brake drum (19) with/without shaft seal (20) according to Section 6.

11. Spare parts stock, service facility addresses

Maintaining a stock of the most essential spare and wear parts is an important prerequisite for the permanent serviceability of the centrifugal brake.

When ordering spare parts, the following data should be stated:

– Part No. (see Section 5.)

– Description / Size

– Quantity

We assume warranty only for original spare parts supplied by us.

Caution! **We would expressly draw attention to the fact that spare parts and accessories not supplied by us have not been tested or approved by us either. Fitting and/or use of such products can therefore under certain circumstances adversely affect structurally specified properties of the centrifugal brake and will thus impair active and/or passive safety. No form of reliability or warranty will be assumed by FLENDER for damage occasioned by use of non-original spare parts and accessories.**

Please note that production and supply specifications frequently exist for components and we will always offer spare parts in accordance with the state of the art and in accordance with the latest legal requirements.

11.1 Service facility addresses

When ordering spare parts or requesting a service fitter, please contact FLENDER AG first of all.

FLENDER Germany

A. FRIEDR. FLENDER AG
46393 Bocholt - Tel.: (0 28 71) 92-0 - Fax: (0 28 71) 92 25 96
E-mail: contact@flender.com • www.flender.com
Shipping address: Alfred - Flender - Strasse 77 - 46395 Bocholt

A. FRIEDR. FLENDER AG - Kupplungswerk Mussum
Industriepark Bocholt - Schlavenhorst 100 - 46395 Bocholt - Tel.: (0 28 71) 92 28 68 - Fax: (0 28 71) 92 25 79
E-mail: couplings@flender.com • www.flender.com

A. FRIEDR. FLENDER AG - Werk Friedrichsfeld
Am Industriepark 2 - 46562 Voerde - Tel.: (0 28 71) 92-0 - Fax: (0 28 71) 92 25 96
E-mail: contact@flender.com • www.flender.com

A. FRIEDR. FLENDER AG - Getriebewerk Penig
Thierbacher Strasse 24 - 09322 Penig - Tel.: (03 73 81) 60 - Fax: (03 73 81) 8 02 86
E-mail: ute.tappert@flender.com • www.flender.com

FLENDER - TÜBINGEN GMBH
72007 Tübingen - Tel.: (0 70 71) 7 07-0 - Fax: (0 70 71) 70 74 00
E-mail: sales-motox@flender-motox.com • www.flender.com
Shipping address: Bahnhofstrasse 40 - 72072 Tübingen

LOHER GMBH
94095 Ruhstorf - Tel.: (0 85 31) 3 90 - Fax: (0 85 31) 3 94 37
E-mail: info@loher.de • www.loher.de
Shipping address: Hans-Loher-Strasse 32 - 94099 Ruhstorf

FLENDER SERVICE GMBH
44607 Herne - Tel.: (0 23 23) 940-0 - Fax: (0 23 23) 940 333
E-mail: infos@flender-service.com • www.flender-service.com
24h Service Hotline +49 (0) 17 22 81 01 00
Shipping address: Südstrasse 111 - 44625 Herne

A. FRIEDR. FLENDER AG - FLENDER GUSS
Obere Hauptstrasse 228-230 - 09228 Chemnitz / Wittgensdorf - Tel.: (0 37 22) 64-0 - Fax: (0 37 22) 64 21 89
E-mail: flender.guss@flender-guss.com • www.flender-guss.de

Germany

A. FRIEDR. FLENDER AG
46393 BOCHOLT - TEL.: (0 28 71) 92 - 0 - FAX: (0 28 71) 92 25 96
SHIPPING ADDRESS: ALFRED - FLENDER - STRASSE 77 - 46395 BOCHOLT

E-mail: contact@flender.com • www.flender.com

VERTRIEBSZENTRUM BOCHOLT
46393 Bocholt
Alfred-Flender-Strasse 77, 46395 Bocholt
Tel.: (0 28 71) 92 - 0
Fax: (0 28 71) 92 - 14 35
E-mail: vz.bocholt@flender.com

VERTRIEBSZENTRUM STUTTGART
70472 Stuttgart
Friolzheimer Strasse 3, 70499 Stuttgart
Tel.: (07 11) 7 80 54 - 51
Fax: (07 11) 7 80 54 - 50
E-mail: vz.stuttgart@flender.com

VERTRIEBSZENTRUM MÜNCHEN
85750 Karlsfeld
Liebigstrasse 14, 85757 Karlsfeld
Tel.: (0 81 31) 90 03 - 0
Fax: (0 81 31) 90 03 - 33
E-mail: vz.muenchen@flender.com

VERTRIEBSZENTRUM BERLIN
Schlossallee 8, 13156 Berlin
Tel.: (0 30) 91 42 50 58
Fax: (0 30) 47 48 79 30
E-mail: vz.berlin@flender.com

FLENDER International

(2003-12-01)

E U R O P E

AUSTRIA
Flender Ges.m.b.H.
Industriezentrum Nö-Süd
Strasse 4, Objekt 14, Postfach 132
2355 Wiener Neudorf
Phone: +43 (0) 22 36 6 45 70
Fax: +43 (0) 22 36 6 45 70 10
E-mail: office@flender.at
www.flender.at

BELGIUM & LUXEMBOURG
N.V. Flender Belge S.A.
Cyriel Buyssestraat 130
1800 Vilvoorde
Phone: +32 (0) 2 - 2 53 10 30
Fax: +32 (0) 2 - 2 53 09 66
E-mail: sales@flender.be

BULGARIA
A. Friedr. Flender AG
Branch Office
c/o Auto - Profi GmbH
Alabin Str., 1000 Sofia
Phone: +359 (0) 2 - 9 80 66 06
Fax: +359 (0) 2 - 9 80 33 01
E-mail: sofia@auto-profi.com

CROATIA / SLOVENIA
BOSNIA-HERZEGOVINA
A. Friedr. Flender AG
Branch Office
c/o HUM - Naklada d.o.o.
Mandroviceva 3, 10000 Zagreb
Phone: +385 (0) 1 - 2 30 60 25
Fax: +385 (0) 1 - 2 30 60 24
E-mail: flender@hi.hinet.hr

CZECH REPUBLIC
A. Friedr. Flender AG
Branch Office
Hotel DUO, Teplicka 17
19000 Praha 9
Phone: +420 (0) 2 - 83 88 23 00
Fax: +420 (0) 2 - 83 88 22 05
E-mail: flender_pumprla@hotelduo.cz

DENMARK
Flender Scandinavia A/S
Rugmarken 35 B, 3520 Farum
Phone: +45 - 70 22 60 03
Fax: +45 - 44 99 16 62
E-mail: kontakt@flenderscandinavia.com
www.flenderscandinavia.com

ESTHONIA / LATVIA / LITHUANIA
Flender Branch Office
Addinol Mineralöl Marketing OÜ
Suur-Söjamäe 32
11415 Tallinn / Esthonia
Phone: +372 (0) 6 - 27 99 99
Fax: +372 (0) 6 - 27 99 90
E-mail: flender@addinol.ee
www.addinol.ee

FINLAND
Flender Oy
Ruosilantie 2 B, 00390 Helsinki
Phone: +358 (0) 9 - 4 77 84 10
Fax: +358 (0) 9 - 4 36 14 10
E-mail: webmaster@flender.fi
www.flender.fi

FRANCE
Flender s.a.r.l.
3, rue Jean Monnet - B.P. 5
78996 Elancourt Cedex
Phone: +33 (0) 1 - 30 66 39 00
Fax: +33 (0) 1 - 30 66 35 13
E-mail: sales@flender.fr

SALES OFFICES:
Flender s.a.r.l.
36, rue Jean Broquin
69006 Lyon
Phone: +33 (0) 4 - 72 83 95 20
Fax: +33 (0) 4 - 72 83 95 39
E-mail: sales@flender.fr

Flender - Graffenstaden SA
1, rue du Vieux Moulin
67400 Illkirch-Graffenstaden
B.P. 84
67402 Illkirch - Graffenstaden
Phone: +33 (0) 3 - 88 67 60 00
Fax: +33 (0) 3 - 88 67 06 17
E-mail: flencomm@flender-graff.com

GREECE
Flender Hellas Ltd.
2, Delfon str., 11146 Athens
Phone: +30 210 - 2 91 72 80
Fax: +30 210 - 2 91 71 02
E-mail: flender@otenet.gr

Mangrinox S.A.
14, Grevenon str., 11855 Athens
Phone: +30 210 - 3 42 32 01
Fax: +30 210 - 3 45 99 28
E-mail: mangrinox@otenet.gr

HUNGARY
A. Friedr. Flender AG
Branch Office
Bécsi Út 3-5, 1023 Budapest
Phone: +36 (0) 1 - 3 45 07 90 / 91
Fax: +36 (0) 1 - 3 45 07 92
E-mail: jambor.laszlo@axelero.hu

ITALY
Flender Cigala S.p.A.
Parco Tecnologico Manzoni
Palazzina G
Viale delle industrie, 17
20040 Caponago (MI)
Phone: +39 (0) 02 - 95 96 31
Fax: +39 (0) 02 -95 74 39 30
E-mail: info@flendercigala.it

THE NETHERLANDS
Flender Nederland B.V.
Industrieterrein Lansinghage
Platinastraat 133
2718 ST Zoetermeer
Postbus 725
2700 AS Zoetermeer
Phone: +31 (0) 79 - 3 61 54 70
Fax: +31 (0) 79 - 3 61 54 69
E-mail: sales@flender.nl
www.flender.nl

SALES OFFICES:
Flender Nederland B.V.
Lage Brink 5-7
7317 BD Apeldoorn
Postbus 1073
7301 BH Apeldoorn
Phone: +31 (0) 55 - 5 27 50 00
Fax: +31 (0) 55 - 5 21 80 11
E-mail: tom.alberts@flender-group.com

Bruinhof B.V.
Boterdiep 37
3077 AW Rotterdam
Postbus 9607
3007 AP Rotterdam
Phone: +31 (0) 10 - 4 97 08 08
Fax: +31 (0) 10 - 4 82 43 50
E-mail: info@bruinhof.nl
www.bruinhof.nl

NORWAY
Elektroprosess AS
Frysjaveien 40, 0884 Oslo
Postboks 165, Kjelsås
0411 Oslo
Phone: +47 (0) 2 - 2 02 10 30
Fax: +47 (0) 2 - 2 02 10 50 / 51
E-mail: post@elektroprosess.no

POLAND
A. Friedr. Flender AG
Branch Office
Przedstawicielstwo w Polsce
ul. Wyzwolenia 27
43 - 190 Mikolów
Phone: +48 (0) 32 - 2 26 45 61
Fax: +48 (0) 32 - 2 26 45 62
E-mail: flender@pro.onet.pl
www.flender.pl

PORTUGAL
Rodamientos FEYC, S.A
R. Jaime Lopes Dias, 1668 CV
1750 - 124 Lissabon
Phone: +351 (0) 21 - 7 54 24 10
Fax: +351 (0) 21 - 7 54 24 19
E-mail: info@rfportugal.com

ROMANIA
A. Friedr. Flender AG
Branch Office
98 - 106, Soseaua Mihai Bravu
Sector 2, Bloc D 16, Sc 1, Apartament 4
021331 Bucuresti - 2
Phone: +40 (0) 21 - 4 91 10 08
Fax: +40 (0) 21 - 4 91 10 08
E-mail: flender@fx.ro

RUSSIA
F & F GmbH
Tjuschina 4-6
191119 St. Petersburg
Phone: +7 (0) 8 12 - 3 20 90 34
Fax: +7 (0) 8 12 - 3 40 27 60
E-mail: flendergus@mail.spbnit.ru

SLOVAKIA
A. Friedr. Flender AG
Branch Office
Vajanského 49
P.O. Box 286, 08001 Presov
Phone: +421 (0) 51 - 7 70 32 67
Fax: +421 (0) 51 - 7 70 32 67
E-mail: micenko.flender@nextra.sk

SPAIN
Flender Ibérica S.A.
Poligono Industrial San Marcos
Calle Morse, 31 (Parcela D-15)
28906 Getafe - Madrid
Phone: +34 (0) 91 - 6 83 61 86
Fax: +34 (0) 91 - 6 83 46 50
E-mail: f-iberica@flender.es
www.flender.es

SWEDEN
Flender Scandinavia
Äsenvägen 2
44339 Lerum
Phone: +46 (0) 302 - 1 25 90
Fax: +46 (0) 302 - 1 25 56
E-mail: kontakt@flenderscandinavia.com
www.flenderscandinavia.com

SWITZERLAND
Flender AG
Zeughausstr. 48
5600 Lenzburg
Phone: +41 (0) 62 8 85 76 00
Fax: +41 (0) 62 8 85 76 76
E-mail: info@flender.ch
www.flender.ch

TURKEY
Flender Güc Aktarma Sistemleri
Sanayi ve Ticaret Ltd. Sti.
IMES Sanayi, Sitesi
E Blok 502. Sokak No. 22
81260 Dudullu - Istanbul
Phone: +90 (0) 2 16 - 4 66 51 41
Fax: +90 (0) 2 16 3 64 59 13
E-mail: cuzkan@flendertr.com
www.flendertr.com

UKRAINE
A. Friedr. Flender AG
Branch Office, c/o DIV - Deutsche Industrie-
vertretung, Prospect Pobedy 44
252057 Kiev
Phone: +380 (0) 44 - 4 46 80 49
Fax: +380 (0) 44 - 2 30 29 30
E-mail: flender@div.kiev.ua

UNITED KINGDOM & EIRE
Flender Power Transmission Ltd.
Thornbury Works, Leeds Road
Bradford
West Yorkshire BD3 7EB
Phone: +44 (0) 12 74 65 77 00
Fax: +44 (0) 12 74 66 98 36
E-mail: flenders@flender-power.co.uk
www.flender-power.co.uk

SERBIA-MONTENEGRO
ALBANIA / MACEDONIA
A. Friedr. Flender AG
Branch Office
c/o G.P.Inzenjering d.o.o.
III Bulevar 54 / 19
11070 Novi Beograd
Phone: +381 (0) 11 - 60 44 73
Fax: +381 (0) 11 - 3 11 67 91
E-mail: flender@eunet.yu

A F R I C A

NORTH AFRICAN COUNTRIES
Please refer to Flender s.a.r.l.
3, rue Jean Monnet - B.P. 5
78996 Elancourt Cedex
Phone: +33 (0) 1 - 30 66 39 00
Fax: +33 (0) 1 - 30 66 35 13
E-mail: sales@flender.fr

EGYPT
Sons of Farid Hassanen
81 Matbaa Ahlia Street
Boulac 11221, Cairo
Phone: +20 (0) 2 - 5 75 15 44
Fax: +20 (0) 2 - 5 75 17 02
E-mail: hussein@sonfarid.com

SOUTH AFRICA
Flender Power Transmission (Pty.) Ltd.
Cnr. Furnace St & Quality Rd.
P.O. Box 131, Isando 1600
Johannesburg
Phone: +27 (0) 11 - 5 71 20 00
Fax: +27 (0) 11 - 3 92 24 34
E-mail: sales@flender.co.za
www.flender.co.za

SALES OFFICES:
Flender Power Transmission (Pty.) Ltd.
Unit 3 Marconi Park
9 Marconi Crescent, Montague Gardens
P.O. Box 37291
Chempet 7442, Cape Town
Phone: +27 (0) 21 - 5 51 50 03
Fax: +27 (0) 21 - 5 52 38 24
E-mail: sales@flender.co.za

Flender Power Transmission (Pty.) Ltd.
Unit 3 Goshawk Park
Falcon Industrial Estate
P.O. Box 1608
New Germany 3620, Durban
Phone: +27 (0) 31 - 7 05 38 92
Fax: +27 (0) 31 - 7 05 38 72
E-mail: sales@flender.co.za

Flender Power Transmission (Pty.) Ltd.
9 Industrial Crescent, Ext. 25
P.O. Box 17609, Witbank 1035
Phone: +27 (0) 13 - 6 92 34 38
Fax: +27 (0) 13 - 6 92 34 52
E-mail: sales@flender.co.za

Flender Power Transmission (Pty.) Ltd.
Unit 14 King Fisher Park, Alton
Cnr. Ceramic Curve & Alumina Allee
P.O. Box 101995
Meerensee 3901, Richards Bay
Phone: +27 (0) 35 - 7 51 15 63
Fax: +27 (0) 35 - 7 51 15 64
E-mail: sales@flender.co.za

A M E R I C A

ARGENTINA
Chilicote S.A.
Avda. Julio A. Roca 546
C 1067 ABN Buenos Aires
Phone: +54 (0) 11 - 43 31 66 10
Fax: +54 (0) 11 - 43 31 42 78
E-mail: chilicote@chilicote.com.ar

BRASIL
Flender Brasil Ltda.
Rua Quatorze, 60 - Cidade Industrial
32211 - 970, Contagem - MG
Phone: +55 (0) 31 - 33 69 21 00
Fax: +55 (0) 31 - 33 69 21 66
E-mail: vendas@flenderbrasil.com

SALES OFFICES:
Flender Brasil Ltda.
Rua James Watt, 142
conj. 142 - Brooklin Novo
04576 - 050, São Paulo - SP
Phone: +55 (0) 11 - 55 05 99 33
Fax: +55 (0) 11 - 55 05 30 10
E-mail: flesao@uol.com.br

Flender Brasil Ltda.
Rua Campos Salles, 1095
sala 04 - Centro 14015 - 110,
Ribeirão Preto - SP
Phone: +55 (0) 16 - 6 35 15 90
Fax: +55 (0) 16 - 6 35 11 05
E-mail: flender.ribpreto@uol.com.br

CANADA
Flender Power Transmission Inc.
215 Shields Court, Units 4 - 6
Markham, Ontario L3R 8V2
Phone: +1 (0) 9 05 - 3 05 10 21
Fax: +1 (0) 9 05 - 3 05 10 23
E-mail: flender@ca.inter.net
www.flenderpti.com

SALES OFFICE:
Flender Power Transmission Inc.
34992 Bemina Court
Abbotsford - Vancouver
B.C. V3G 1C2
Phone: +1 (0) 6 04 - 8 59 66 75
Fax: +1 (0) 6 04 - 8 59 68 78
E-mail: tvickers@rapidnet.net

CHILE / ARGENTINA / BOLIVIA
ECUADOR / PARAGUAY / URUGUAY
Flender Cono Sur Limitada
Avda. Galvarino Gallardo 1534
Providencia, Santiago
Phone: +56 (0) 2 - 2 35 32 49
Fax: +56 (0) 2 - 2 64 20 25
E-mail: flender@flender.cl
www.flender.cl

COLOMBIA
A.G.P. Representaciones Ltda.
Flender Liaison Office Colombia
Av Boyaca No 23A
50 Bodega UA 7-1, Bogotá
Phone: +57 (0) 1 - 5 70 63 53
Fax: +57 (0) 1 - 5 70 73 35
E-mail: aguerrero@agp.com.co
www.agp.com.co

MEXICO
Flender de Mexico S.A. de C.V.
17, Pte, 713 Centro
72000 Puebla
Phone: +52 (0) 2 22 - 2 37 19 00
Fax: +52 (0) 2 22 - 2 37 11 33
E-mail: szugasti@flendermexico.com
www.flendermexico.com

SALES OFFICES:
Flender de Mexico S.A. de C.V.
Lago Nargis No. 38
Col. Granada,
11520 Mexico, D.F.
Phone: +52 (0) 55 - 52 54 30 37
Fax: +52 (0) 55 - 55 31 69 39
E-mail: info@flendermexico.com

Flender de Mexico S.A. de C.V.
Ave. San Pedro No. 231-5
Col. Miravalle
64660 Monterrey, N.L.
Phone: +52 (0) 81 - 83 63 82 82
Fax: +52 (0) 81 - 83 63 82 83
E-mail: info@flendermexico.com

PERU
Potencia Industrial E.I.R.L.
Calle Victor González Olaechea N° 110
Urb. La Aurora - Miraflores,
P.O.Box: Av. 2 de Mayo N° 679
Of.108-Miraflores
Casilla N° 392, Lima 18
Phone: +51 (0) 1 - 2 42 84 68
Fax: +51 (0) 1 - 2 42 08 62
E-mail: cesarzam@chavin.rcp.net.pe

USA
Flender Corporation
950 Tollgate Road
P.O. Box 1449, Elgin, IL. 60123
Phone: +1 (0) 8 47 - 9 31 19 90
Fax: +1 (0) 8 47 - 9 31 07 11
E-mail: flender@flenderusa.com
www.flenderusa.com

Flender Corporation
Service Centers West
4234 Foster Ave.
Bakersfield, CA. 93308
Phone: +1 (0) 6 61 - 3 25 44 78
Fax: +1 (0) 6 61 - 3 25 44 70
E-mail: flender1@lightspeed.net

VENEZUELA
F. H. Transmisiones S.A.
Urbanización Buena Vista
Calle Johan Schafer o Segunda Calle
Municipio Sucre, Petare
Caracas
Phone: +58 (0) 2 - 21 52 61
Fax: +58 (0) 2 - 21 18 38
E-mail: fhtransm@telcel.net.ve
www.fhtransmisiones.com

A S I A

BANGLADESH / SRI LANKA
Please refer to Flender Limited
No. 2 St. George's Gate Road
5th Floor, Hastings
Kolkata - 700 022
Phone: +91 (0) 33 - 2 23 05 45
Fax: +91 (0) 33 - 2 23 18 57
E-mail: flender@flenderindia.com

PEOPLE'S REPUBLIC OF CHINA
Flender Power Transmission
(Tianjin) Co. Ltd.
ShuangHu Rd.- Shuangchen Rd. West
Beichen Economic Development
Area (BEDA)
Tianjin 300400
Phone: +86 (0) 22 - 26 97 20 63
Fax: +86 (0) 22 - 26 97 20 61
E-mail: flender@flendertj.com
www.flendertj.com

Flender Power Transmission
(Tianjin) Co. Ltd.
Beijing Office
C-415, Lufthansa Center
50 Liangmaqiao Road, Chaoyang District
Beijing 100016
Phone: +86 (0) 10 - 64 62 21 51
Fax: +86 (0) 10 - 64 62 21 43
E-mail: beijing@flenderprc.com.cn

Flender Power Transmission
(Tianjin) Co. Ltd.
Shanghai Office
1101-1102 Harbour Ring Plaza
18 Xizang Zhong Rd.
Shanghai 200 001
Phone: +86 (0) 21 - 53 85 31 48
Fax: +86 (0) 21 - 53 85 31 46
E-mail: shanghai@flenderprc.com.cn

Flender Power Transmission
(Tianjin) Co. Ltd.
Wuhan Office
Rm. 1503, Jianyin Building,
709 Jianshedadao
Wuhan 430 015
Phone: +86 (0) 27 - 85 48 67 15
Fax: +86 (0) 27 - 85 48 68 36
E-mail: wuhan@flenderprc.com.cn

Flender Power Transmission
(Tianjin) Co. Ltd.
Guangzhou Office
Rm. 2802, Guangzhou International
Electronics Tower
403 Huanshi Rd. East
Guangzhou 510 095
Phone: +86 (0) 20 - 87 32 60 42
Fax: +86 (0) 20 - 87 32 60 45
E-mail: guangzhou@flenderprc.com.cn

Flender Power Transmission
(Tianjin) Co. Ltd.
Chengdu Office
G-6 / F Guoxin Mansion,
77 Xiyu Street
Chengdu 610 015
Phone: +86 (0) 28 - 86 19 83 72
Fax: +86 (0) 28 - 86 19 88 10
E-mail: chengdu@flenderprc.com.cn

Flender Power Transmission
(Tianjin) Co. Ltd.
Shenyang Office
Rm. 2-163, Tower I, City Plaza Shenyan
206 Nanjing Street (N), Heping District
Shenyang 110 001
Phone: +86 (0) 24 - 23 34 20 48
Fax: +86 (0) 24 - 23 34 20 46
E-mail: shenyang@flenderprc.com.cn

Flender Power Transmission
(Tianjin) Co. Ltd.
Xi'an Office
Rm. 302, Shaanzi Zhong Da
International Mansion
30 Southern Rd.
Xi'an 710 002
Phone: +86 (0) 29 - 7 20 32 68
Fax: +86 (0) 29 - 7 20 32 04
E-mail: xian@flenderprc.com.cn

INDIA
Flender Limited
Head Office:
No. 2 St. George's Gate Road
5th Floor, Hastings
Kolkata - 700 022
Phone: +91 (0) 33 - 22 23 05 45
Fax: +91 (0) 33 - 22 23 08 30
E-mail: flender@flenderindia.com

Flender Limited
Industrial Growth Centre
Rakhajungle, Nimpura
Kharagpur - 721 302
Phone: +91 (0) 3222 - 23 33 07
Fax: +91 (0) 3222 - 23 33 64
E-mail: works@flenderindia.com

SALES OFFICES:
Flender Limited
Eastern Regional Sales Office
No. 2 St. George's Gate Road
5th Floor, Hastings
Kolkata - 700 022
Phone: +91 (0) 33 - 22 23 05 45
Fax: +91 (0) 33 - 22 23 08 30
E-mail: ero@flenderindia.com

Flender Limited
Western Regional Sales Office
Plot No. 23, Sector 19 - C
Vashi, Navi Mumbai - 400 705
Phone: +91 (0) 22 - 27 65 72 27
Fax: +91 (0) 22 - 27 65 72 28
E-mail: wro@flenderindia.com

Flender Limited
Southern Regional Sales Office
41 Nelson Manickam Road
Aminjikarai,
Chennai - 600 029
Phone: +91 (0) 44 - 23 74 39 21
Fax: +91 (0) 44 - 23 74 39 19
E-mail: sro@flenderindia.com

Flender Limited
Northern Regional Sales Office
209-A, Masjid Moth, 2nd Floor
(Behind South Extension II)
New Delhi - 110 049
Phone: +91 (0) 11 - 26 25 02 21
Fax: +91 (0) 11 - 26 25 63 72
E-mail: nro@flenderindia.com

INDONESIA
Flender Singapore Pte. Ltd.
Representative Office
Perkantoran Puri Niaga II
Jalan Puri Kencana Blok J1
No. 2i, Kembangan
Jakarta Barat 11610
Phone: +62 (0) 21 - 5 82 86 24
Fax: +62 (0) 21 - 5 82 86 23
E-mail: bobwall@cbn.net.id

IRAN
Cimaghand Co. Ltd.
P.O. Box 15745-493
No. 13, 16th East Street
Beyhaghi Ave., Argentina Sq.
Tehran 15156
Phone: +98 (0) 21 - 8 73 02 14
Fax: +98 (0) 21 - 8 73 39 70
E-mail: info@cimaghand.com

ISRAEL
Greenshpon Engineering Works Ltd.
Haamelim Street 20
P.O. Box 10108, 26110 Haifa
Phone: +972 (0) 4 - 8 72 11 87
Fax: +972 (0) 4 - 8 72 62 31
E-mail: sales@greenshpon.com
www.greenshpon.com

JAPAN
Flender Japan Co., Ltd.
WBG Marive East 21F
Nakasa 2 - 6
Mihama-ku, Chiba-shi
Chiba 261-7121
Phone: +81 (0) 43 - 2 13 39 30
Fax: +81 (0) 43 - 2 13 39 55
E-mail: contact@flender-japan.com

KOREA
Flender Ltd.
7th Fl. Dorim Bldg.
1823 Bangbae-Dong, Seocho-Ku,
Seoul 137-060
Phone: +82 (0) 2 - 34 78 63 37
Fax: +82 (0) 2 - 34 78 63 45
E-mail: flender@unitel.co.kr

KUWAIT
South Gulf Company
Al-Reqai, Plot 1, Block 96
P.O. Box 26229, Safat 13123
Phone: +965 (0) - 4 88 39 15
Fax: +965 (0) - 4 88 39 14
E-mail: adelameen@hotmail.com

LEBANON
Gabriel Acar & Fils s.a.r.l.
Dahr-el-Jamal
Zone Industrielle, Sin-el-Fil
B.P. 80484, Beyrouth
Phone: +961 (0) 1 - 49 82 72
Fax: +961 (0) 1 - 49 49 71
E-mail: gacar@beirut.com

MALAYSIA
Flender Singapore Pte. Ltd.
Representative Office
37 A - 2, Jalan PJU 1/39
Dataran Prima
47301 Petaling Jaya
Selangor Darul Ehsan
Phone: +60 (0) 3 - 78 80 42 63
Fax: +60 (0) 3 - 78 80 42 73
E-mail: flender@tm.net.my

PAKISTAN
Please refer to
A. Friedr. Flender AG
46393 Bocholt
Phone: +49 (0) 28 71 - 92 22 59
Fax: +49 (0) 28 71 - 92 15 16
E-mail: ludger.wittag@flender.com

PHILIPPINES
Flender Singapore Pte. Ltd.
Representative Office
28/F, Unit 2814
The Enterprice Centre
6766 Ayala Avenue corner
Paeso de Roxas, Makati City
Phone: +63 (0) 2 - 8 49 39 93
Fax: +63 (0) 2 - 8 49 39 17
E-mail: roman@flender.com.ph

BAHRAIN / IRAQ / JORDAN / LYBIA
OMAN / QATAR / U.A.E. / YEMEN
Please refer to A. Friedr. Flender AG
Middle East Sales Office
IMES Sanayi Sitesi
E Blok 502, Sokak No. 22
81260 Dudullu - Istanbul
Phone: +90 (0) 2 16 - 4 99 66 23
Fax: +90 (0) 2 16 - 3 64 59 13
E-mail: meso@flendertr.com

SAUDI ARABIA
South Gulf Co.
Al-Khobar, Dahran Str.
Middle East Trade Center
3rd floor, Flat # 23
P.O. Box 20434 31952 Al-Khobar
Phone: +966 (0) 3 - 8 87 53 32
Fax: +966 (0) 3 - 8 87 53 31
E-mail: adelameen@hotmail.com

SINGAPORE
Flender Singapore Pte. Ltd.
13 A, Tech Park Crescent
Singapore 637843
Phone: +65 (0) - 68 97 94 66
Fax: +65 (0) - 68 97 94 11
E-mail: flender@singnet.com.sg
www.flender.com.sg

SYRIA
Misrabi Co & Trading
Mezzeh Autostrade Transportation
Building 4/A, 5th Floor
P.O. Box 12450, Damascus
Phone: +963 (0) 11 - 6 11 67 94
Fax: +963 (0) 11 - 6 11 09 08
E-mail: ismael.misrabi@gmx.net

TAIWAN
A. Friedr. Flender AG
Taiwan Branch Company
1F, No. 5, Lane 240
Nan Yang Street, Hsichih
Taipei Hsien 221
Phone: +886 (0) 2 - 26 93 24 41
Fax: +886 (0) 2 - 26 94 36 11
E-mail: flender_tw@flender.com.tw

THAILAND
Flender Singapore Pte. Ltd.
Representative Office
23/F M Thai Tower, All Seasons Place
87 Wireless Road, Phatumwan
Bangkok 10330
Phone: +66 (0) 2 - 6 27 91 09
Fax: +66 (0) 2 - 6 27 90 01
E-mail: christian.beckers@flender.th.com

VIETNAM
Flender Singapore Pte. Ltd.
Representative Office
Suite 6/6A, 16F Saigon Tower
29 Le Duan Street, District 1
Ho Chi Minh City, Vietnam
Phone: +84 (0) 8 - 8 23 62 97
Fax: +84 (0) 8 - 8 23 62 88
E-mail: flender@hcm.vnn.vn

A U S T R A L I A

Flender (Australia) Pty. Ltd.
9 Nello Place, P.O. Box 6047
Wetherill Park
N.S.W. 2164, Sydney
Phone: +61 (0) 2 - 97 56 23 22
Fax: +61 (0) 2 - 97 56 48 92, 97 56 14 92
E-mail: sales@flender.com.au
www.flender.com.au

SALES OFFICES:
Flender (Australia) Pty. Ltd.
Suite 3, 261 Centre Rd.
Bentleigh, VIC 3204 Melbourne
Phone: +61 (0) 3 - 95 57 08 11
Fax: +61 (0) 3 - 95 57 08 22
E-mail: sales@flender.com.au

Flender (Australia) Pty. Ltd.
Suite 5, 1407 Logan Rd.
Mt. Gravatt
QLD 4122, Brisbane
Phone: +61 (0) 7 - 34 22 23 89
Fax: +61 (0) 7 - 34 22 24 03
E-mail: sales@flender.com.au

Flender (Australia) Pty. Ltd.
Suite 2 403 Great Eastern Highway
W.A. 6104, Redcliffe - Perth
Phone: +61 (0) 8 - 94 77 41 66
Fax: +61 (0) 8 - 94 77 65 11
E-mail: sales@flender.com.au

NEW ZEALAND
Please refer to Flender (Australia) Pty. Ltd.
9 Nello Place, P.O. Box 6047
Wetherill Park
N.S.W. 2164, Sydney
Phone: +61 (0) 2 - 97 56 23 22
Fax: +61 (0) 2 - 97 56 48 92
E-mail: sales@flender.com.au

12. Declaration by the manufacturer

Declaration by the manufacturer

in accordance with EC Engineering Guideline 98/37/EC, Appendix II B

We hereby declare that the

Centrifugal brakes of type **FB**
sizes 180 and 208

described in these Operating Instructions are intended for incorporation in a machine, and that it is prohibited to put them into service before verifying that the machine into which they are incorporated complies with the EC Guidelines (original edition 98/37/EC including any subsequent amendments thereto).

This Manufacturer's Declaration takes into account all the unified standards (inasmuch as they apply to our products) published by the European Commission in the Official Journal of the European Community.

Bocholt, 1997-02-24

Signature (person responible for products)

1	TROMMEL-BREMS / BRAKE DRUM	180	19	7 N 5211295	650598
8	FED-Z / TENSION SPRING	3.6X14.4X8.5	10	9 . 6045506	1259008
16	MUTTER-SKT / HEXAGON NUT	M08X1	9	D 936	340381
8	HEBEL / LEVER	180	7	9 N 5211291	650590
32	NIET-ROHR / TUBULAR RIVET	C 5X15	6	D 7338 MS	351097
4	REIBBELAG / FRICTION LINING	180	5	ITB 2919	650591
1	RING-AUSGL / SPACER	4/4 180	4	7 N 5211568	1226385
8	BLZN-ELASTAL / ELASTAL - BOLT	180 RD 20	2	9 N 5211289	1226327
1	NOCKENTEIL FB 180 / CAM PART	180	1	7 N 5220399	.
Menge No. off	Benennung Description	Kenndaten Data	Teil-Nr. Part No.	Zeichnungs-Nr. Drawing No.	Waren-Nr. Ident No.

Ausgleichbohrung: max.ø4, Radius 80
balance hole: max.ø4, radius 80
EQUILIBRAGE ALESAGE: max.ø4, RAYON 80

Schwingmetallbolzen und Hebel mit Loctite eingesetzt.
Flexible bolt and lever fitted with Loctite
BOULON FLEXIBLE ET LEVIER MONTES AVEC DU LOCTITE.

ⓒ T_A = 30 Nm
Loctite 270

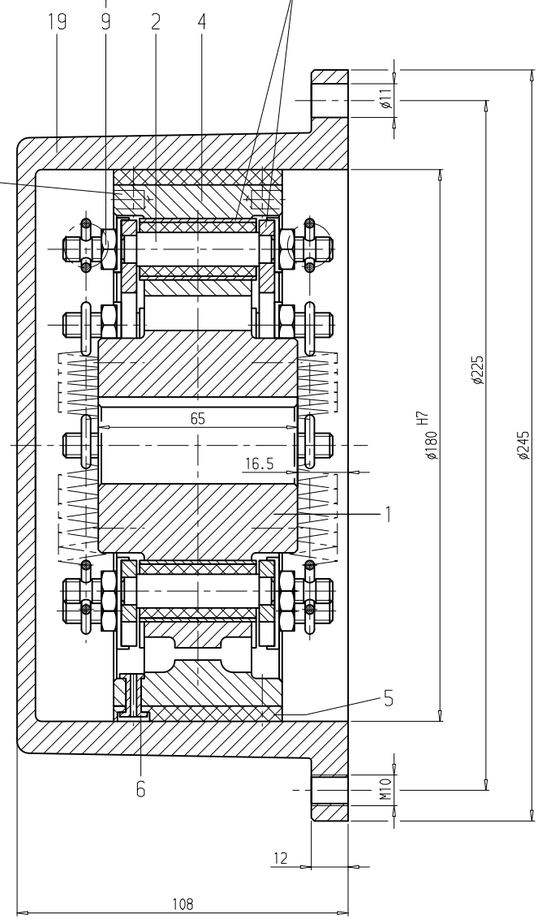

2 Bohrungen ø10 H7 um 180° versetzt zusammen mit Deckel gebohrt und gerieben.
2 Bores ø10 H7 at 180° bored and reamed together with cover.
2 ORIFICES ø10 H7 PERCES CONJOINTEMENT AVEC LE COUVERCLE EN DECALANT DE 180° ET ALESES.

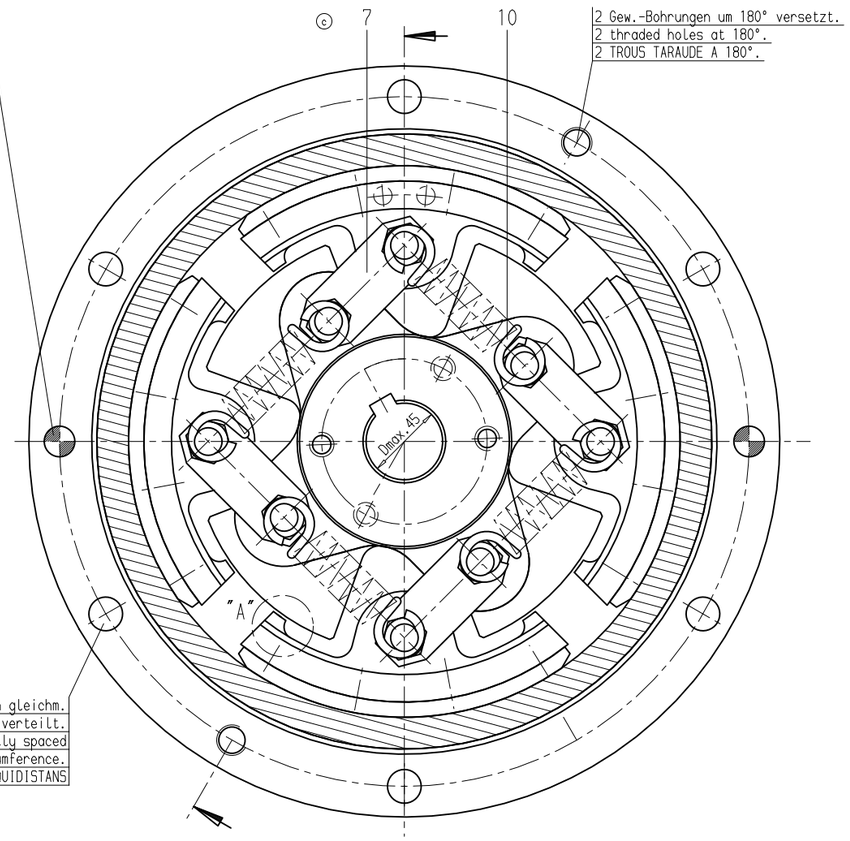

2 Gew.-Bohrungen um 180° versetzt.
2 thraded holes at 180°.
2 TROUS TARAUDE A 180°.

6 Bohrungen gleichm. am Umfang verteilt.
6 holes equally spaced on circumference.
6 ALESAGES EQUIDISTANS

Achtung Montage !!!

Anwärmen der Nockenteile (1) (max.+50°C) erleichtert ggf.das Aufziehen
Bitte beachten Sie die Betriebsanleitung BA 3000 DE

ⓑ

Attention !!!

Warming up the cam parts (1) (max.+50°C) might make the fitting easier.
Please read first the operating instructions BA 3000 EN

Bohrung D nach Auftrag
Diameter D to order
ALESAGE D SELON COMANDE
AGUJERO DE FIJACION SEGUN PEDIDE

Nut nach DIN 6885-1
Chavetero segun DIN 6885-1
Keyway acc. to DIN 6885-1
RAINURE SELON DIN 6885-1

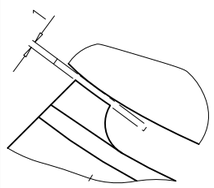

EINZELHEIT "A"
DETAIL

Bei Montage, vor dem Festziehen der Muttern Teil-Nr.9 Zwischen den Auflageflächen der Teile Nr.1 und 4 1 mm dicke Blechstreifen legen und diese nach dem Festziehen wieder entfernen. Federn Teil-Nr.10 beim Einhängen nicht überdehnen.

Place plate strip of 1 mm thickness between the faces of parts 1 and 4 tighten nuts parts 9 and remove plate strips afterwords. Take care not to strech springs part 10 unduly when fitting them.

ATTENTION FONCTIONNEMENT!
PLACER UN MORCEAU DE TOLE DE 1MM D'EPAISSEUR ENTRE LES PORTEES DES PIECES NO. 1 ET NO 4 LORS DU MONTAGE ET AVANT DESSERRER LES ECROUS NO 9 ET LA RETIRER APRES LE SERRAGE. NE PAS EXCESSIVEMENT ALLONGER LES RESSORTS NO 10 LORS DE L'ACCROCHAGE!

Bremsrichtung entgegen der Betriebsrichtung
Direction of braking opposite direction of ratation
LE SENS DE ROTATION AU FREINAGE EST A L'INVERS DU SENS DE ROTATION EN FONCTIONNEMENT

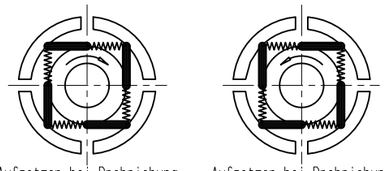

Aufsetzen bei Drehrichung rechts 1)
brake mounting for clock-wise rotation 1)
MONTAGE EN CAS DE SENS DE ROTATION HORAIRE 1)

Aufsetzen bei Drehrichung links 1)
brake mounting for counter clockwiese ratation 1)
MONTAGE EN CAS DE SENS DE ROTATION ANTI-HORAIRE 1)

1) Auf den Wellenspiegel der Welle gesehen auf der die Bremse aufgesetzt wird
1) Viewed in direction of end face of saft on which brake is to be mounted
1) EN VUE SUR LA FACE DE L'ARBRE SUR LEQUEL LE FREIN EST MONTE.

Leerlaufdrehzahl n = 1500 1/min
Idling speed
VITESSE DE ROTATION A VIDE

ⓔ

Die Auswuchtdrehzahl darf 1100 1/min nicht überschreiten. Innenteile (Teile 1-10) zusammengebaut. Auswuchtüte Q6.3 ; zul. Rest-unwucht je Ebene 1.4 g. Vor dem Nuten gewuchtet.	El numero de revoluciones equilibrado, no debe sobrepasar los 1100 1/min. Piezas interiores (1-10) montados. Nivel de la calidad equilibrado Q6.3 ; desequilibrado residual admisible en cada plano 1.4 g. Equilibrado antes de realizar el chavetero.	Balancing speed may not exceed 1100 1/min. Internal parts (part-no. 1-10) balancing after assembly. Balancing quality Q6.3 ; allowable out of balance weight 1.4 g. Keyway is to be cut after balancing.

Äl	Feld	Änderungsbeschreibung	Datum	Name	
f	.	Wuchtstempel korrigiert	2004-06-04	DFJ	. 2004-06-04
e	H4, B12	E-Liste korrigiert, Wuchtstempel geändert	2004-02-12	VIN	VIN 2004-02-12
d	H4	Ersatzteilliste richtiggestellt	2003-01-10	KHM	HEG 2003-01-10
c	3xc	Teil 8 entfernt, Text TA = 30Nm, Loctite 270 und E-Liste hinzu	2001-08-17	KHM	HEG 2001-09-11
b	E3	Stempel hinzu	2001-04-24	TBG	HEG 2001-04-24
a	.	Zeichnung überarbeitet	2001-04-17	TBG	HEG 2001-04-17
					23. 3.93

Zul. Abweichungen für Maße ohne Tol.-Angaben: mittel DIN 7168 | Auftr.-Nr. . | gesichert

FLENDER

Werkstoff /-Nr. .

Nicht gekennzeichnete Oberflächen: .

Rauhwerte Ra in µm

	Abt.	Datum	Name
Gez.	KSA	16.03.93	ROSS
Gepr.	KSA	16.03.93	VOECKING
Norm	KSA	16.03.93	VOECKING

Basis-Nr. | Äl | Ä | Anz. | Teil
Modell-Nr.

Maßstab 1:1
Trägheitsmoment J (kgm²) .
Gewicht (kg) 17

Benennung
BREMS-FLIEHKRAFT
Schl.-Nr.: 0674
FB 180-1 ohne WDR / n = 1500 1/min
Rohteil nach Zeichnung . | sonst nach Zeichnung .

Format Art Zeichnungs-Nr. Äl
6 . 5 273 774 f
Ersatz für . | Aus Zchng. 5 240 171

Allgemeintoleranz ISO 16016 beachten

379428

PLOTT-DATUM: 05-MAY-2006 13:07:27 Fr.Tiebing/PZ6

FLENDER	**Stückliste (SL)** Parts list	**Bauart** **FB** Type **Größe** **180,0** Size **Übersetzung** ratio	**Seite** Page 1/1

Bei Korrespondenz bitte angeben
Please quote in correspondence **SL 4190294-280 DE/EN**

Hierzu gehört Zeichnungs-Nr.
Please refer to DWG No. **5273774**

	Teil-Nr. Part No.	Menge No. off		Benennung Description			Zeichnungs-Nr. Drawings No.	Material-Nr. Ident no.	Gw(kg) Weight
E	0001	1	ST	FB NOCKENTEIL VARI FB CAM PART VARI				000.009.900.192	
E*	0001	1	ST	NOCKENTEIL FB180 UNGEBOHRT CAM PART FB180 UNGEBOHRT EN-JS1030		EN-JS1030	5220399/I	000.001.226.326	2,8
E	0002	8	ST	BLZN-ELASTAL FB180 RD20 ELASTAL-BOLT FB180 RD20 115CrV3		115CrV3	*****	000.001.226.327	0,1
G	0004	1	ST	RING-AUSGL 4/4 FB180 SPACER 4/4 FB180 EN-JL1040		EN-JL1040	5211568/H	000.001.226.385	2,1
E	0005	4	ST	REIBBELAG FB 180 FRICTION LINING FB 180 5022 SH		5022 SH		000.000.650.591	0,0
E	0006	32	ST	NIET-ROHR C 5X15 TUBULAR RIVET C 5X15 D 7338 MS	D 7338	MS		000.000.351.097	0,1
E	0007	8	ST	HEBEL FB 180 LEVER FB 180 S235JRG2C		S235JRG2C	5211291/F	000.000.650.590	0,1
E	0009	16	ST	MUTTER-SKT M08X1 HEXAGON NUT M08X1 D 936 22H	D 936	22H		000.000.340.381	0,1
E	0010	8	ST	FED-Z 3,6X14,4x8,5 TENSION SPRING 3,6X14,4x8,5 1.4310		1.4310	6045506/-	000.001.259.008	37,0

Die mit * gekennzeichneten Teile gehören zu einer Baugruppe (G). Die Baugruppe ist nur komplett auszutauschen.
The parts marked with * belong to a subassembly (G). The subassemblymust be replaced complete.

A. Friedr.Flender AG, D 46393 Bocholt,
Tel.+ 49(0)2871/92-0, Fax+ 49(0)2871/922596, http://www.flender.com

Datum Date	TIEBING, STEFANIE	2691
09.05.2006	Rev.:	

405 520 GB

Lenze

Operating Instructions

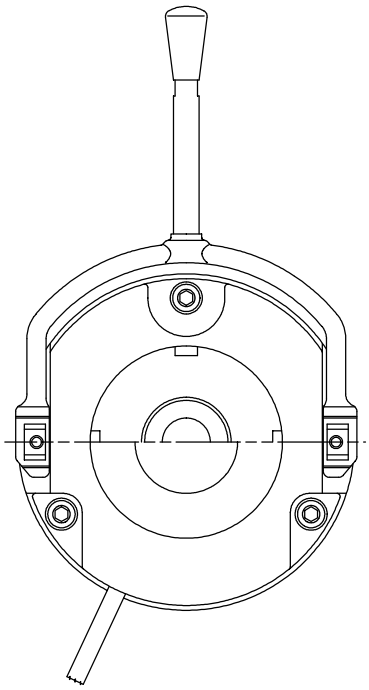

KL458-004-a

Spring-operated brake with electromagnetic release

Type BFK458- □□□

381/428

Product key

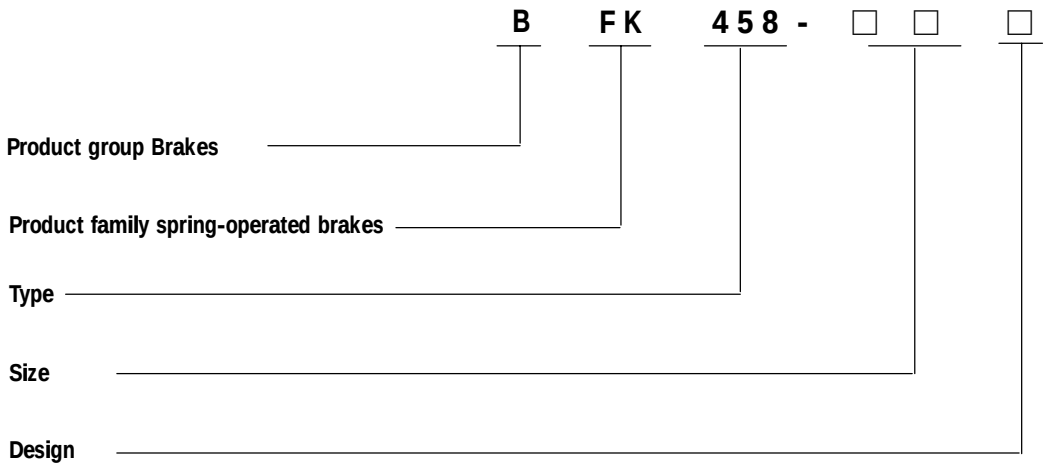

Size
06, 08, 10, 12, 14, 16,
18, 20, 25

Stator design
E - adjustable (brake torque can be reduced via adjuster nut)
N - not adjustable

Uncoded:
Supply voltage, hub bore, options

- The data indicated in the product key and on the nameplate and stickers on the packaging are valid for spring-operated brakes of the series BFK458.

These Operating Instructions are valid for the following spring-operated brakes:

BFK458-06□
BFK458-08□
BFK458-10□
BFK458-12□
BFK458-14□
BFK458-16□
BFK458-18□
BFK458-20□
BFK458-25□

BA 14.0168
Author: Lenze GmbH & Co KG Bremsen
2nd edition: 05/00

Nameplate

Layout

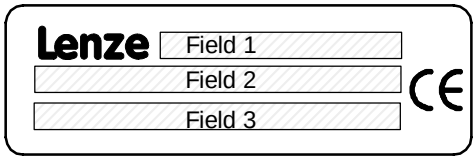

Sizes 06-16 and 18-25

Field	Content			Example: Size 06-16
1	Manufacturer	Brake type	Type no.	Lenze -D BFK458-06E Nr.519508
2	Rated voltage	Rated power	Rated brake torque/CE mark	205V DC 20W 4.0NM CE
3			Date of manufacture	80515
Field	**Content**			**Example: Size 18-25**
1	Manufacturer			Lenze D - AERZEN
2	Brake type			Typ: BFK458-25E
3	Rated voltage	Rated power		205V DC 110W
4	Rated brake torque		Date of manufacture	400NM 80515
5	Type no.		CE mark	Nr. 521388 CE

Packaging sticker

Layout

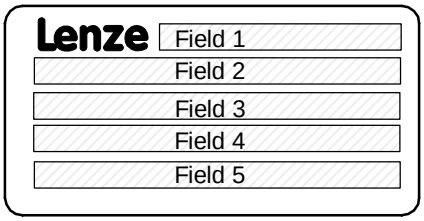

Assembly

Field	Content			Example
1	Manufacturer		Barcode of No.	Lenze D - AERZEN
2	Name		Type no.	MAGNETTEIL KPL. Nr. 519508
3	Type see Product Key	Rated brake torque	No. per box	Typ: BFK458-06E 4,0NM 1 Stück
4	Rated voltage / rated power		Packaging date	205V DC 20W 80515 CE
5	Addition / CE mark			Rostschutzverpackung-Reibflächen fettfrei halten!

Contents

1 Preface and general information 6

1.1 How to use these Operating Instructions 6
1.1.1 Terminology used 6
1.2 Scope of delivery 6
1.3 Lenze drive systems 7
1.3.1 Labelling 7
1.3.2 Application as directed 7
1.3.3 Legal regulations 7

2 Safety information 9

2.1 Persons responsible for the safety 9
2.2 General safety information 10
2.3 Layout of the safety information 11

3 Technical data 12

3.1 Product description 12
3.1.1 General 12
3.1.2 Braking 13
3.1.3 Brake release 13
3.1.4 Decreasing brake torque 13
3.1.5 Manual hand release (optional) 13
3.1.6 Microswitch (optional) 13
3.1.7 Encapsulated design (optional) 13
3.2 Brake torques 14
3.2.1 Basic module E, brake torque reduction 14
3.2.2 Brake torques depending on the speed and permissible limit speeds 15
3.3 Rated data 16
3.3.1 Coil voltage / Coil resistance 17
3.4 Switching times 19
3.5 Operating frequency / friction work 20
3.6 Emission 21

4 Installation 22

4.1 Required tools 22
4.2 Assembly 23
4.2.1 Preparation 23
4.3 Installation 23
4.3.1 Installation of the hub onto the shaft 23
4.3.2 Installation of the brake 24
4.3.3 Assembly of the friction plate sizes 06 to 16 26
4.3.4 Assembly of the flange 26
4.3.5 Assembly of the cover seal 27
4.3.6 Assembly of the manual release sizes 06 to 14 28
4.3.7 Assembly of the manual release sizes 16 to 25 28
4.4 Electrical connection 29

5 Commissioning and operation 33
5.1 Operational test 33
5.1.1 Release / voltage check 33
5.1.2 Microswitch - release check 34
5.1.3 Microswitch - wear check 34
5.1.4 Manual release 35
5.2 Decreasing brake torque (only for stators type E) 36
5.3 During operation 36
6 Maintenance / repair 37
6.1 Inspection intervals 37
6.2 Inspections 37
6.2.1 Rotor thickness 37
6.2.2 Air gap 37
6.2.3 Releasing / voltage 38
6.3 Maintenance 38
6.3.1 Readjustment of air gap 38
6.3.2 Exchange rotor 39
6.4 Spare-parts list 39
6.4.1 Spare parts list for sizes 06 to 16 40
6.4.2 Spare parts list for sizes 18 to 25 41
6.4 Order of spare parts 43
7 Troubleshooting and fault elimination 45
Declaration of Conformity / Manufacturer's Certification
Service addresses

1 Preface and general information

1.1 How to use these Operating Instructions

- These Operating Instructions are intended for safety-relevant operations on and with the spring-operated brake with electromagnetic release. They contain safety instructions, which must be observed.
- All personnel working on and with the spring-operated brake with electromagnetic release must have the Operating Instructions available and observe the information and notes relevant for them.
- The Operating Instructions must always be in a complete and perfectly readable state.

1.1.1 Terminology used

Brake

In the following text, the term ”spring-operated brake” is used for ”spring-operated brake with electromagnetic release”.

Drive system

For drive systems with spring-operated brake with electromagnetic release and other Lenze drive components the term ”drive system” will be used in the following text.

1.2 Scope of delivery

- The drive systems are combined individually according to a modular design. The scope of delivery is indicated in the accompanying papers.
- After receipt of the delivery, check immediately whether it corresponds to the accompanying papers. Lenze does not grant any warranty for deficiencies claimed subsequently. Claim
  - visible transport damage immediately to the forwarder.
  - visible deficiencies / incompleteness immediately to the responsible Lenze subsidiary / agency.

1.3 Lenze drive systems

1.3.1 Labelling

- Lenze drive systems and components are uniquely designated by the content of their nameplates.
- Manufacturer:
  Lenze GmbH & Co KG Bremsen
  Postfach 10 13 52
  D-31763 Hameln

  Site:
  Wülmser Weg 5
  D-31855 Aerzen
- The spring-operated brake BFK458-□□□ is also available as individual components. The user can build up the system as required. The following indications: packaging sticker, nameplate, and type code are valid for the spring-operated brake.
- When delivering single components, the labelling is missing!

1.3.2 Application as directed

- Lenze drive systems
  - are intended for use in machinery and systems.
  - must only be used for the purposes ordered and confirmed.
  - must only be operated under the ambient conditions prescribed in these Operating Instructions.
  - must not be operated beyond their corresponding power limits.

Any other use shall be deemed inappropriate!

1.3.3 Legal regulations

Liability

- The information, data, and notes in these Operating Instructions met the state of the art at the time of printing. Claims referring to drive systems which have already been supplied cannot be derived from the information, illustrations, and descriptions.
- We do not accept any liability for damage or operating interference caused by:
  - inappropriate use
  - unauthorized modifications to the drive system
  - improper working on and with the drive system
  - operating faults
  - disregarding these Operating Instructions

Warranty

- Conditions of warranty: see terms of sale and delivery of Lenze GmbH & Co KG.
- Warranty claims must be made immediately after detecting defects or faults.
- The warranty is void where liability claims cannot also be made.

2 Safety information

2.1 Persons responsible for the safety

Operator

- An operator is any natural or legal person who uses the drive system or on behalf of whom the spring-operated brake is used.
- The operator or his safety officer are obliged
  - to check whether all relevant regulations, notes, and laws are observed,
  - that only qualified personnel work on and with the drive system,
  - to ensure that the personnel have the Operating Instructions available for all corresponding operations and
  - to prohibit non-qualified personnel from working with and on the spring-operated brake.

Qualified personnel

Qualified personnel are persons who - because of their education, experience, instructions, and knowledge about the corresponding standards and regulations, rules for the prevention of accidents, and operating conditions - are authorized by the persons responsible for the safety of the plant to perform the required actions and who are able to recognize the potential hazards.
(see IEC 364, definition for qualified personnel)

2.2 General safety information

- These safety notes do not claim to be complete. In case of questions and problems please contact your Lenze representative.
- At the time of supply the spring-operated brake is state-of-the-art and ensures basically safe operation.
- The spring-operated brake is hazardous to persons, the spring-operated brake itself and other properties of the operator, if
  - non-qualified personnel work on and with the spring-operated brake.
  - the spring-operated brake is used improperly.
- The spring-operated brakes must be designed such that they perform their functions after proper installation and with application as directed in fault-free operation and that they do not cause hazards for persons. This also applies to the interaction with the whole system.
- The spring-operated brake must only be operated in a perfect state.
- Retrofittings or changes of the spring-operated brake are generally prohibited. In any case, Lenze must be contacted.
- The friction linings must be carefully protected from grease or oil since even small amounts of lubricants reduce the brake torque considerably.
- With application conditions according to enclosure IP54, the brake torque will usually not be reduced. Because of the multitude of possible applications, proper function of the mechanical components must be tested under the specific application conditions.

Possible applications of the spring-operated brake BFK458-□□□:

- No explosive or aggressive atmosphere.
- Humidity, no restriction.
- Ambient temperature -20°C to +40 °C.
- With high humidity and low temperatures
  - Take measures to protect armature plate and rotor from freezing.
- Electrical connections must be protected against contact.
- Cooling-air flow must not be impeded.
- In reverse operation it is recommended to additionally glue the hub to the shaft.

2.3 Layout of the safety information

- All safety information given in these Operating Instructions has the same layout:

Signal word
Note

- The icon characterizes the type of danger.
- The signal word characterizes the severity of danger.
- The note text describes the danger and gives information how to prevent dangerous situations.

Warning of damage to persons

Icons used		Signal words	
	Warning of hazardous electrical voltage	**Danger!**	Warns of **impending danger** . Consequences if disregarded: Death or severe injuries.
		Warning!	Warns of **potential, very hazardous situations**. Possible consequences if disregarded: Death or severe injuries.
	Warning of a general danger	**Caution!**	Warns of **potential, hazardous situations**. Possible consequences if disregarded: Light or minor injuries.

Warning of material damage

Icons used	Signal words	
STOP	**Stop!**	Warns of **potential damage to material**. Possible consequences if disregarded: Damage of the controller/drive system or its environment .

Other notes

Icons used	Signal words	
	Note!	Designates a general, useful note. If you observe it, handling of the drive system/device is made easier.

3 Technical data

3.1 Product description

1	Armature plate
2	Compression springs
3	Rotor
4	Hub
5	Shaft
6	Flange
7	Stator
8	Adjuster nut
9	Threaded sleeves
	$s_{Lü}$ = Air gap

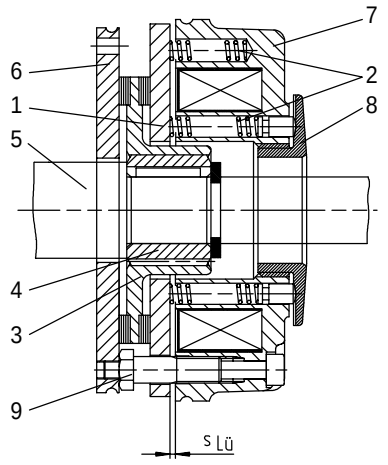

FIG 1 Design of the spring-operated brake BFK458: basic module E (complete stator) + rotor + hub + flange

1	Armature plate
2	Compression springs
3	Rotor
4	Hub
7	Stator
9	Threaded sleeves
	$s_{Lü}$ = Air gap

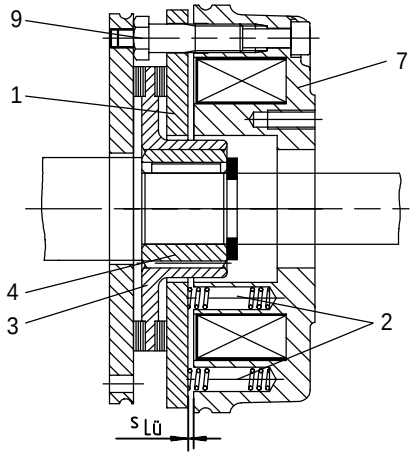

FIG 2 Design of the spring-operated brake BFK458: basic module N (complete stator) + rotor + hub + flange

3.1.1 General

The spring-operated brake type BFK458-□□□ is a single disc brake with two friction surfaces. The brake torque is generated by several compression springs (2) by friction. The brake is released electromagnetically.

The spring-operated brake type BFK458-□□□ is designed for the conversion of mechanical work and kinetic energy into heat. For operating speed see chapter 3.3 Rated data. Due to the static brake torque, the brake can hold loads without speed difference. Emergency braking is possible at high speed, see chapter 3.3 Rated data. The more friction work, the higher the wear.

3.1.2 Braking

During braking, the rotor (4), which is axially movable on the hub (3), is pressed against the friction surface - via the armature plate (1) - by means of inner and outer springs (2). The asbestos-free friction linings ensure a high brake torque with low wear. The brake torque is transmitted between hub (4) and rotor (3) via the splines.

3.1.3 Brake release

In braked state, there is an air gap $s_{Lü}$ between stator (7) and armature plate (1). To release the brake, the stator coil (7) is excited with the DC voltage provided. The magnetic force generated attracts the armature plate (1) towards the stator (7) against the spring force. The rotor (3) is then released and can rotate freely.

3.1.4 Decreasing brake torque

For basic module E (adjustable) the spring force and thus the brake torque can be reduced by unscrewing the adjuster nut (8) (see chapter 5.2).

3.1.5 Manual hand release (optional)

The manual hand release is optionally available for short-term releases when no voltage is applied. The manual hand release can be retrofitted.

3.1.6 Microswitch (optional)

The manufacturer offers the microswitch for air-gap or wear monitoring. The user must provide the corresponding electrical connection (see chapter 4.4).

When air-gap monitoring, the motor does not start before the brake has been released. With this set-up, all possible faults are monitored. For example, in the event of defective rectifiers, interrupted connection cables, defective coils, or excessive air gaps the motor will not start.

When checking the wear, no current will be applied to the brake and the motor if the air gap is too large.

3.1.7 Encapsulated design (optional)

This design not only avoids the penetration of spray water and dust but also the spreading of abrasion particles outside the brake. This is achieved by:

- a cover seal over the armature plate and rotor,
- a cover in the adjuster nut,
- a shaft seal in the adjuster nut for continuous shafts (option).

3.2 Brake torques

Size	06	08	10	12	14	16	18	20	25
Rated torques [Nm], referring to the relative speed Δn = 100 min^{-1}	2 N/E	3.5 N/E	7 N/E	14 N/E	25 N/E	35 N/E	65 N/E	80 E	175 N/E
	2.5 N/E	4 E	9 N/E	18 N/E	35 N	45 N/E	80 N/E	115 N/E	220 N
	3 N/E	5 N/E	11 N/E	23 N/E	40 N/E	55 N/E	100 N/E	145 N/E	265 N/E
	3.5 N/E	6 N/E	14 N/E	27 N/E	45 N/E	60 N/E	115 N/E	170 N/E	300 N/E
	---	7 N/E	---	---	55 N/E	70 N/E	130 N/E	200 N/E	350 N/E
	---	---	---	---	---	---	---	230 N/E	---
	4 N/E	8 N/E	16 N/E	32 N/E	60 N/E	80 N/E	150 N/E	260 N/E	400 N/E
	4.5 N/E	9 N/E	18 N/E	36 N/E	65 N/E	90 N/E	165 N/E	290 N/E	445 N/E
	5 E	10 E	20 E	40 E	75 N/E	100 N/E	185 N/E	315 N/E	490 N/E
	5.5 E	11 E	23 N/E	46 N/E	80 N/E	105 N/E	200 N/E	345 N/E	530 E
	6 N/E	12 N/E	---	---	95 N/E	125 N/E	235 N/E	400 N/E	600 E

TAB 1 N.....Brake torque for module N (without adjuster nut)
E.....Brake torque for module E (with adjuster nut)

Holding brake with emergency stop operation ($s_{Lümax}$ ca. 1.5 x $s_{Lürated}$)

Operating brake ($s_{Lümax}$ ca. 2.5 x $s_{Lürated}$)

Standard brake torque

3.2.1 Basic module E, brake torque reduction

For basic module E the brake torque can be reduced by means of the adjuster nut in the stator. The adjuster nut may only be screwed out up to the maximum projection $h_{1max.}$ (see chapter 3.3).

Size	06	08	10	12	14	16	18	20	25
Torque reduction per detent position [Nm]	0.2	0.35	0.8	1.3	1.7	1.6	3.6	5.6	6.2

TAB 2

Stop!
Take into consideration that engagement times and disengagement times change depending on the brake torque.

3.2.2 Brake torques depending on the speed and permissible limit speeds

Type	Brake torque rated value at Δn = 100 min^{-1} [%]	Brake torque at Δn_0 [min^{-1}] [%]			max. speed Δn_{0max} [min^{-1}]
		1500	3000	max. horizontal	
BFK458-06	100	87	80	65	12400
BFK458-08		85	78	66	10100
BFK458-10		83	76		8300
BFK458-12		81	74		6700
BFK458-14		80	73	67	6000
BFK458-16		79	72	66	5300
BFK458-18		77	70		4400
BFK458-20		75	68		3700
BFK458-25		73			3000

TAB 3

3.3 Rated data

Type	$s_{Lürated}$ + 0.1mm - 0.05mm [mm]	$s_{Lü}$ max. operating brake [mm]	$s_{Lü}$ max. holding brake [mm]	max. adjust-ment, admis-sible wear [mm]	Rotor thick-ness [mm] min. 1)	Rotor thick-ness [mm] max.	Excess of the adjuster nut h_{1max} (see fig. 18 page 36) [mm]	Pitch circle 4 [mm]	Pitch circle Thread	Screws for flange in-stallation DIN 6912 2)	Minimum depth of the clearing holes (installation flange) [mm]	Tightening torque Screws [Nm]	Tightening torque Lever com-plete [Nm]	Weight of stator complete [kg]
BFK458-06	0.2	0.5	0.3	1.5	4.5	6.0	4.5	72	3 x M4	3 x M4	0.5	2.8	2.8	0.75
BFK458-08					5.5	7.0		90	3 x M5	3 x M5	1	5.5		1.2
BFK458-10					7.5	9.0	7.5	112	3 x M6	3 x M6	2	9.5	4.8	2.1
BFK458-12	0.3	0.75	0.45	2.0	8.0	10.0	9.5	132	3 x M6	3 x M6	3			3.5
BFK458-14				2.5	7.5		11	145	3 x M8	3 x M8	1.5	23	12	5.2
BFK458-16				3.5	8.0	11.5	10	170	3 x M8	3 x M8	0.5			7.9
BFK458-18	0.4	1.0	0.6	3.0	10.0	13.0	15	196	6 x M8	4 x M8 3)	0.8		23	12.0
BFK458-20				4.0	12.0	16.0	17	230	6 x M10	4 x M10 3)	2.1	46		19.3
BFK458-25	0.5	1.25	0.75	4.5	15.5	20.0	19.5	278	6 x M10	6 x M10	5		40	29.1

1) The friction lining is designed such that the brake can be adjusted at least 5 times.

2) The screw length depends on the material and the thickness of the customer's mounting place.

3) The thread in the threading surface is offset by 30° in reference to the center axle of the manual release lever.

3.3.1 Coil voltage / Coil resistance

Type	Electrical Power P_{20} [W] 1)	Voltage U [V]	Coil resistance $R_{20} \pm 8\%$ [Ω]
BFK458-06	20	24	20
		96	460.8
		103	530.5
		170	1445
		180	1620
		190	1805
		205	2101
BFK458-08	25	24	23
		96	368
		103	424.4
		170	1156
		180	1296
		190	1444
		205	1681
BFK458-10	30	24	19.2
	31	96	297.3
	32	103	331.5
	30	170	963.3
	32	180	1013
	30	190	1203
	33	205	1273
BFK458-12	40	24	14.4
		96	230.4
		103	265.2
		170	722.5
		180	810
		190	902.5
		205	1051
BFK458-14	50	24	11.5
		96	184.3
	53	103	200.2
	50	170	578
	53	180	611.3
	50	190	722
	53	205	792.9

1) Coil power at 20°C

Type	Electrical Power P_{20} [W] 1)	Voltage U [V]	Coil resistance $R_{20} \pm 8\%$ [Ω]
BFK458-16	55	24	10.5
		96	167.6
	56	103	189.5
	55	170	525.5
		180	589.1
	60	190	601.7
	56	205	750.5
BFK458-18	85	24	6.8
		96	108.4
		103	124.8
		170	340
		180	387.2
		190	424.7
		205	494.4
BFK458-20	100	24	5.76
		96	92.2
		103	106.1
		170	289
		180	324
	110	190	328.2
	100	205	420.3
BFK458-25	110	24	5.24
		96	83.8
		103	96.5
		170	262.7
		180	294.6
		190	328.2
		205	382.1

1) Coil power at 20 °C

3.4 Switching times

t_1	Engagement time
t_2	Disenganement time (up to M = 0.1 M_r)
t_{11}	Reaction delay during engagement
t_{12}	Torque rise time of the brake torque

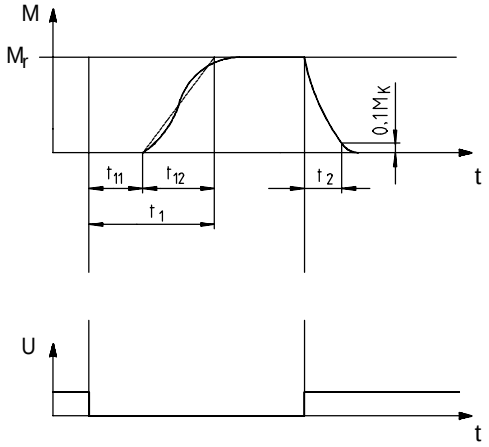

FIG 3 Switching times

Type	Brake torque rated value at Δn = 100 min^{-1} M_r 1)	Maximum permissible friction work per operation only Q_E	Transition operating frequency $s_{hü}$	Operating time [ms] for $s_{Lürated}$			
				Engaging DC-switching			Disengaging
	[Nm]	[J]	[h^{-1}]	t_{11}	t_{12}	t_1	t_2
BFK458-06	4	3000	79	15	13	28	45
BFK458-08	8	7500	50	15	16	31	57
BFK458-10	16	12000	40	28	19	47	76
BFK458-12	32	24000	30	28	25	53	115
BFK458-14	60	30000	28	17	25	42	210
BFK458-16	80	36000	27	27	30	57	220
BFK458-18	150	60000	20	33	45	78	270
BFK458-20	260	80000	19	65	100	165	340
BFK458-25	400	120000	15	110	120	230	390

TAB 4 1) Minimum brake torque when all components are run in.

The transitions from the state without brake torque to the steady brake torque is not without delay. The engagement times are valid for switching on the DC side with an induction voltage of approx. 5 to 10 times nominal voltage. The chart shows the delay during engagement t_{11}, the rise time of the brake torque t_{12} and the engagement time $t_1 = t_{11} + t_{12}$, as well as the disengagement time t_2.

Disengagement time:

The disengagement time is not influenced by DC or AC switching operations. It can only be shortened by special equipment for fast-response excitation or overexcitation.

Engagement time

With switching on the AC side, the engagement times are prolonged extremely. The change is approx. by the factor 6-10, for connection see FIG 13.

The most simple connection of rectifier and brake directly in parallel to the motor winding additionally prolongs the engagement time because the motor, which is already switched off but still running continues to excite the brake (for connection see FIG 12).

Spark suppressors for the rated voltages, which are to connected in parallel to the contact are available for engagement on the DC side. If this is not admissible for safety reasons, e. g. with hoists and lifts, the spark suppressor can also be connected in parallel to the brake coil (for connection see FIG 14).

A reduction of the brake torque via the adjuster nut prolongs the engagement time and reduces the disengagement time. If the prolongation is too long, an anti-magnetic plate - to be assembled between stator and armature plate - is available. The plate reduces the engagement time and prolongs the disengagement time.

3.5 Operating frequency / friction work

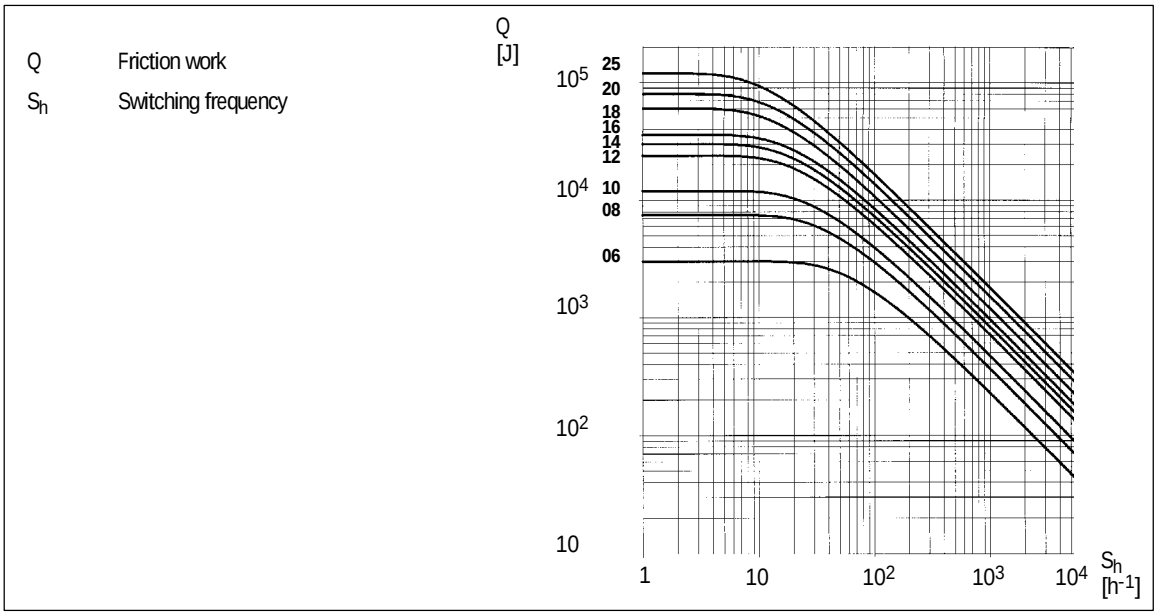

FIG 4 Friction work as function of the operating frequency, (sizes 06-25)

$$S_{hzul} = \frac{-S_{hü}}{\ln\left(1-\frac{Q}{Q_E}\right)} \qquad Q_{zul} = Q_E\left(1 - e^{\frac{-S_{hü}}{S_h}}\right)$$

The permissible operating frequency S_{hperm} depends on the friction work Q (see FIG 4). An operating frequency of S_h results in the permissible friction work Q.

With high speed and friction work, the wear increases strongly, because very high temperatures occur at the friction faces for a short time.

3.6 Emission

Electromagnetic compatibility

Under normal switching conditions with an unfiltered DC voltage via a bridge circuit the spring-operated brake type BFK458-□□□ complies with the EMC standard EN50081 part 1.

Please note, that the entire circuit only complies with the EMC Directive, if it is configured according to one of the following possibilities:

Circuit:		With a rectifier that: complies with standard	With a rectifier that: does not comply with standard	Spark suppressor in parallel to AC voltage	Mains filters
DC switching	< = 5 Switching operations / minute	●			
			●	●	
	> 5 Switching operations / minute	●			●
			●		●
AC switching	< = 5 Switching operations / minute	●			
			●	●	
	> 5 Switching operations / minute	●			
			●	●	

Spark suppressors according to coil voltage on request.

Heat

Since the brake converts kinetic energy as well as mechanical and electrical energy into heat, the surface temperature varies considerably, depending on the operating conditions and the possible heat dissipation. Under unfavorable conditions, the surface temperature can reach 130 °C.

Noises

The switching noises during engagement and disengagement depend on the air gap $s_{Lü}$ and the brake size.

Depending on the natural oscillation after installation, operating conditions and state of the friction faces, the brake may squeak during braking.

Others

The abrasion of the friction parts produces dust.

With large loads, the friction face heats up so strongly, that odors may occur.

4 Installation

Warnung!
Toothed hub or screws must not be lubricated with grease or oil.

4.1 Required tools

Type	Torque wrench [Nm]	Insertion for hexagon socket screws Wrench size [mm] *	Wrench Wrench size [mm] Cap screws	Wrench Wrench size [mm] Manual release Nuts / bolts	Wrench Wrench size [mm] Manual release 2kt lever	Hook wrench DIN1810 Design A for Diameter [mm]	Box spanner for flange installation, outside Wrench size [mm]
BFK458-06	1 to 12	3x1/4" square	8	7 / 5.5	7	45 - 55	7x1/4" square
BFK458-08		4x1/4" square	9	10 / 7		52 - 55	8x1/4" square
BFK458-10		5x1/4" square	12			68 - 75	10x1/4" square
BFK458-12						80 - 90	
BFK458-14	20 to 100	6x1/2" square	15	12 / 8	9		13x1/2" square
BFK458-16						95 - 100	
BFK458-18				- / 10	10	110 - 115	
BFK458-20		8x1/2" square	17		12	135 - 145	17x1/2" square
BFK458-25					14	155 - 165	

* for flange mounting insertion with journal guide

Feeler gauge	Caliper gauge	Multimeter

4.2 Assembly

4.2.1 Preparation

1. Unpack spring-operated brake.
2. Check for completeness
3. Check nameplate data, especially rated voltage.

4.3 Installation

- When you have ordered a version with manual release, friction plate, or flange, attach these units first.

4.3.1 Installation of the hub onto the shaft

4	Hub
4.1	Circlip
15	Endshield

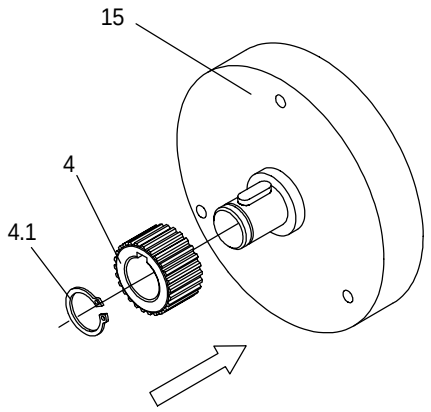

FIG 5 Installation of the hub onto the shaft

1. Press hub (4) onto the shaft.
2. Secure hub against axial displacement, e.g. using a circlip (4.1).

Stop!
In reverse operation it is recommended to additionally glue the hub to the shaft.

4.3.2 Installation of the brake

Stop!

- When dimensioning the thread depth in the endshield you must consider the permissible wear (see chapter 3.3).
- Check the condition of the endshield (15). It must be free of oil and grease.

3	Rotor
4	Hub
15	Endshield

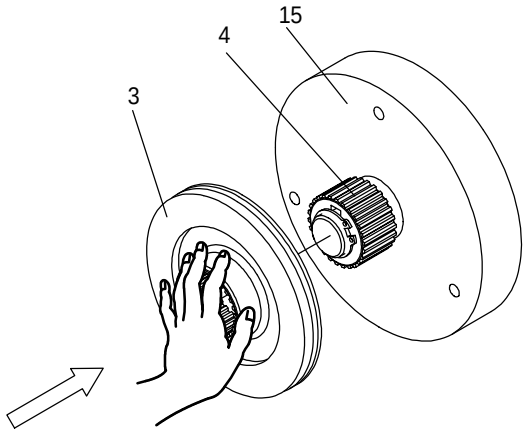

FIG 6 Assembly of the brake

1. Push the rotor (3) onto the hub (4) and check whether it can be moved by hand (FIG 6).

Stop!
Please note the following in the adjuster nut for versions with shaft seal:

2. Lightly lubricate the lip of the shaft seal with grease.
3. When assembling the stator push the shaft seal carefully over the shaft.

- The shaft should be located concentrically to the shaft seal.

7	Stator complete
10	Allen screw
11	Clip
15	Endshield

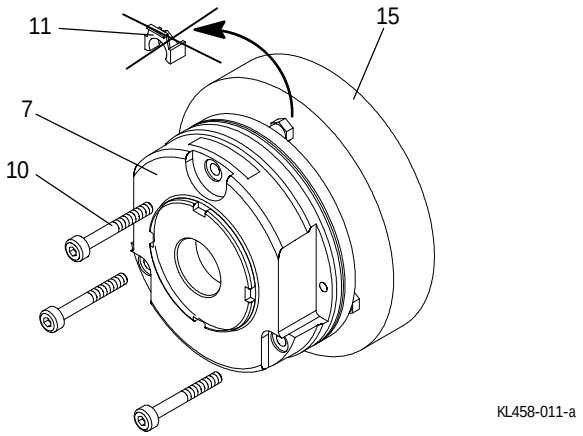

FIG 7

4. Screw the complete stator (7) onto the endshield (15) using the screws (10) (FIG 7).
5. Remove the clips (11) (throw away; FIG 7).

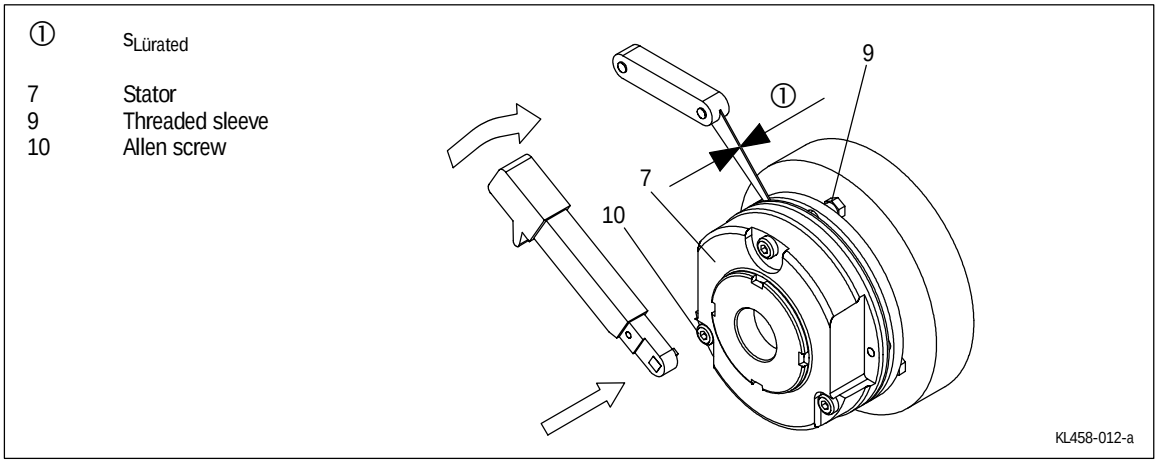

FIG 8

6. Tighten the screws (10) evenly (for torques see rated data table chapter 3.3 and FIG 8).
7. Check the air gap $s_{Lürated}$ near the bolts (10) by means of the thickness gauge ($s_{Lürated}$ see rated data table chapter 3.3 and FIG 8).

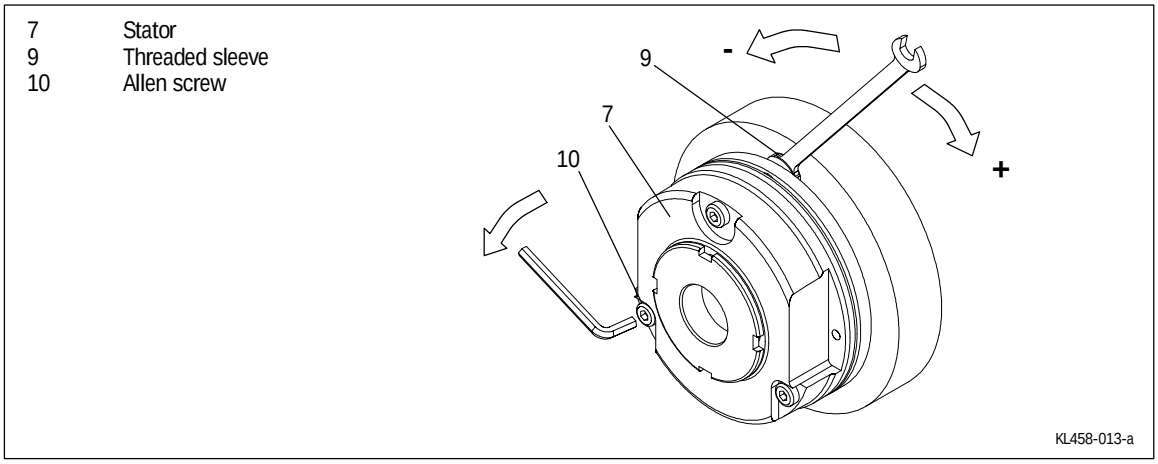

FIG 9

- If the air gap is too large, readjust $s_{Lürated}$ as follows:

8. Unbolt screws (10).
9. Slightly turn threaded sleeve (9) using a spanner.
   - If the air gap is too large, screw them into the stator (7).
   - If the air gap it too small, screw them out of the stator (7)
   - $^1/_6$ turn changes the width of the air gap by approx. 0.15 mm.
10. Tighten the screws (10) (for torques see chapter 3.3).
11. Check air gap again and if necessary, repeat the adjustment.

4.3.3 Assembly of the friction plate sizes 06 to 16

12	Friction plate
15	Endshield

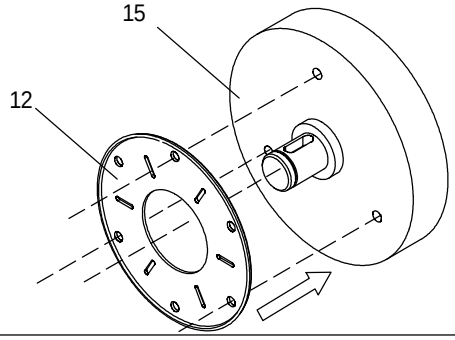

FIG 10 Assembly of friction plate

1. Hold the friction plate (12) against the endshield.
2. Check the pitch circle and the threads of the fastening bore holes.

The lip edge must lie a way from the mounting surface.

4.3.4 Assembly of the flange

- The flange (6) can be screwed onto the endshield (15) with the outer pitch circle (for screw dimensions see chapter 3.3).

Flange assembly with additional screws

Stop!

- Behind the thread holes for the screws in the flange there must be clearing holes in the endshield. (see chapter 3.3). Without clearing holes the minimum rotor thickness cannot be used. Under no circumstances may the screws be pressed against the endshield.
- For sizes 18 and 20 the threads at the fastening surface are shifted by 30° with respect to the center axis of the manual release lever.

6	Flange
10.1	Set of fastening screws
15	Endshield

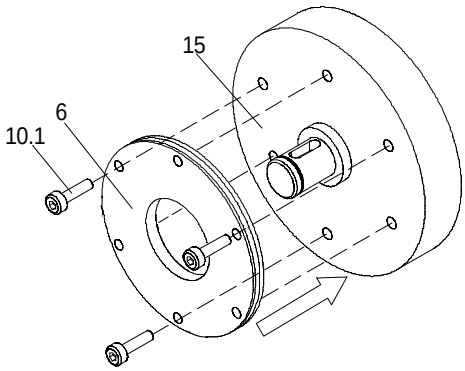

FIG 11 Assembly of the flange

1. Hold the flange (6) to the endshield (15) and check the pitch circle and the threads of the fastening bore holes.
2. Screw the flange (6) onto the endshield (15) using the screws (10).
3. Tighten the screw evenly (for torques see chapter 3.3).
4. Check the height of the screw heads. On the outer pitch circle the screw head must not be higher than the minimum rotor thickness. We recommend to use screws according to DIN6912 (for dimensions see chapter 3.3).

Flange assembly without additional screws
(not possible with sizes 18 and 20)

Stop!
When dimensioning the thread depth in the endshield you must consider the permissible wear (see chapter 3.3).

1. Hold the flange (6) to the endshield (15) and check the pitch circle and the threads of the fastening bore holes.
2. Assemble the brake with the corresponding screw set (see chapter 4.3.2).

4.3.5 Assembly of the cover seal

1	Armature plate
7	Stator
10	Socket head screw
12	Friction plate
13	Cover seal
15	Endshield

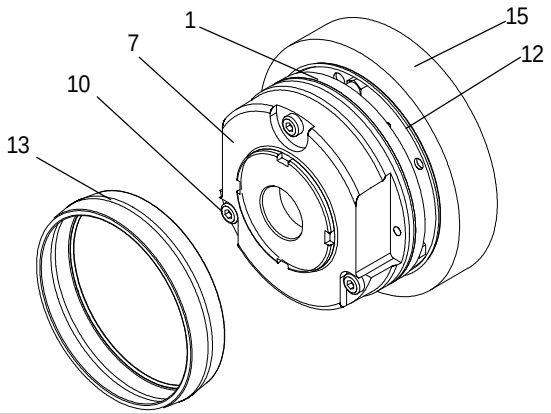

1	Armature plate
6	Flange
7	Stator
10	Socket head screw
12	Friction plate
13	Cover seal
15	Endshield

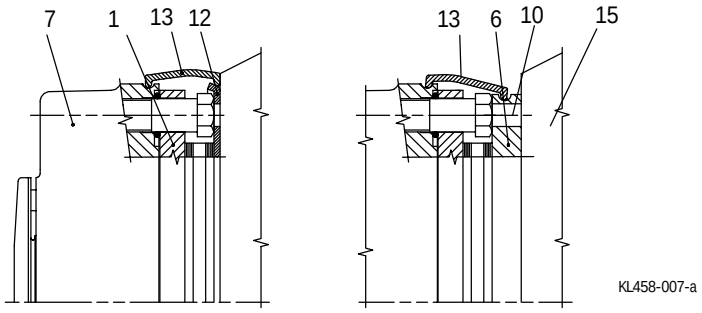

1. Pull the cable through the seal (13).
2. Push the seal (13) over the stator (7).
3. Press the lips of the cover seal (13) into the groove of stator (7) and flange (6).

4.3.6 Assembly of the manual release sizes 06 to 14

3	Rotor
4	Hub
7	Stator
14.1	Manual-release
14.2	Spring
14.3	Washer
14.4	Hexagon screw

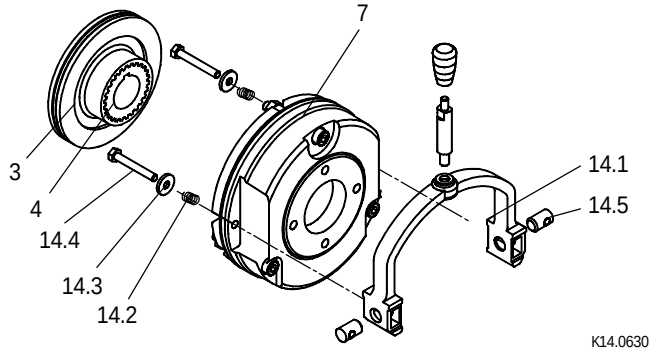

4.3.7 Assembly of the manual release sizes 16 to 25

3	Rotor
4	Hub
7	Stator
14.1	Manual-release
14.2	Spring
14.3	Washer
14.4	Hexagon screw

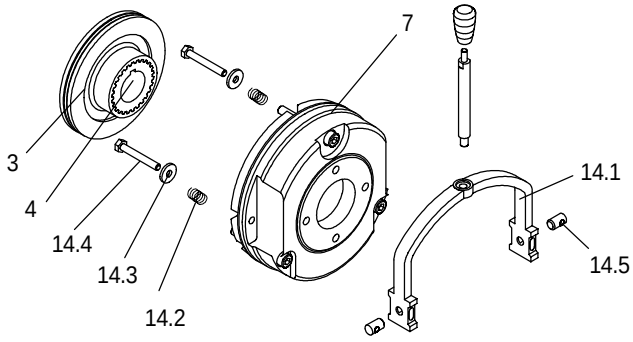

1. Insert the compression springs (14.2) into the bore holes of the armature plate.
2. Push the bolts (14.4) through the washers (14.3).
3. Push the screws and washers (14.4 and 14.3) through the compression springs (14.2), armature plate (1) and stator (7).
4. Locate the trunnions (14.5) in the shackle (14.1).
5. Screw the hexagon screws (14.4) into the trunnions (14.5) in the shackle (14.1).
6. Tighten hexagon screws (14.4) until armature plate (1) moves towards stator (7).
7. Remove and discard chips.

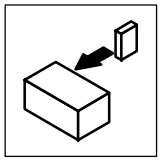

8. Adjust the gap between the armature plate (1) and the stator (7) using the hexagon screws (14.4) to achieve dimension S + $S_{Lü}$ (for values see TAB 5).
9. Assemble brake as per chapter 4.3.2.
10. Check and re-adjust (if necessary) gaps S and $S_{Lü}$ with hexagon screws (14.4). For values see TAB 5.
11. After assembly of the protection cover (if fitted) screw the lever and knob into the shackle (14.1) and tighten to specified torque (see chapter 3.3).

	Size	$s_{Lü}$ (mm)	$s^{+0.1}$ (mm)	s + $s_{Lü}$ (mm)
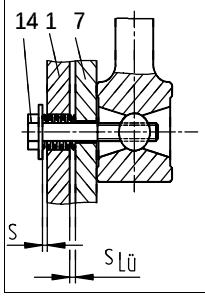	06	0.2	1	1.2
	08			
	10			
	12	0.3	1.5	1.8
	14			
	16			
	18	0.4	2	2.4
	20			
	25	0.5	2.5	3

TAB 5 Adjustment setting for manual release

Values S and $S_{Lü}$ only apply to the brake in the assembled state with the coil deenergized.

Stop!
Dimension “s” must be observed! Check air gap “$s_{Lü}$”.

4.4 Electrical connection

Warning!
The brake must only be electrically connected when no voltage is applied.

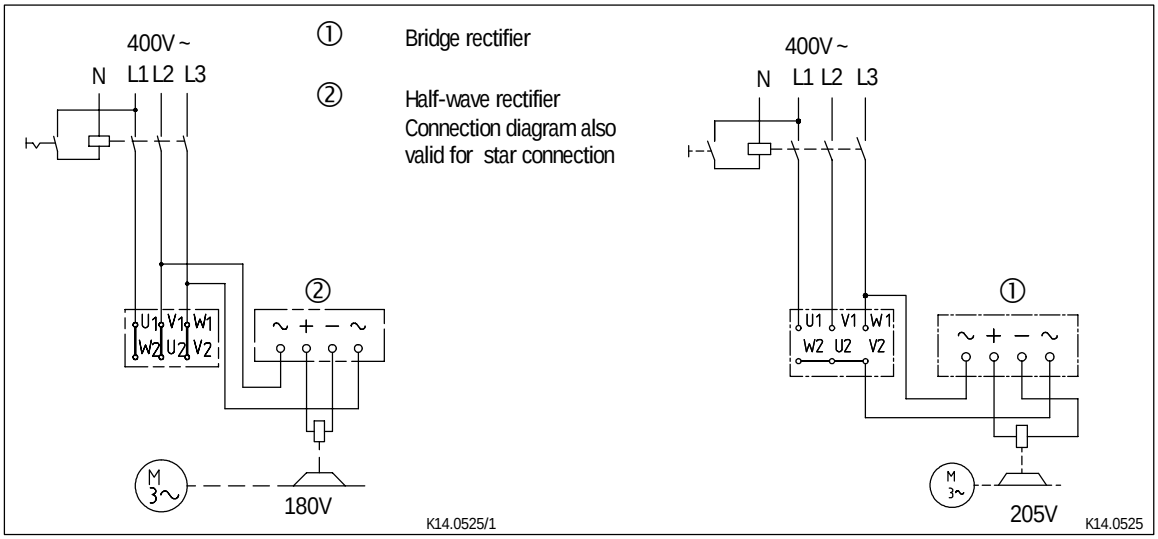

FIG 12 Switching in parallel to motor, extremely delayed engagement

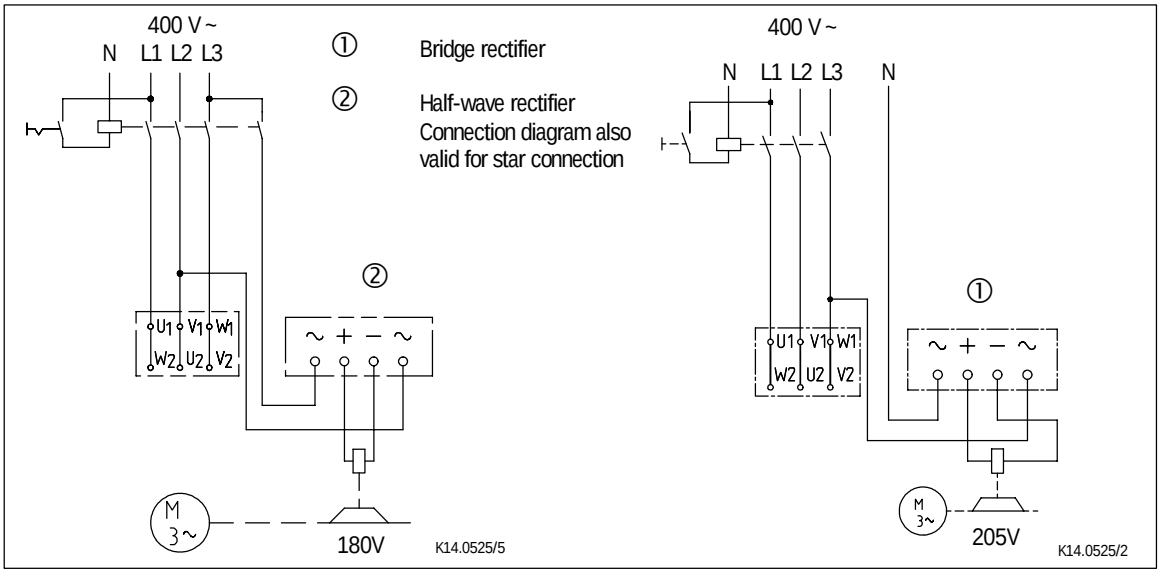

FIG 13 AC switching, delayed engagement

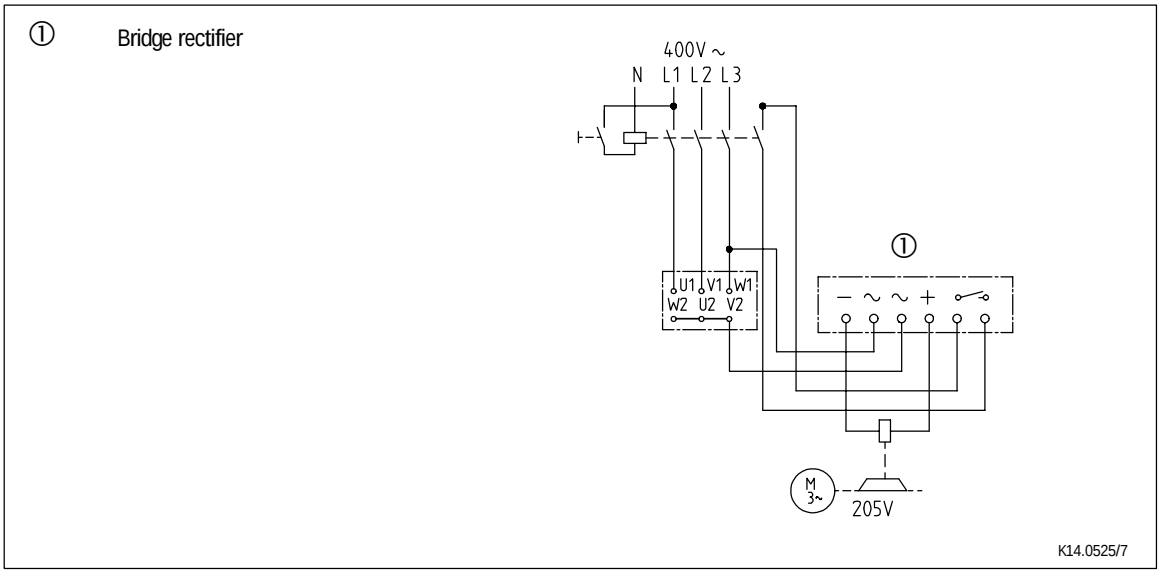

FIG 14 DC switching, normal engagement

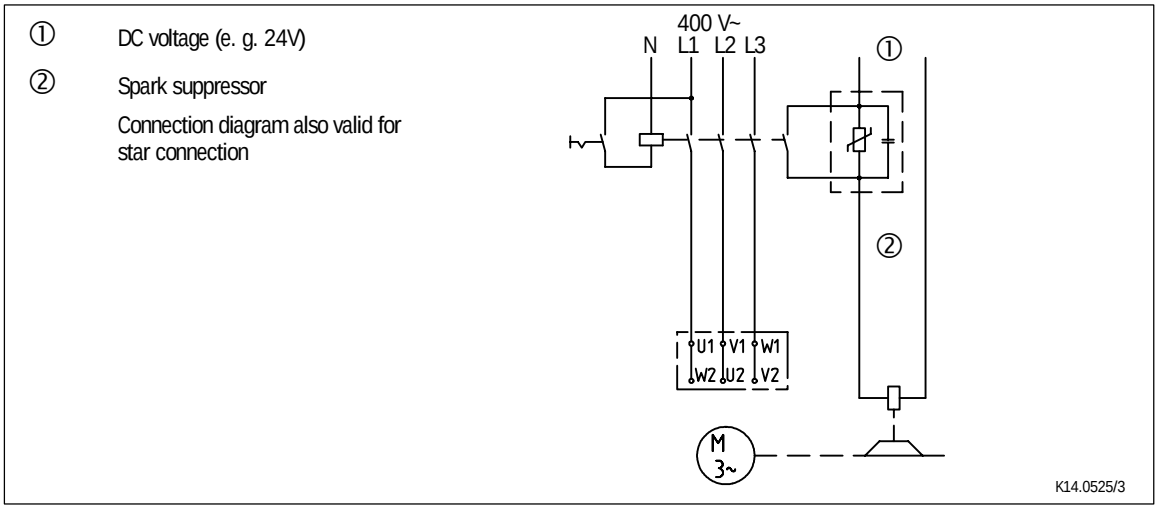

FIG 15 Separated DC voltage, switching on the DC side

Stop!
For switching on the DC side the brake must be operated with a spark suppressor, to avoid impermissible overvoltages.

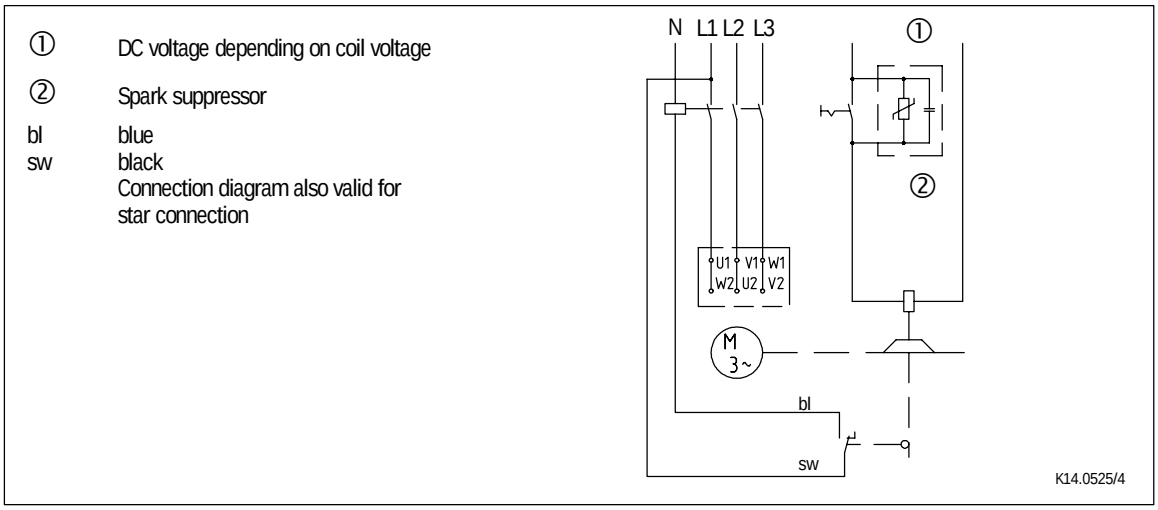

FIG 16 With microswitch / release check

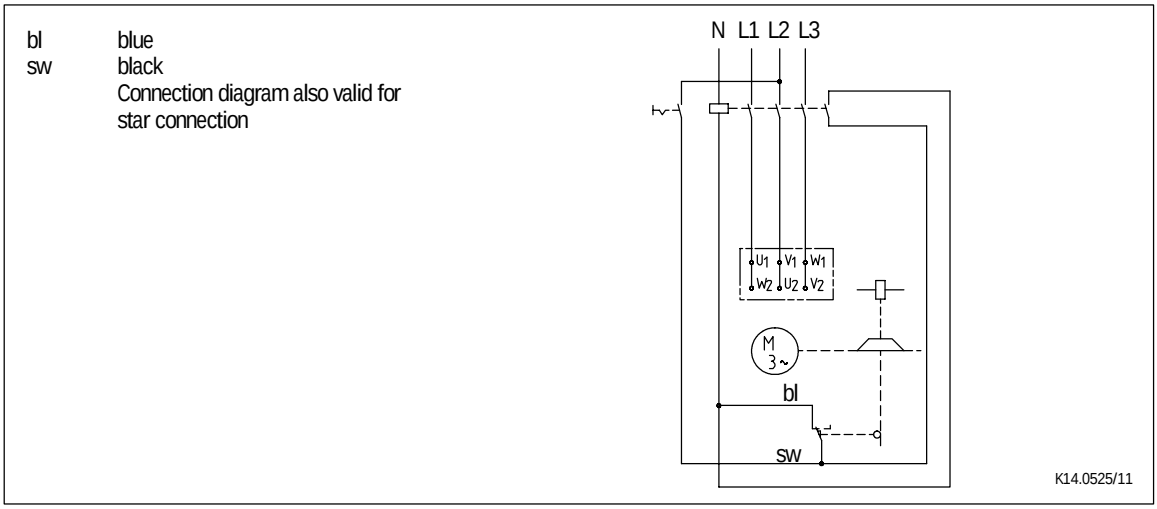

FIG 17 With microswitch / wear check addition for all circuits

Tip!

During operation according to fig. 17 the air gap is only monitored when no voltage is applied to the brake. This makes sense because it is possible that when the current flows only one side of the armature plate is attracted at first. This misalignment may cause a simulation of the maximum air gap and the actuation of the microswitch. If there is no closed contact in parallel to the microswitch contact, motor and brake will be switched off. The microswitch contact is closed again when the armature plate is completely released - the release is repeated again - because of the small difference-contact travel of the microswitch.

To avoid this misinterpretation of the microswitch signal, the signal should only be processed when no voltage is applied to the brake.

1. Install the rectifier in the terminal box. For motors with insulation class H, the rectifier must be installed in the control cabinet. The permissible ambient temperature for the rectifier is -25°C to +80°C
2. Compare the coil voltage of the stator (7) to the DC voltage of the installed rectifier.
3. Select the suitable circuit diagram. Convert the values to deviating AC voltage, e.g. with a 380 V bridge rectifier:

   380/400x205 = 195V

   Deviations up to 3% are tolerable.
4. Motor and brake must be wired according to the requirements of the engagement time. Special units are available for especially demanding requirements.

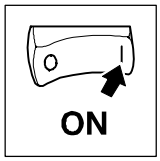

5 Commissioning and operation

Warning!
The live connections and the rotating rotor must not be touched!
The motor must not be connected when checking the brake.

5.1 Operational test

For faults see chapter 7 Troubleshooting and fault elimination.

5.1.1 Release / voltage check

For brakes without microswitch only

Warning!
The brake must be free of residual torque. The motor must not rotate.

Warning!
Live connections must not be touched.

1. Remove two bridges from the motor terminals. Do not switch off the DC brake supply. When connecting the rectifier to the neutral point of the motor, the PE conductor must also be connected to this point.
2. Connect the mains supply.
3. Measure the DC voltage at the brake.
4. Compare the DC voltage with the voltage indicated on the nameplate. A 10% deviation is permissible.
5. Check air gap $s_{Lü}$. It must be zero and the rotor must rotate freely.
6. Switch off the current.
7. Bolt bridges to the motor terminals. Remove additional PEN conductor.

5.1.2 Microswitch - release check

Warning!
The brake must be free of residual torque. The motor must not rotate.

Warning!
Live connections must not be touched.

1. Remove two bridges from the motor terminals. Do not switch off the DC brake supply.
2. Apply DC voltage to the brake.
3. Measure the AC voltage at the motor terminals. It must be zero.
4. Connect the mains supply for the brake.
5. Measure the AC voltage at the motor terminals. It must be the same as the mains voltage.
6. Measure the DC voltage at the brake.
7. Compare the DC voltage with the voltage indicated on the nameplate. A 10% deviation is permissible.
8. Check air gap $s_{Lü}$. It must be zero and the rotor must rotate freely.
9. Disconnect the mains supply.
10. Disconnect the DC voltage.
11. Bolt bridges to the motor terminals.

5.1.3 Microswitch - wear check

Warning!
The brake must be free of residual torque. The motor must not rotate.

Warning!
Live connections must not be touched.

1. Remove two bridges from the motor terminals. Do not switch off the DC voltage for the brake. When connecting the rectifier to the neutral point of the motor, the PE conductor must also be connected to this point.
2. Set air gap to $s_{Lümax}$. See chapter 4.3.2 Step 5-6.

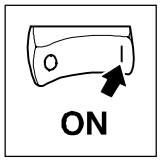

3. Disconnect the mains supply.
4. Measure the AC voltage at the motor terminals and the DC voltage at the brake. Both must be zero.
5. Disconnect the mains supply.
6. Set air gap to $s_{Lürated}$. See chapter 4.3.2 Step 5-6.
7. Disconnect the mains supply.
8. Measure the AC voltage at the motor terminals. It must be the same as the mains voltage.
9. Measure the DC voltage at the brake.
10. Compare the DC voltage with the voltage indicated on the nameplate. A 10% deviation is permissible.
11. Check air gap $s_{Lü}$. It must be zero and the rotor must rotate freely.
12. Do not switch off the DC brake current.
13. Bolt bridges to the motor terminals. Remove additional PEN conductor.

5.1.4 Manual release

This operational test is to be carried out additionally.

Warning!
The brake must be free of residual torque. The motor must not rotate.

1. Pull the lever (FIG 18) with approx. 150 N towards the motor until the resistances increase strongly.

Stop!
Additional tools to facilitate brake release are not allowed! (e.g. extension piece)

2. The rotor must rotate freely. Small residual torques are permissible.
3. Release the lever.

5.2 Decreasing brake torque (only for stators type E)

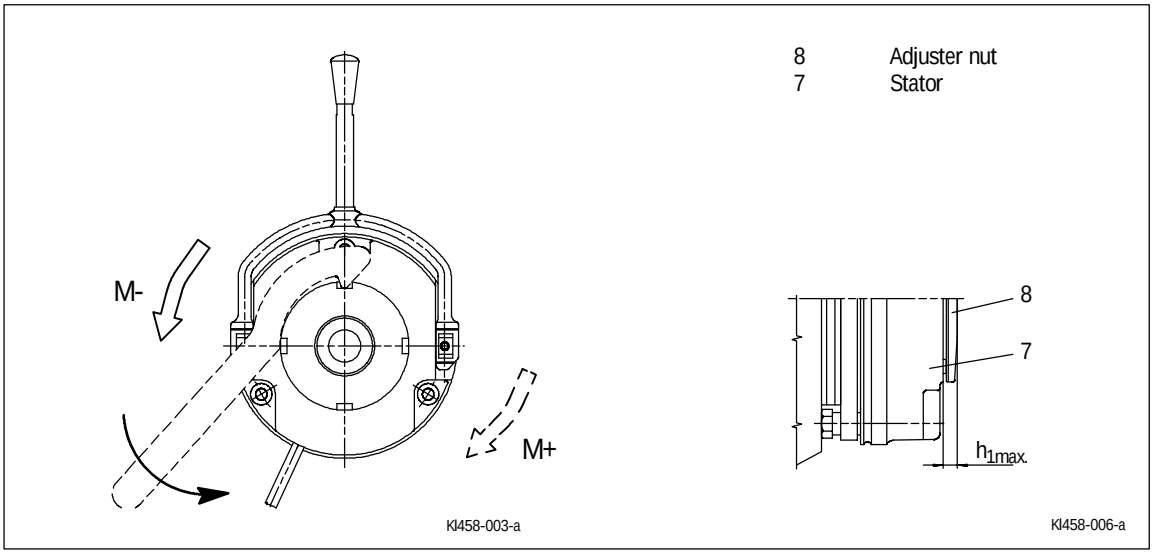

FIG 18

1. Turn the adjuster nut (8) counterclockwise using the hook wrench.

- Observe the notches. Position between notches are impermissible. (Values for the brake torque reduction see chapter 3.2.1).
- The maximum permissible projection h_{1max} of the adjuster nut (8) to the stator (7) are to be observed (values for h_{1max} see chapter 3.3).

Warnung!
The reduction of the brake torque does not increase the maximum permissible air gap $s_{Lümax}$.
Do not change the manual release setting for models with manual release.

5.3 During operation

- Check the brake regularly during operation. Take special care of:
  - unusual noises and temperatures
  - loose fixing elements
  - the state of the cables.
- In the event of failures, refer to the troubleshooting table in chapter 7 .If the fault cannot be eliminated, please contact the Lenze Service.

6 Maintenance / repair

6.1 Inspection intervals

The wear of the friction lining of the rotor depends of the operating conditions. The time until readjustment does not only depend on the friction work. The friction work per operation decreases steadily until readjustment takes place. High speed differences additionally reduce the friction work until readjustment. The inspection intervals must be adapted to the operating conditions and can be prolonged if the wear is small.

6.2 Inspections

6.2.1 Rotor thickness

Warning!
The motor must be at standstill when checking the rotor thickness.

1. Remove motor cover and - if mounted - remove seal.
2. Measure the rotor thickness using a caliper gauge. For brakes with friction plate: observe the flared flange at the outer diameter of the friction plate.
3. Compare the measured rotor thickness with the minimum permissible rotor thickness (see table Rated Data, chapter 3.3).
4. If necessary, replace the rotor. See chapter 6.3.2.

6.2.2 Air gap

Warning!
The motor must be at standstill when checking the air gap.

1. Measure the air gap $s_{Lü}$ between armature plate and stator using a feeler gauge.
2. Compare the measured air gap to the maximum permissible air gap $s_{Lümax}$ (see table Rated Data, chapter 3.3).
3. If necessary, adjust air gap to $s_{Lürated}$. See chapter 6.3.1.

6.2.3 Releasing / voltage

Warning!
The moving rotor must not be touched.

Warning!
Live connections must not be touched.

1. Observe air gap $s_{Lü}$ during operation of the drive. It must be zero.
2. Measure DC voltage at the brake during operation. It must be the same as the voltage indicated on the nameplate. A 10% deviation is permissible.

6.3 Maintenance

6.3.1 Readjustment of air gap

Warning!
Disconnect voltage. The brake must be free of residual torque.

Stop!
Mind the following when the model has a flange which is fixed with additional screws:
Behind the thread holes for the screws in the flange there must be clearing holes in the endshield. Without clearing holes the minimum rotor thickness cannot be used. Under no circumstances may the screws be pressed against the endshield.

1. Unbolt screws.
2. Screw the threaded sleeves into the stator by using a spanner. $^1/_6$ revolution reduced the air gap by approx. 0.15 mm.
3. Tighten screws (for torques see table Rated data, chapter 3.3).
4. Check the air gap $s_{Lü}$ close to the screws using a feeler gauge ($s_{Lürated}$ see rated data table chapter 3.3).
5. If the difference between the measured air gap and $s_{Lürated}$ is too large, repeat the readjustment.

6.3.2 Exchange rotor

Warnung!
Disconnect voltage. The brake must be free of residual torque.

1. Loosen connection cable.
2. Loosen the screws evenly and remove them.
3. Completely remove the stator from the endshield. Observe the supply cable.
4. Pull rotor from hub.
5. Check hub splining.
6. In case of wear, the hub must also be replaced.
7. Check the friction surface at the endshield. In case of strong scoring at friction plate or flange, replace the friction plate or flange. If scoring occurs at the endshield, re-finish end-shield or install a friction plate.
8. Measure the rotor thickness (new rotor) and head height of the threaded sleeves by means of a caliper gauge.
9. Calculate the distance between stator and armature plate as follows:

   Distance = Rotor thickness + $s_{Lürated}$ - head height

   ($s_{LüNenn}$ see rated data table chapter 3.3)

10. Loosen the threaded sleeves until the calculated distance between stator and armature plate is reached.
11. Install and adjust the new rotor and brake (see chapter 4.3.2).
12. Reconnect the supply cable.

6.4 Spare-parts list

Only parts with order numbers available.

The order numbers are only valid for standard versions.

6.4.1 Spare parts list for sizes 06 to 16

Pos.	Name	Variant	Order number for size					
			06	08	10	12	14	16
7	Stator complete, module E Stator complete, module N	Voltage / brake torque	398359	398360	398361	398362	398363	398364
3	Rotor (plastic) Rotor (aluminium)		384705 396186	387475 396200	----- 396202	----- 396214	----- 396215	----- 396252
4	Hub	Bore	372601	015350	015350	015351	028147	015352
10	Set of fastening screws Allen screw DIN 912	for installation at flange - for installation at motor / friction plate - for flange with through hole - for intermediate flange / double brake	399492 399500 399501 399545	399502 399504 399505 399546	399506 399507 399508 399546	399507 399509 399510 399547	399511 399512 399513 399548	399512 399513 399514 399549
13	Cover seal		116107	116144	116736	116145	120589	120590
14	Manual release		401229	401232	401233	401235	401236	401238
-----	Terminal box as attachment kit		-----	-----	-----	399940	399945	399950
6	Flange		397398	397513	397683	397747	397878	398426
	Flange hardchromed		399853	399854	399855	399856	399843	399844
12	Friction plate		397383	397514	076260	397734	397755	076264
-----	Tacho flange		395780	395781	395782	395783	395784	395785
-----	Intermediate flange / double brake		395791	395792	395793	395824	397085	397086
-----	Brake cover (enclosure acc. to IP65)		391548	391549	391550	391551	391552	391553

Position no. see fig. 19 page 42

6.4.2 Spare parts list for sizes 18 to 25

Pos.	Name	Variant	Order number for size		
			18	20	25
7	Stator complete, module E Stator complete, module N	Voltage / brake torque	398365	398366	398367
3	Rotor (aluminium)		396253	396280	396288
4	Hub	Bore	015345	015346	015347
10	Set of fastening screws Allen screw DIN 912	for installation at flange - for installation at motor / friction plate - for flange with through hole - for intermediate flange / double brake	399515 399516 ----- 399550	399517 399518 ----- 399551	399518 399520 ----- 399552
13	Cover seal		120591	120592	120593
14	Manual release		401239	401240	401241
-----	Terminal box as attachment kit		399954	399958	399962
6	Flange		398427	398428	398430
	Flange hardchromed		399845	399846	399847
12	Friction plate		-----	-----	-----
-----	Tacho flange		395786	395787	395788
-----	Intermediate flange / double brake		397088	397089	397090
-----	Brake cover (enclosure acc. to IP65)		391554	391555	391556

Position no. see fig. 19 page 42

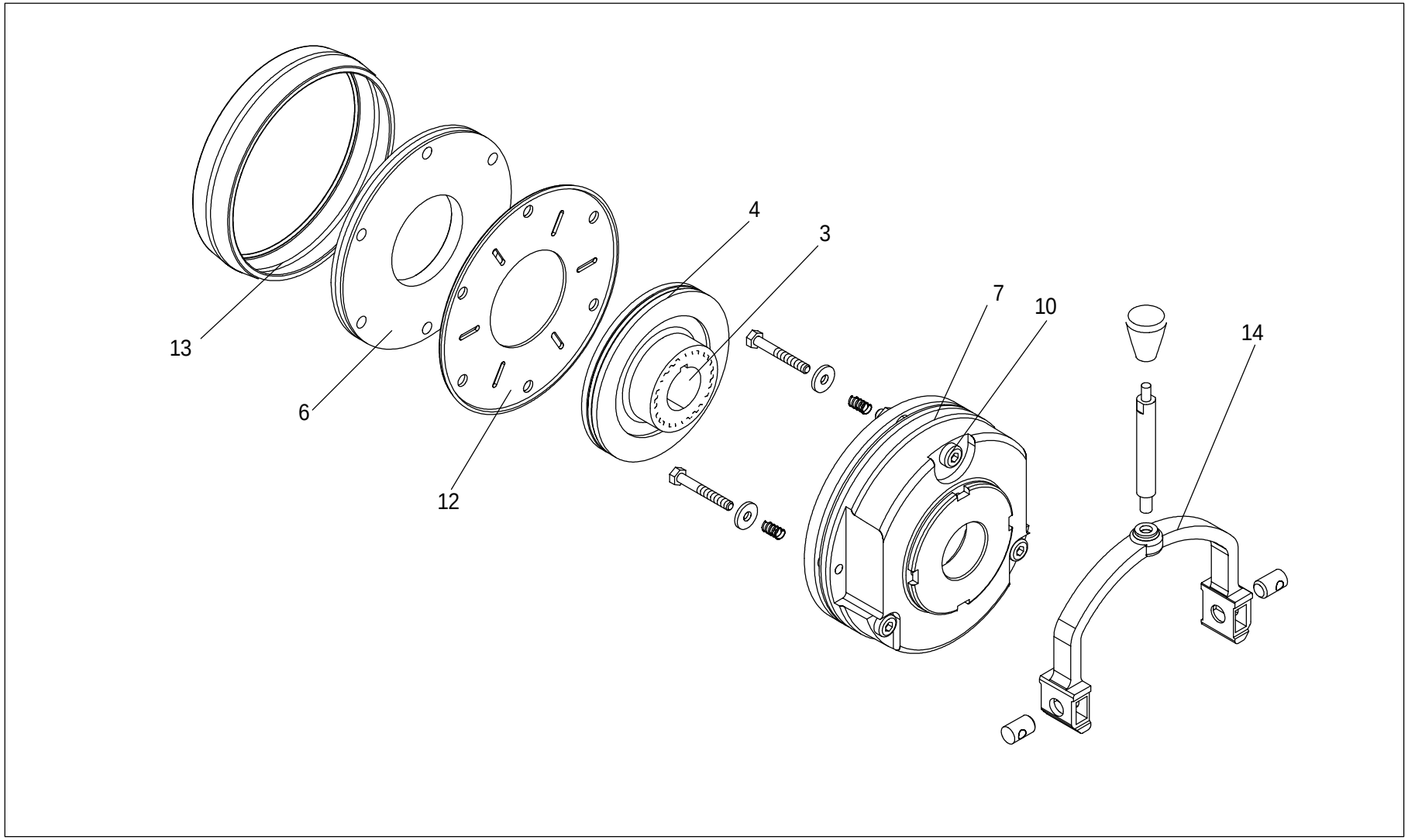

FIG 19 Spring-operated brakes BFK458-06 to 25

6.5 Order of spare parts

Receiver:

Lenze GmbH & Co. KG
Bremsen
Postfach 10 13 52
D-31763 Hameln
Fax: (+49) 51 54 - 82 11 07

Spring-applied brake BFK458 with accessories

Sender

Company _____ Customer No. _____

Street / P.O. box _____ Order No. _____

Postal code/ City: Issuer _____

Delivery address * _____ Phone _____

_____ Fax _____

Invoice addressee* _____

Date of delivery _____

*Please indicate, if different from sender Date_____ Signature _____

BFK 458-□□□ / Stator complete

Order quantity _____pcs.

Size ☐ **06** ☐ **08** ☐ **10** ☐ **12** ☐ **14** ☐ **16** ☐ **18** ☐ **20** ☐ **25**

Design ☐ **E** (with adjuster nut) ☐ **N** (without adjuster nut)

Voltage ☐ **24V** ☐ **96V** ☐ **103V** ☐ **170V** ☐ **180V** ☐ **190V** ☐**205V**

Brake torque _____Nm (see torque ranges)

Cable length ☐ **Standard**
_____ mm (from 100 mm to 1000 mm in steps of 100 mm,
from 1000 mm to 2500 mm in steps of 250 mm),

Hand release ☐ **mounted**

Armature plate ☐ **Standard**
☐hardchromed (as from size 14)
☐ low noise (O-ring design)
☐ with pole shim / brass film

Microswitch ☐ Monitoring of the operation (as from size 12)
☐ Wear monitoring (as from size 12)

Terminal box ☐ mounted (as from size 12)

Accessories

Rotor	☐ **Plastic** (only for size 06/08)	☐ **Aluminium**	☐ **low-noise version** (Rotor with sleeve)
Hub	_____mm (for bore diameter, see dimensions)		
Set of fixing screws	☐ for mounting to the flange ☐ for mounting to the motor / friction plate ☐ for flange with through hole (up to and incl. size 16) ☐ for intermediate flange / double brake		
Hand release	☐ as attachment kit		
Terminal box	☐ as attachment kit		
Flange	☐ Friction plate (up to size 16) ☐ Flange ☐ Tacho flange ☐ intermediate flange / double brake		
Sealing	☐ Seal ☐ Sealring (shaft diameter on request) ☐ Sealing cap ☐ Brake cover		

Electrical accessories

Bridge rectifier	☐ 4-pole without stud ☐ 4-pole with stud ☐ 6-pole vertical, integrated spark suppressor ☐ 6-pole horizontal, integrated spark suppressor
Half-wave rectifier	☐ 4-pole without stud ☐ 4-pole with stud ☐ 6-pole vertical, integrated spark suppressor ☐ 6-pole horizontal, integrated spark suppressor
Spark suppressor	☐

7 Troubleshooting and fault elimination

Fault	Cause	Remedy
Brake does not release, air gap is not zero	Coil is interrupted	• Measure the coil resistance using a multimeter: - If the resistance is too high, replace the entire stator.
	Coil has contact to ground or between the windings	• Measure the coil resistance using a multimeter: - Compare measured resistance to rated resistance. For values see rated data chapter 3.3. If the resistance is too low, replace the entire stator. • Check coil for contact to ground using a multimeter: - In case of contact to ground, replace the entire stator. • Check brake voltage (see defective rectifier, voltage too low).
	Wiring wrong or defective	• Check and correct wiring. • Check cable for continuity using a multimeter: - Replace defective cable.
	Rectifier defective or wrong	• Measure DC voltage at the rectifier using a multimeter: If DC voltage is zero: • Measure AC voltage at the rectifier. If AC voltage is zero: - Apply voltage, - check fuse, - check wiring If AC voltage is o.k.: - Check rectifier - replace defective rectifier If DC voltage is too low: - Check rectifier - Half-wave rectifier used instead of bridge rectifier. Install bridge-rectifier - If diode is defective, use suitable new rectifier. • Check coil for contact to ground or between the phases. • If rectifier defect occurs several times, replace the entire stator, even if a contact to ground or between the windings cannot be measured. The fault may occur only in the warm state.
	Incorrect wiring of microswitch	Check the wiring of the microswitch and correct it.
	Incorrect setting of microswitch	Replace the stator completely and complain to the manufacturer about the microswitch setting.
	Air gap too large	Readjust the air gap (chapter 6.3.1)

Fault	Cause	Remedy
Rotor cannot rotate freely	Incorrect adjustment of manual release	Check $s+s_{Lü}$ when current is applied to the brake. The value must be the same at both ends. Correct if necessary.
	Air gap $s_{Lü}$ too small	Check air gap $s_{Lü}$ and if necessary readjust it (chapter 6.3.1).
Rotor thickness too small	Rotor was not replaced in time	Replace rotor (chapter 6.3.2)
Voltage is not zero when checking the operation (6.2.2 or 6.2.3)	Incorrect wiring of microswitch	Check the wiring of the microswitch and correct it.
	Defective microswitch or incorrect setting	Replace the entire stator and return it to the manufacturer.
Voltage too high	Brake voltage does not match with rectifier	Adapt rectifier and brake voltage to each other.
Voltage too low	Brake voltage does not match with rectifier	Adapt rectifier and brake voltage to each other.
	Defective rectifier diode	Replace rectifier by a suitable new one.
AC voltage is not mains voltage	Fuse missing or defective	Select connection where fuse has not been removed and is o.k.
	Incorrect wiring of microswitch	Check the wiring of the microswitch and correct it.
	Defective microswitch or incorrect setting	Replace the entire stator and return it to the manufacturer.

Lenze

Brakes and clutches

Lenze GmbH & Co KG
Bremsen
Postfach 10 13 52
D-31763 Hameln

Site:
Wülmser Weg 5
D-31855 Aerzen
Telephone (05154) 82-0
Telefax (05154) 82-11 07

EG-Declaration of Conformity

for the purpose of the EC Low-Voltage Directive(73/23/EEC)

amended by: CE-mark Directive (93/68/EEC)

The following products were developed, designed, and manufactured in compliance with the above-mentioned EC Directive under the sole resposibility of

Lenze GmbH & Co KG Bremsen, Postfach 10 13 52, D-31763 Hameln

Product:	**Type:**		
Electromagnetically released spring-operated brakes	BFK454-□□ 14.442.□□ 14.449.□□	BFK457-□□ 14.444.□□ 14.450.□□	BFK458-□□ 14.448
Permanent-magnet brakes	14.118.□□		
Electromagnetic clutches	14.101.□□	14.105.□□	
Electromagnetic brakes	14.111.□□,	14.115.□□	
Clutch-brake units	14.137.□□ 14.810.□□ 14.852.□□ 14.856.□□ 14.863.□□ 14.867.□□	14.138.□□ 14.820.□□ 14.853.□□ 14.857.□□ 14.865.□□	14.800.□□ 14.830.□□ 14.855.□□ 14.862.□□ 14.866.□□

Applied standards and regulations:

VDE 0470 (EN 60529)	Rotating electrical machines
VDE 0580	Electromagnetic devices

Product:	**Type:**		
Rectifiers	14.630.13.□□ 14.630.33.□□	14.630.14.□□ 14.630.21.□□□	14.630.32.□□ 14.630.22.□□□
Spark suppressors	14.198.00.02.□□	14.198.00.03.□□	
SEGC-Contaxt	14.611.30.□□□	14.611.38.□□□	
SFast excitation devices	14.611.12.□□ 14.621.13.□□	14.611.14.□□ 14.621.14.□□	14.611.16.□□
Electronic switch devices	14.610.11.048	14.640.10.048	

Applied standards and regulations:

VDE 0411, Teil 1 (EN 61010-1)	Safety requirements for electrical equipment for measurement, control and laboratory use

Aerzen, June 14, 1999

Brendler

- - - - - - - - - - - - - - - - - - - -
(ppa.Brendler)
Head of Sales and R & D

Declaration of Conformity/Manufacturer's Certification

Lenze

Brakes and clutches

Lenze GmbH & Co KG
Bremsen
Postfach 10 13 52
D-31763 Hameln

Site:
Wülmser Weg 5
D-31855 Aerzen
Telephone (05154) 82-0
Telefax (05154) 82-11 07

Manufacturer's Certification

for the purpose of the EC Machinery Directive (98/37/EG)

We herewith certify that the below listed products are intended for assembly into a machine or for assembly with other elements fo form a machine. Commissioning of the machine is prohibited before it is proven that it correponds to the EC regulation 98/37/EC.

Product:	**Type:**		
Electromagnetically released spring-operated brakes	BFK454-□□ 14.442.□□ 14.449.□□	BFK457-□□ 14.444.□□ 14.450.□□	BFK458-□□ 14.448
Permanent-magnet brakes	14.118.□□		
Electromagnetic clutces	14.101.□□	14.105.□□	
Electromagnetic brakes	14.111.□□,	14.115.□□	
Clutch-brake units	14.137.□□ 14.810.□□ 14.852.□□ 14.856.□□ 14.863.□□ 14.867.□□	14.138.□□ 14.820.□□ 14.853.□□ 14.857.□□ 14.865.□□	14.800.□□ 14.830.□□ 14.855.□□ 14.862.□□ 14.866.□□

Applied standards and regulations:

VDE 0470 (EN 60529)	Rotating electrical machines
VDE 0580	Electromagnetic devices

Aerzen, June 15,1999

Brendler

- - - - - - - - - - - - - - - - - - - -

(ppa.Brendler)
Head of Sales and R & D

FLENDER	FLENDER – Zahnradgetriebe Gear unit Ersatzteilzeichnung/ Spare part drawing	Bauart / Type K3UF Größe / Size 5-8	Ausführung / Design H/G

Bei Korrespondenz bitte angeben / Please quote in correspondence | EZ

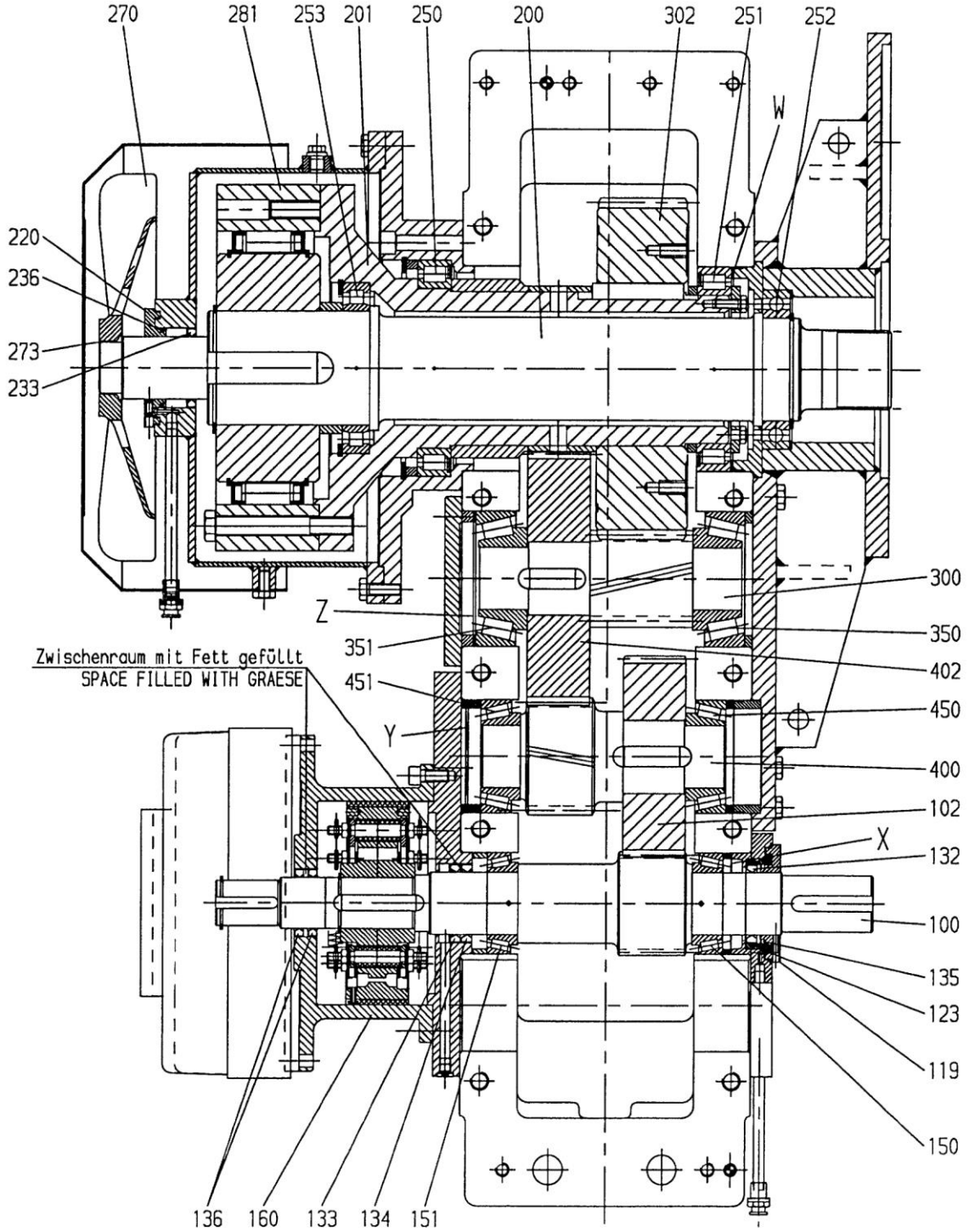

W,X,Y,Z = Paßscheibe / Shim

2005-08-02

FLENDER-Getriebewerk Penig GmbH, Thierbacher Str. 24, 09320 Penig, Tel. 037381/60, Telefax 0373816286	Datum / Date 2002-06-18	Name/Name Eichler	ZGE
		Y 6 008 616	a

Diese technische Unterlage hat gesetzlichen Schutz (DIN 34)

FLENDER	Ersatzteilliste (EL) Spare parts list	Bauart K3UF Type Größe 6,0 Size Übersetzung 28,608 ratio	Seite Page 1/2

Bei Korrespondenz bitte angeben
Please quote in correspondence **EL 4190294-200 DE/EN**

Hierzu gehört Zeichnungs-Nr.
Please refer to DWG No. **6008616**

	Teil-Nr. Part No.	Menge No. off		Benennung Description	Zeichnungs-Nr. Drawings No.	Material-Nr. Ident no.	Gw(kg) Weight
E	0100	1	ST	STRDWELLE D79,03X577 1.6587 PINION SHAFT D79,03X577 1.6587	6046354/A	000.001.260.094	10,8
E	0102	1	ST	STIRNRAD R 130,0/2,54 1.6587 GEAR WHEEL R 130,0/2,54 1.6587	5880842/B	000.000.560.842	10,2
E	0119	1	ST	RINGTRAEGER D98/55X17 C45 Ring carrier	8761311/A	026.787.613.118	0,5
E	0123	2	ST	O-RING OR0074 -03 W 5713 72NBR872 O-RING OR0074 -03 W 5713 72NBR872		000.000.243.323	0,0
E	0132	1	ST	WDR 055X070X08 BAUMSL W 5710 75FPM585 SHAFT SEAL 055X070X08 BAUMSL W 5710		000.000.306.052	0,0
E	0133	1	ST	WDR 055X070X08 BAUMSL W 5710 75FPM585 SHAFT SEAL 055X070X08 BAUMSL W 5710		000.000.306.052	0,0
E	0134	1	ST	WDR 55X70X10 BAUM W5710 75FKM585 SHAFT SEAL 55X70X10 BAUM W5710 75FKM585		002.900.076.606	0,0
E	0135	3	ST	RING,AS 070/03,1X0,82 W 5730 FED-ST LAMELLAR RING, AS (FEY) 070/03,1X0,82 W		000.000.347.199	0,1
E	0136	2	ST	WDR 42X62X8 BAUM 75FPM585 SHAFT SEAL 42X62X8 BAUM 75FPM585		000.050.027.652	0,1
E	0150	1	ST	WAELZL 33011 D 720 ST-KAEF ROLLING CONTACT BEARING 33011 D 720		000.000.777.665	0,7
E	0151	1	ST	WAELZL 33011 D 720 ST-KAEF ROLLING CONTACT BEARING 33011 D 720		000.000.777.665	0,7
E	0160	1	ST	TROMMEL-BREMS K3UF5/6 - FB180 C45N80 Brake drum	8762258/-	027.987.622.588	12,6
E	0200	1	ST	WELLE D109X803 34CRNIMO6 K3/K4 06 SHAFT D109X803 34CRNIMO6 K3/K4 06		000.001.255.247	41,8
E	0201	1	ST	WELLE-FLANSCH 322X0372 C60+N FLANGED SHAFT 322X0372 C60+N	8895938/A	000.000.695.938	35,1
E	0220	1	ST	RINGTRAEGER055X104,0X19 C45 RING CARRIER055X104,0X19 C45	5877840/-	000.000.677.840	0,6
E	0233	1	ST	WDR 055X070X08 BAUMSL W 5710 75FPM585 SHAFT SEAL 055X070X08 BAUMSL W 5710		000.000.306.052	0,0
E	0236	3	ST	RING,AS 070/03,1X0,82 W 5730 FED-ST LAMELLAR RING, AS (FEY) 070/03,1X0,82 W		000.000.347.199	0,1
E	0250	1	ST	WAELZL182928 SL ROLLING CONTACT BEARING182928 SL		000.000.379.145	2,6
E	0251	1	ST	WAELZL 182930 SL ROLLING CONTACT BEARING 182930 SL		000.050.003.926	3,8
E	0252	1	ST	WAELZL 6020 D 625 MET-KAEF ROLLING CONTACT BEARING 6020 D 625		000.000.380.620	1,4
E	0253	1	ST	WAELZL 1020 NU MA/C3 D 5412 MS-KAEF ROLLING CONTACT BEARING 1020 NU MA/C3 D		000.000.380.428	2,0
E	0270	1	ST	LUEFTER 340/ 45 AC45000 FAN 340/ 45 AC45000	5882387/E	000.000.562.387	1,5
E	0273	1	ST	RING-TOL BN0820-045-02 W 3372 FED-ST DISTANCE RING BN0820-045-02 W 3372		000.000.346.005	0,0

Die mit * gekennzeichneten Teile gehören zu einer Baugruppe (G). Die Baugruppe ist nur komplett auszutauschen.
The parts marked with * belong to a subassembly (G). The subassemblymust be replaced complete.

FLENDER	Ersatzteilliste (EL) Spare parts list	Bauart K3UF Type Größe 6,0 Size Übersetzung 28,608 ratio	Seite Page 2/2

Bei Korrespondenz bitte angeben
Please quote in correspondence **EL 4190294-200 DE/EN**

Hierzu gehört Zeichnungs-Nr.
Please refer to DWG No. **6008616**

	Teil-Nr. Part No.	Menge No. off		Benennung Description	Zeichnungs-Nr. Drawings No.	Material-Nr. Ident no.	Gw(kg) Weight
E	0281	1	ST	RS FXM 200- 63SX/H100 W 5813 ST BACKSTOP FXM 200- 63SX/H100 W 5813 ST		000.000.389.016	52,0
E	0300	1	ST	STRDWELLE R 185,0/3,94 1.6587 PINION SHAFT R 185,0/3,94 1.6587	5875775/A	000.000.675.775	6,3
E	0302	1	ST	STIRNRAD L 220,0/4,89 1.6587 GEAR WHEEL L 220,0/4,89 1.6587	5875752/B	000.000.675.752	54,4
E	0350	1	ST	WAELZL 32311 B D 720 ST-KAEF ROLLING CONTACT BEARING 32311 B D 720		000.000.380.564	2,5
E	0351	1	ST	WAELZL 32311 B D 720 ST-KAEF ROLLING CONTACT BEARING 32311 B D 720		000.000.380.564	2,5
E	0400	1	ST	STRDWELLE L 157,0/2,31 1.6587 PINION SHAFT L 157,0/2,31 1.6587	5886512/-	000.000.666.512	7,5
E	0402	1	ST	STIRNRAD R 157,0/2,31 1.6587 GEAR WHEEL R 157,0/2,31 1.6587	5886513/-	000.000.666.513	14,5
E	0450	1	ST	WAELZL 33211 D 720 ST-KAEF ROLLING CONTACT BEARING 33211 D 720		000.000.379.174	1,2
E	0451	1	ST	WAELZL 33211 D 720 ST-KAEF ROLLING CONTACT BEARING 33211 D 720		000.000.379.174	1,2

FLENDER	Ersatzteilliste (EL) Spare parts list	Bauart K3UF Type Größe 6,0 Size Übersetzung 28,608 ratio	Seite Page 1/2

Bei Korrespondenz bitte angeben
Please quote in correspondence **EL 4190294-220 DE/EN**

Hierzu gehört Zeichnungs-Nr.
Please refer to DWG No. **6008616**

	Teil-Nr. Part No.	Menge No. off		Benennung Description	Zeichnungs-Nr. Drawings No.	Material-Nr. Ident no.	Gw(kg) Weight
E	0100	1	ST	STRDWELLE D79,03X577 1.6587 PINION SHAFT D79,03X577 1.6587	6046354/A	000.001.260.094	10,8
E	0102	1	ST	STIRNRAD R 130,0/2,54 1.6587 GEAR WHEEL R 130,0/2,54 1.6587	5880842/B	000.000.560.842	10,2
E	0119	1	ST	RINGTRAEGER D98/55X17 C45 Ring carrier	8761311/A	026.787.613.118	0,5
E	0123	2	ST	O-RING OR0074 -03 W 5713 72NBR872 O-RING OR0074 -03 W 5713 72NBR872		000.000.243.323	0,0
E	0132	1	ST	WDR 055X070X08 BAUMSL W 5710 75FPM585 SHAFT SEAL 055X070X08 BAUMSL W 5710		000.000.306.052	0,0
E	0133	1	ST	WDR 055X070X08 BAUMSL W 5710 75FPM585 SHAFT SEAL 055X070X08 BAUMSL W 5710		000.000.306.052	0,0
E	0134	1	ST	WDR 55X70X10 BAUM W5710 75FKM585 SHAFT SEAL 55X70X10 BAUM W5710 75FKM585		002.900.076.606	0,0
E	0135	3	ST	RING,AS 070/03,1X0,82 W 5730 FED-ST LAMELLAR RING, AS (FEY) 070/03,1X0,82 W		000.000.347.199	0,1
E	0136	2	ST	WDR 42X62X8 BAUM 75FPM585 SHAFT SEAL 42X62X8 BAUM 75FPM585		000.050.027.652	0,1
E	0150	1	ST	WAELZL 33011 D 720 ST-KAEF ROLLING CONTACT BEARING 33011 D 720		000.000.777.665	0,7
E	0151	1	ST	WAELZL 33011 D 720 ST-KAEF ROLLING CONTACT BEARING 33011 D 720		000.000.777.665	0,7
E	0160	1	ST	TROMMEL-BREMS K3UF5/6 - FB180 C45N80 Brake drum	8762258/-	027.987.622.588	12,6
E	0200	1	ST	WELLE D109X803 34CRNIMO6 K3/K4 06 SHAFT D109X803 34CRNIMO6 K3/K4 06		000.001.255.247	41,8
E	0201	1	ST	WELLE-FLANSCH 322X0372 C60+N FLANGED SHAFT 322X0372 C60+N	8895938/A	000.000.695.938	35,1
E	0220	1	ST	RINGTRAEGER055X104,0X19 C45 RING CARRIER055X104,0X19 C45	5877840/-	000.000.677.840	0,6
E	0233	1	ST	WDR 055X070X08 BAUMSL W 5710 75FPM585 SHAFT SEAL 055X070X08 BAUMSL W 5710		000.000.306.052	0,0
E	0236	3	ST	RING,AS 070/03,1X0,82 W 5730 FED-ST LAMELLAR RING, AS (FEY) 070/03,1X0,82 W		000.000.347.199	0,1
E	0250	1	ST	WAELZL182928 SL ROLLING CONTACT BEARING182928 SL		000.000.379.145	2,6
E	0251	1	ST	WAELZL 182930 SL ROLLING CONTACT BEARING 182930 SL		000.050.003.926	3,8
E	0252	1	ST	WAELZL 6020 D 625 MET-KAEF ROLLING CONTACT BEARING 6020 D 625		000.000.380.620	1,4
E	0253	1	ST	WAELZL 1020 NU MA/C3 D 5412 MS-KAEF ROLLING CONTACT BEARING 1020 NU MA/C3 D		000.000.380.428	2,0
E	0270	1	ST	LUEFTER 340/ 45 AC45000 FAN 340/ 45 AC45000	5882387/E	000.000.562.387	1,5
E	0273	1	ST	RING-TOL BN0820-045-02 W 3372 FED-ST DISTANCE RING BN0820-045-02 W 3372		000.000.346.005	0,0

Die mit * gekennzeichneten Teile gehören zu einer Baugruppe (G). Die Baugruppe ist nur komplett auszutauschen.
The parts marked with * belong to a subassembly (G). The subassemblymust be replaced complete.

FLENDER	Ersatzteilliste (EL) Spare parts list	Bauart K3UF Type Größe 6,0 Size Übersetzung 28,608 ratio	Seite Page 2/2

Bei Korrespondenz bitte angeben
Please quote in correspondence **EL 4190294-220 DE/EN**

Hierzu gehört Zeichnungs-Nr.
Please refer to DWG No. **6008616**

	Teil-Nr. Part No.	Menge No. off		Benennung Description	Zeichnungs-Nr. Drawings No.	Material-Nr. Ident no.	Gw(kg) Weight
E	0281	1	ST	RS FXM 200- 63SX/H100 W 5813 ST BACKSTOP FXM 200- 63SX/H100 W 5813 ST		000.000.389.016	52,0
E	0300	1	ST	STRDWELLE R 185,0/3,94 1.6587 PINION SHAFT R 185,0/3,94 1.6587	5875775/A	000.000.675.775	6,3
E	0302	1	ST	STIRNRAD L 220,0/4,89 1.6587 GEAR WHEEL L 220,0/4,89 1.6587	5875752/B	000.000.675.752	54,4
E	0350	1	ST	WAELZL 32311 B D 720 ST-KAEF ROLLING CONTACT BEARING 32311 B D 720		000.000.380.564	2,5
E	0351	1	ST	WAELZL 32311 B D 720 ST-KAEF ROLLING CONTACT BEARING 32311 B D 720		000.000.380.564	2,5
E	0400	1	ST	STRDWELLE L 157,0/2,31 1.6587 PINION SHAFT L 157,0/2,31 1.6587	5886512/-	000.000.666.512	7,5
E	0402	1	ST	STIRNRAD R 157,0/2,31 1.6587 GEAR WHEEL R 157,0/2,31 1.6587	5886513/-	000.000.666.513	14,5
E	0450	1	ST	WAELZL 33211 D 720 ST-KAEF ROLLING CONTACT BEARING 33211 D 720		000.000.379.174	1,2
E	0451	1	ST	WAELZL 33211 D 720 ST-KAEF ROLLING CONTACT BEARING 33211 D 720		000.000.379.174	1,2

FLENDER	Documentation chart	SHARGH CEMENT
Please quote in correspondence		TD 4190294 EN

Order-no.: 4-0545011-64837

Item	Product	Documents / Operating instructions			Page
00	Drive system	Technical data	TD 4190294 EN		3
		Dimension drawing	6 084 316 d 6 010 765 a 6 043 978 -		4-6
20/ 60	Universal joint shaft flange	Dimension drawing	6 108 385 a		7
		Spare part drawing			
		Parts list	SL 4190294-020 EN SL 4190294-060 EN		8-9
40	Universal joint shaft	Operating instructions	BA GWB.GLW.000 EN	Universal joint shaft	10-25
80/ 120	Gear unit P2DA 23	Operating instructions	BA 4190294 EN	Gear unit	26-73
			BA 7300 EN 01.05	Lubricants	74 –101
			B 6100 EN 03.02	Resistance thermometer	108-112
			B 5122 EN 05.95	Breather filter	113
			BA ERM.RSV.000 EN	Non-return valve	114-115
			B 5100 EN 03.02	Oil drain valve	116-117
			BA TUR.SEN.031 EN	Pulse transmitter	118
		Dimension drawing	See item 00		4-6
		Spare part drawing	8 898 116 b		119
		Spare parts list	EL 4190294-080 DE/EN EL 4190294-100 DE/EN EL 4190294-120 DE/EN EL 4190294-140 DE/EN		120-125
160	Oil supply system OWGD 5	Operating instructions	BA 9702 EN 05.98	Oil supply system	126-150
			BA ELW.HAH.000 EN	Three-way valve	151-155
			BA STE.PUM.000 EN	Gear pump	156-170
			BA 610.4234821 a	Three-phase motor	171-196
			B 5921 EN 05.95	Change-over filter	197-199
			BA SER.KUE.001	Water-oil cooler	200-205
			B 5916 EN 03.97	Non-return valve	206-207
			B 5914 EN 03.02	Manometer	208
			B 5924 EN 04.99	Thermometer	209
			B 5927 EN 09.03	Flow monitor	210-214
			BA DAN.VEN.001 EN	Water flow regulator	215-218
		Dimension drawing	6 043 465_1 a		219
		Lubrication schedule	6 043 465_2 a		220
		Connection plan	5 353 879		221-224
		List of equipment	GL 1256327 EN		225-227

A. FRIEDR. FLENDER AG, D - 46393 Bocholt
Tel. 02871/92-0; Fax 02871/922596

Datum	Name	Abt.
13.06.2006	Benning	HDVD.FR

FLENDER	Documentation chart	SHARGH CEMENT
Please quote in correspondence		TD 4190294 EN

200/ 220	Helical gear unit K3UF 6	Operating instructions	BA 5012 EN 10.98	Gear unit	228-271
			BA 7300 EN 01.05	Lubricants	272-299
		Dimension drawing	6 095 227 -		300
		Spare part drawing	6 008 616 a		301
		Spare parts list	EL 4190294-200 DE/EN EL 4190294-220 DE/EN		302-305
240	Coupling FAK 342	Operating instructions	BA 4600 EN 09.04	Coupling	306-343
		Dimension drawing	6 079 554 -		344
		Spare part drawing			
		Parts list	SL 4190294-240 DE/EN		345-346
260	EOC 115	Operating instructions	BA 4600.1 EN	EOC	347-357
		Parts list	SL 4190294-260 DE/EN		358
280	Centrifugal Brake FB 180	Operating instructions	BA 3000 EN 02.97	Brake	359-378
		Dimension drawing	5 273 774 f		379
		Spare part drawing			
		Spare parts list	SL 4190294-280 DE/EN		380
300	Brake BFK 458-25	Operating instructions	BA KL458-004a EN	Brake	381-428

Order no. - Item	:	4.190.294-80-140
Type	:	P2DA
Size	:	23
Year built	:	2006
Customer	:	F.L. SMIDTH A/S
Project	:	SHARGH CEMENT
Field of application	:	Drive for cylindrical rotary kiln
Drive motor	:	Electric motor
Required power PM	:	225 kW
Direction of rotation (mounting position 514) (looking at shaft ends)		
Input (motor side)	:	ccw
Output	:	ccw
Direction of rotation (mounting position 512) (looking at shaft ends)		
Input (motor side)	:	ccw
Output	:	ccw
Planetary helical gear unit		
Actual ratio	:	82,781
Input speed	:	810 - 1350 1/min
Output speed	:	9,78 - 16,31 1/min
Auxiliary gear unit		
Actual ratio	:	28,608
Input speed	:	1470 1/min
Output speed	:	51,38 1/min
Total weight (without oil filling)	:	~7715 kg
Overall dimensions l x b x h	:	see drawing 6 084 316
Oil quantity	:	~160 l
Oil viscosity	:	ISO VG 320 PAO-oil (synthetic oil)
Oil grade	:	see AH 4.190.294-80-140 EN
Measuring surface sound pressure level (L_{pA})	:	88 +2 dB(A)
Dimensioned drawing	:	6 084 316
Spare parts drawing	:	8 898 116
Assembly drawing (torque arm system)	:	6 010 765
Lubrication diagram	:	6 043 978

Working values

In order to achieve perfect and troublefree operation of the installation the working values of the lubrication diagram 6 043 978 should be observed.

These values have to be set at the customer's evaluation instrument.

Diese technische Unterlage hat gesetzlichen Schutz (DIN 34)

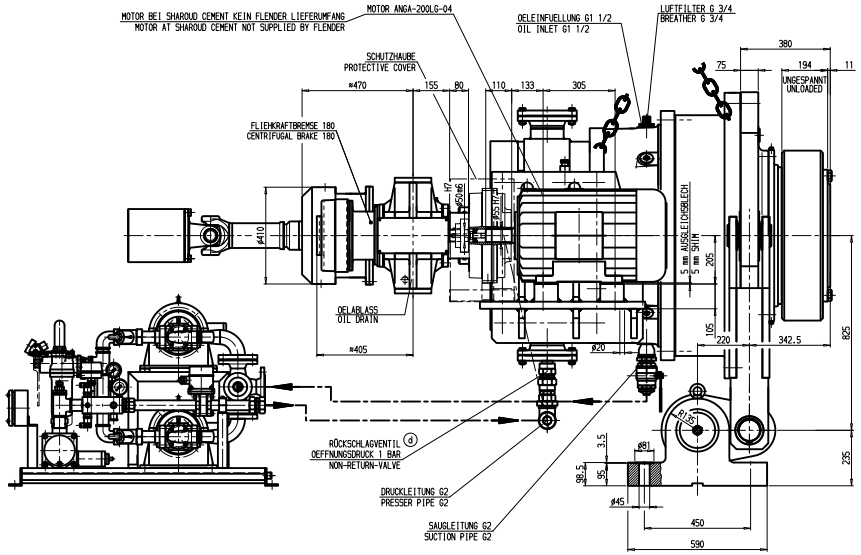

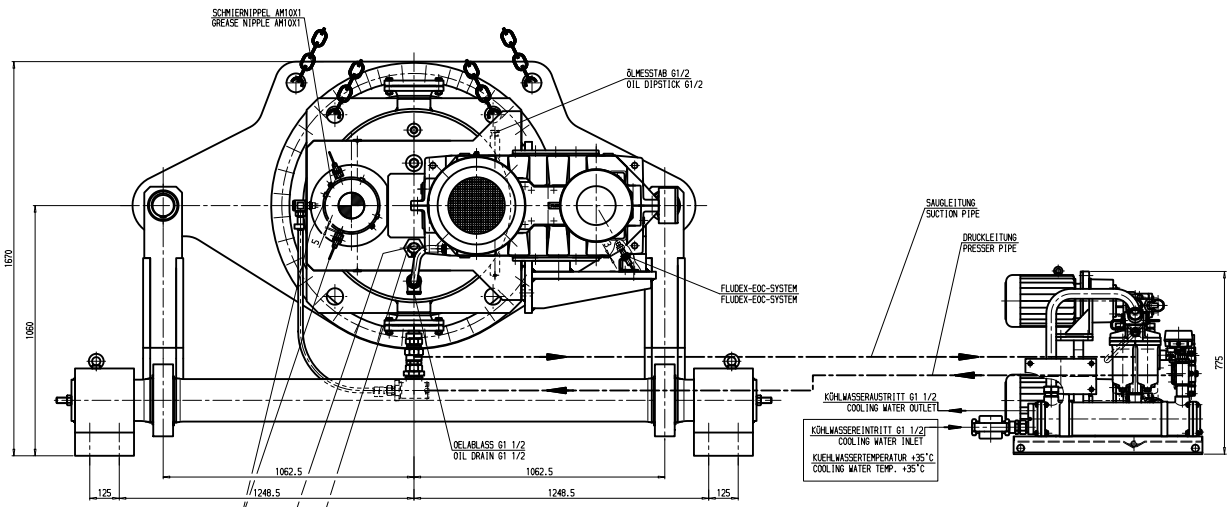

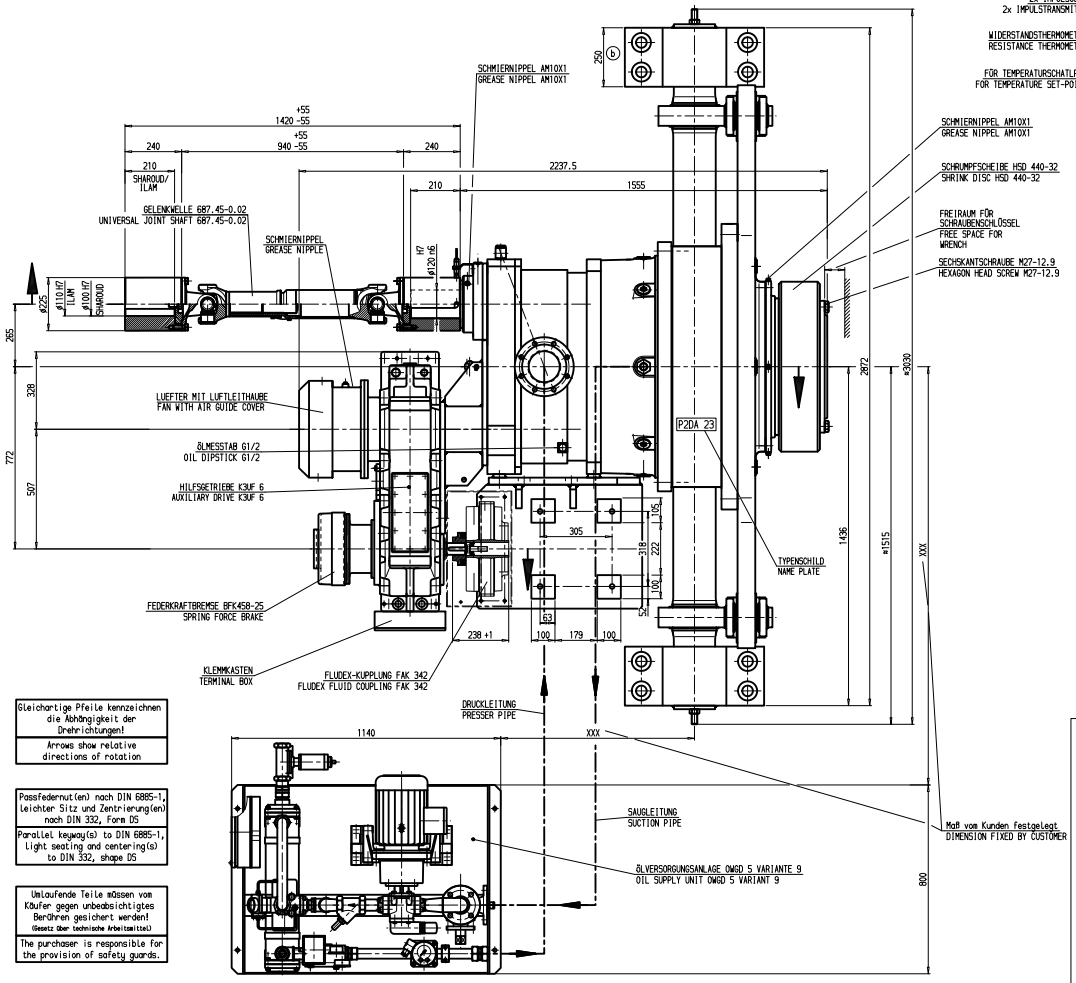

GEWICHT WEIGHT *		
P2DA 23	CA./APPROX.	4730 KG
OWGD 5	CA./APPROX.	250 KG
DREHMOMENTSTÜTZE KOMPL. TORQUE ARM ALL INC.	CA./APPROX.	1890 KG
FLUDEX-KUPPLUNG FAK 342 FLUDEX FLUID COUPLING FAK 342	CA./APPROX.	31 KG
K3UF 6	CA./APPROX.	700 KG
FB 180	CA./APPROX.	15 KG
FEDERKRAFTBREMSE BFK458-25 SPRING FORCE BRAKE BFK458-25	CA./APPROX.	30 KG
GELENKWELLE 687.45-0.02 UNIVERSAL JOINT SHAFT 687.45-0.02	CA./APPROX.	69 KG
GEWICHT WEIGHT GES. TOTAL	CA./APPROX.	7715 KG

TECHN. DATEN / ENGINEERING DATA	
HAUPTANTRIEB / MAIN DRIVE	HILFSANTRIEB / AUXILIARY DRIVE
P_M = 225 kW	P_M = 30 kW
i_{ist} = 82,781 GEAR RATIO	i_{ist} = 28,608 GEAR RATIO
n_1 = 1350 - 810 1/min	n_1 = 1470 1/min
n_2 = 16,31 - 9,78 1/min	n_2 = 51,38 1/min
$T_{2\,max.}$ = 219 700 Nm	n_{P2DA24} = 0,62 1/min
ÖLMENGE : 160 L OIL QUANTITY	
ÖLVISKOSITÄT : PAO synth. ÖL / PAO synth. oil OIL VISKOSITY VG 320	

KENNWORT : ILAM PASSWORD	UMGEBUNGSTEMPERATUREN: -10°C,...,+45°C AMBIENT TEMPERATURES	
KENNWORT : SHAROUD CEMENT PASSWORD	UMGEBUNGSTEMPERATUREN: -18°C,...,+40°C AMBIENT TEMPERATURES	
b KENNWORT : KAROON CEMENT PASSWORD	UMGEBUNGSTEMPERATUREN: -..°C,...,+..°C AMBIENT TEMPERATURES	
c KENNWORT : SHARGH CEMENT PASSWORD	UMGEBUNGSTEMPERATUREN: -12°C,...,+40°C AMBIENT TEMPERATURES	

EINBAULAGE / MOUNTING POSITION
M. 1:15

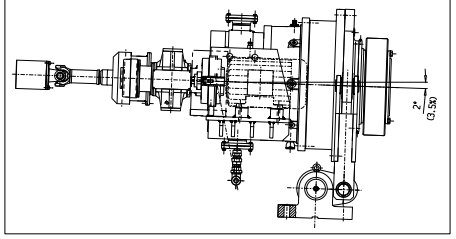

ABMESSUNGEN AM WELLENENDE DER ANZUTREIBENDEN ARBEITSMASCHINE
DIMENSIONS ON SHAFTEND OF DRIVEN MACHINE
M. 1:3.5

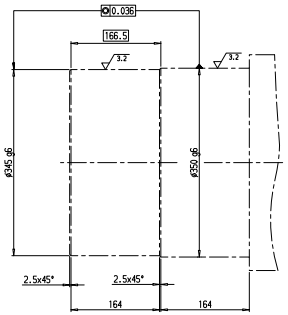

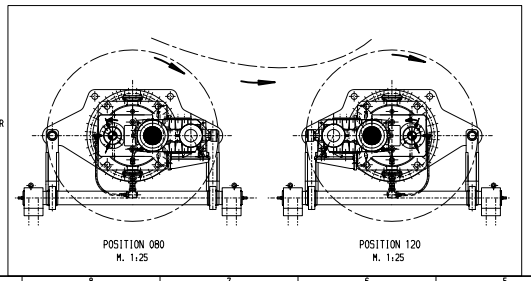

Gleichartige Pfeile kennzeichnen die Abhängigkeit der Drehrichtungen!
Arrows show relative directions of rotation

Passfedernut(en) nach DIN 6885-1, leichter Sitz und Zentrierung(en) nach DIN 332, Form DS
Parallel keyway(s) to DIN 6885-1, light seating and centering(s) to DIN 332, shape DS

Umlaufende Teile müssen vom Käufer gegen unbeabsichtigtes Berühren gesichert werden! (Gesetz über technische Arbeitsmittel)
The purchaser is responsible for the provision of safety guards.

4/428

Zeichen	Änderungsbeschreibung	Datum	Name	Norm	geprüft
d	HB/J13 Bezeichnung von Turck-Sensor und Rückschlagventil entfernt	2005-09-19	ETG	.	2005-09-19
c	E4 Kennwort SHARGH CEMENT für Auftrag 4.190.294 hinzu	2005-08-05	HDB	.	2005-08-05
b	F4/H12 Maß 250 und Kennwort hinzu	2005-07-14	ETG	.	2005-07-15
a	. Abmessungen Motorwellenende für Projekt ILAM hinzu	2005-05-18	THL	.	2005-05-18
Al	Feld				2005-03-22

Auftr.-Nr. 4168408/80

Toleranzen nach DIN ISO 8015 — Allgemeintoleranzen ±30 ±0,3 sonst nach DIN ISO 2768-mH

FLENDER

Nicht gekennzeichnete Oberflächen: Rauhwerte Ra in µm

Gez.	HD	2005-03-22	Thiele
Gepr.	HD	2005-03-22	Thiele
Norm	.	.	.
Abt.	Datum	Name	
Maßstab 1:8		Gewicht (kg)	
Trägheitsmoment J (kgm²)		.	

Benennung: MASSZCHNG P2DA 23
DIMENSION DRAWING P2DA 23
Rohteil nach Zeichnung: . sonst nach Zeichnung: .
Format A4 Zeichnungs-Nr. 5M 6 084 316 Al
Ersatz für . Aus Zchng. 6 062 643

Basis-Nr. Modell-Nr. Al Anz. Teil

Maße in mm — Schutzvermerk ISO 16016 beachten

PLOT-DATUM: 05-MAY-2006 10:30:07 H. Raschka/HDVZ

E: Alle drehmomentübertragenden Schrauben nach Arbeitsblatt W1813 angezogen

A: Mit Loctite Nr.601 gesichert

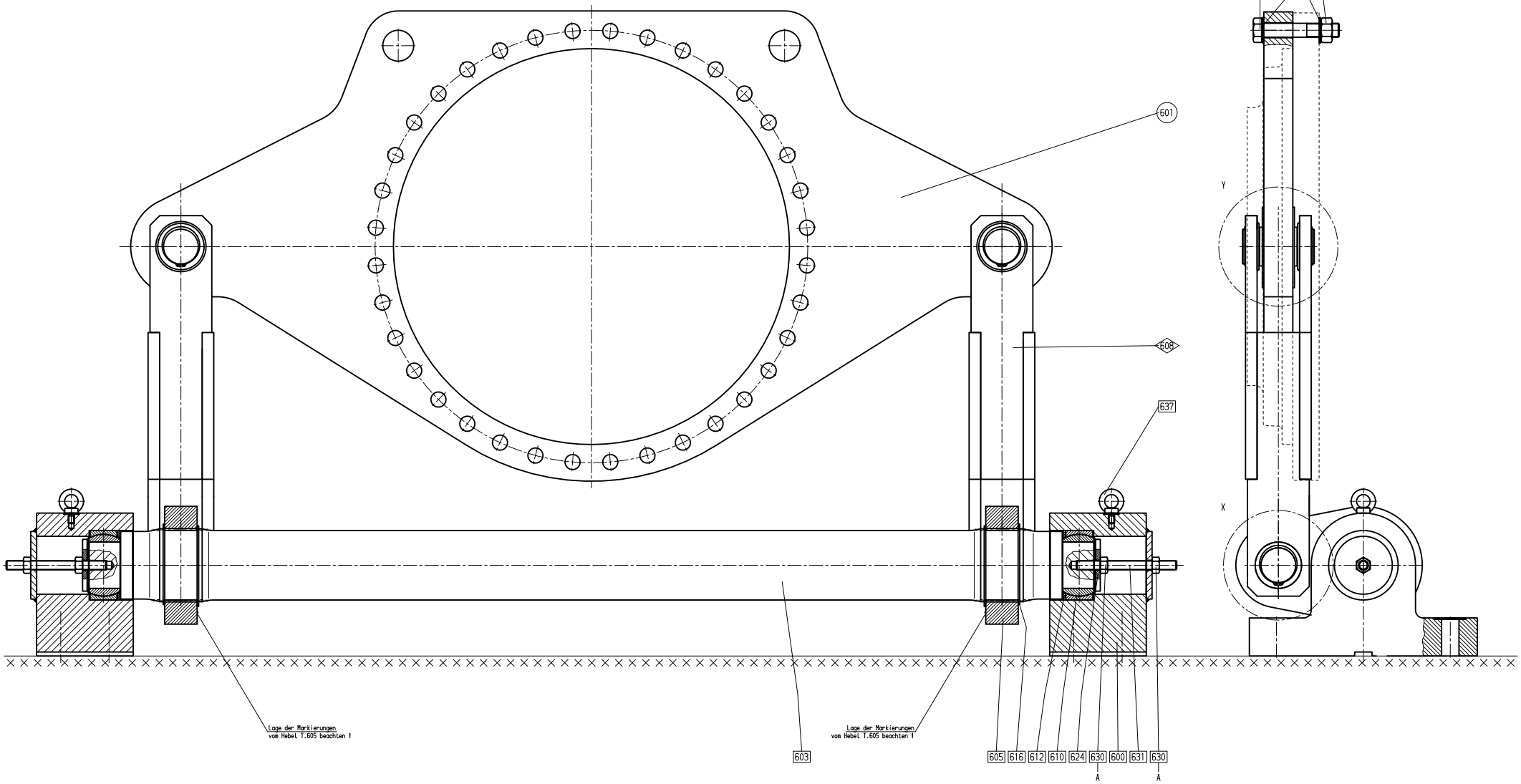

X
M 1:3

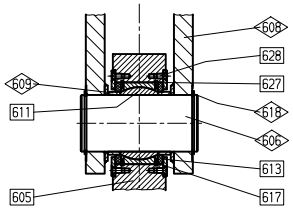

Y
M 1:3

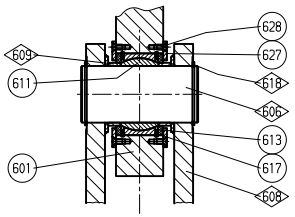

ⓐ

Gleichartig gekennzeichnete Teile werden im zusammengebautem Zustand als Montagegruppe versand.

a	AG	Kennzeichnung hinzu		2003-12-02	HDB	.	2003-12-02
Al	Feld	Änderungsbeschreibung		Datum	Name	Norm	2002-10-24
				Auftr.-Nr.	.		gesichert

Toleierung nach DIN ISO 8015

Allgemeintoleranzen ≤30 ±0,3 sonst nach DIN ISO 2768-mH

FLENDER

Nicht gekennzeichnete Oberflächen.

Rauhwerte Ra in µm

Gez.	SEO	2002-07-17	Srivathsan
Gepr.	HD	2002-10-24	Thiele
Norm	.	.	.
	Abt.	Datum	Name
Maßstab	1:3.5		Gewicht (kg)
Trägheitsmoment J (kgm²)			.

Werkstoff /-Nr. . .

Benennung Schl.-Nr.: 1414

Z-ZEICHNUNG

P25A Gr. 23/24

Rohteil nach Zeichnung . sonst nach Zeichnung .

Format Art Zeichnungs-Nr. Al 5 . 6 010 765 a

Ersatz für . Aus Zchng. 5 866 811

Basis-Nr. Modell-Nr. Al A Anz. Teil

Maße in mm

Schutzvermerk ISO 16016 beachten

PLOTT-DATUM: 05-MAY-2006 12:03:17 H. Raschle/HDVZ

5/428

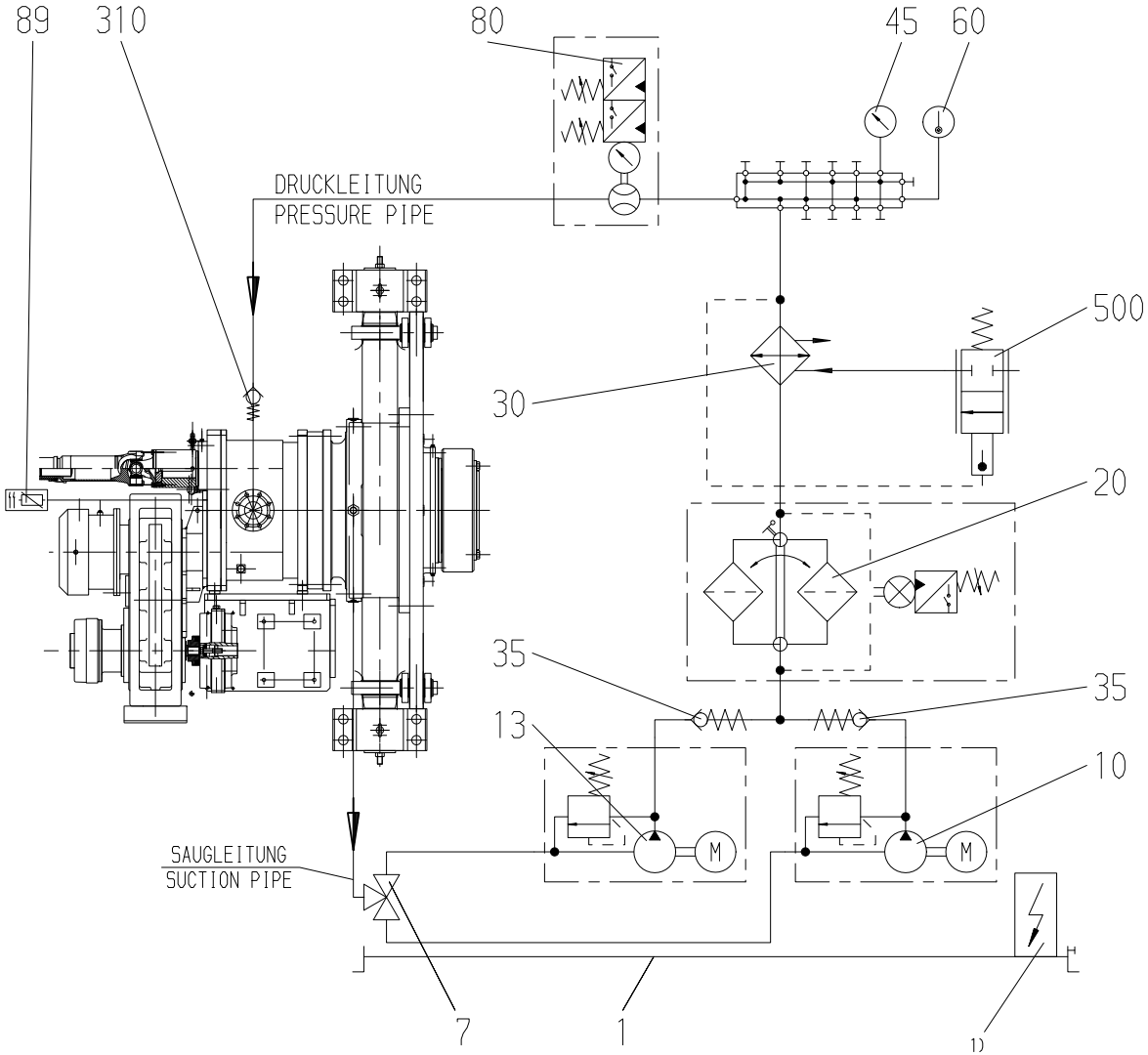

OELTEMPERATUR	SCHALTUNG	GERAET / TEIL-NR.
> +5°C	PUMPE AN NACH 30 SEK. HAUPTMOTOR AN	THERMOM-WIDST. TEIL 89
⩾ +30°C	FILTERVERSCHMUTZUNG-FREIGABE	THERMOM-WIDST. TEIL 89
> +55°C	VENTIL-KUEHLWASSER "AUF"	THERMOM-WIDST. TEIL 89
⩽ +45°C	VENTIL-KUEHLWASSER "ZU" PUMPE LÄUFT WEITER	THERMOM-WIDST. TEIL 89
> +80°C	"WARNUNG"	THERMOM-WIDST. TEIL 89
> +90°C	HAUPTMOTOR "AUS"	THERMOM-WIDST. TEIL 89

OEL TEMPERATURE	CONTROL	EQUIPMENT/PART NO.
> +5°C	PUMP ON AFTER 30 SEC. MAIN MOTOR ON	THERMOM-RESIST. TEIL 89
⩾ +30°C	FILTERCONTAMINATE RELEASED	THERMOM-RESIST. TEIL 89
> +55°C	VALVE-COOLING WATER "OPEN"	THERMOM-RESIST. TEIL 89
⩽ +45°C	VALVE-COOLING WATER "CLOSE" PUMP GOES ON	THERMOM-RESIST. TEIL 89
> +80°C	"WARNING"	THERMOM-RESIST. TEIL 89
> +90°C	MAIN MOTOR "OFF"	THERMOM-RESIST. TEIL 89

TEIL-NR.: 89 = PT100
PART-NO.: 89 = PT100

1) Klemmenkasten und Verdrahtung nur im Auftragsfall
1) TERMINAL BOX AND WIRING TO BE ORDERED SEPARATELY

UEBRIGE GERAETETEILNR. SIEHE SCHMIERSCHEMA ZEICHNG.: 6043465
OTHER EQUIPMENT PART-NO. SEE LUBRICTION DIAGRAM DRW.: 6043465

64428

2004-04-22
Auftr.-Nr. 4097705/080 gesichert

Tolerierung nach DIN ISO 8015 | Allgemeintoleranzen ⩽30 ±0,3 sonst nach DIN ISO 2768-mH

FLENDER

Werkstoff /-Nr. . .

Benennung Schl.-Nr.: 0500
SCHMIERSCHEMA
P2DA / OWGD

Nicht gekennzeichnete Oberflächen: .
Rauhwerte Ra in µm

	Gez.	HD	2004-04-22	Steinig
	Gepr.	HD	2004-04-22	Hobbold
	Norm	.	.	.
		Abt.	Datum	Name

Maßstab 1:1 | Gewicht (kg)
Trägheitsmoment J (kgm²) .

Basis-Nr. | ÄI | Ä
Modell-Nr. | Anz. | Teil

Rohteil nach Zeichnung . | sonst nach Zeichnung .

Format Art | Zeichnungs-Nr. | ÄI
8 | 6 043 978 | .
Ersatz für . | Aus Zchng. 6 044 305

Schutzvermerk ISO 16016 beachten

PLOTT-DATUM: 05-MAY-2006 12:03:21 H. Raschig/HDVZ

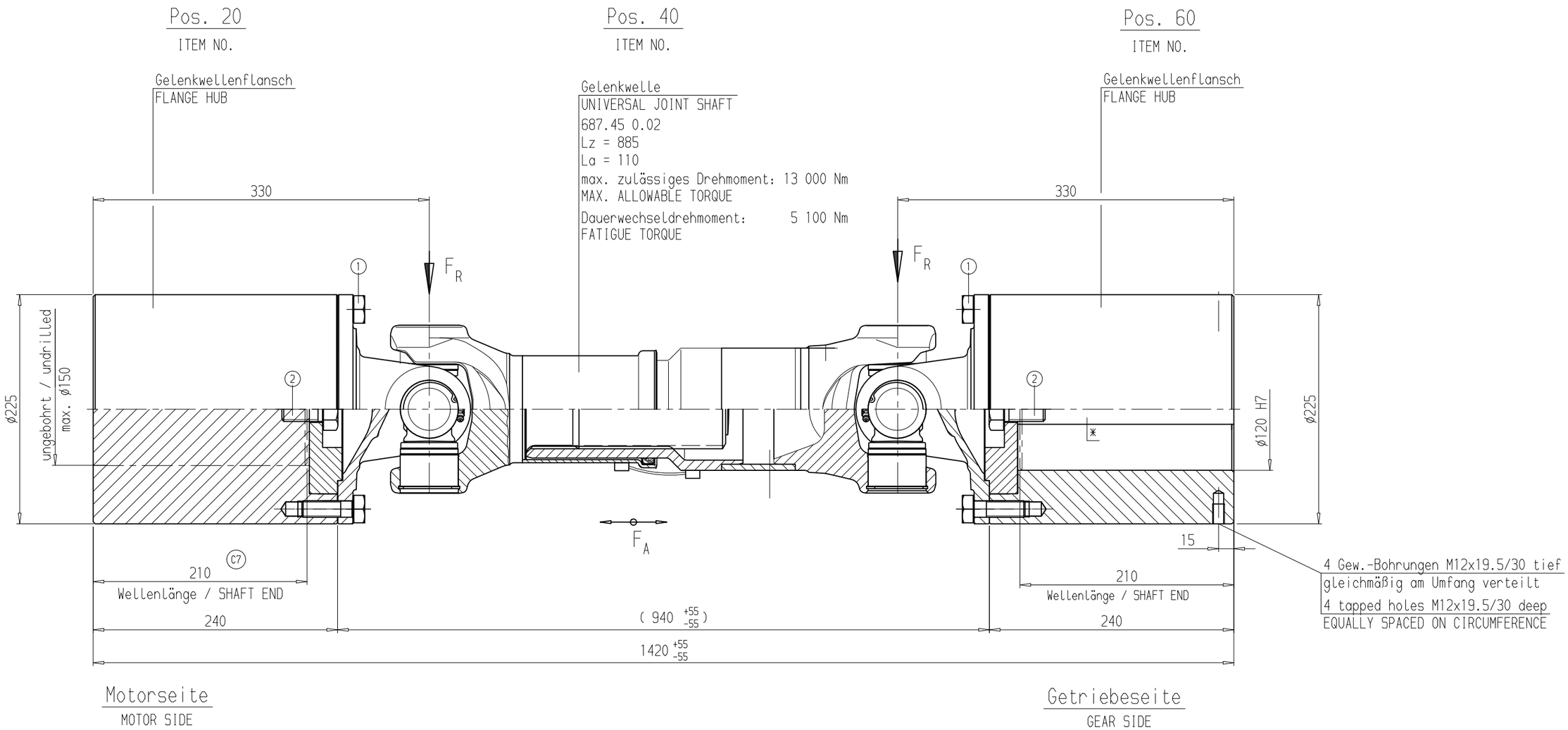

Anziehdrehmomente
TIGHTENING TORQUE

① M16 210 Nm
② M24 410 Nm ✱
③ M36 410 Nm ✱

✱ Mit Loctite 242 gesichert
✱ SECURED WITH LOCTITE 242

Umlaufende Teile müssen vom Käufer gegen unbeabsichtigtes Berühren gesichert werden!
(Gesetz über technische Arbeitsmittel)

The purchaser is responsible for the provision of safety guards.

✱ Nut nach DIN 6885/1
✱ keyway acc. to DIN 6885/1

Drehfedersteife CT :
torsional stiffness CT :

CT = 3.10 x 10^5 Nm/rad

Position / ITEM NO.	20	40	60
Gewicht / WEIGHT (kg)	60	40	55
Trägheitsmoment / MOMENT OF INERTIA (kg m²)	0.45	0.13	0.43

ÄI	Feld	Änderungsbeschreibung	Datum	Name	Norm	
a	C7	Nabenlänge hinzu	2006-02-15	KHM	KHM	2006-02-15
						2006-01-10

Zul. Abweichungen für Maße ohne Tol.-Angaben: mittel DIN 7168 | Auftr.-Nr. 4190294 | gesichert

FLENDER

Werkstoff /-Nr. .

Benennung Schl.-Nr.: 0231
KPPLG KOMBINATION

Nicht gekennzeichnete Oberflächen: .

Gez.	KUPE	2006-01-10	Tiebing
Gepr.	KUPE	2006-01-10	Tiebing
Norm	.	.	.
	Abt.	Datum	Name
Maßstab	1:3		Gewicht (kg)
Trägheitsmoment J (kgm²)	1.0		155

Rauhwerte Ra in µm

Flansch ø225 / Gelenkwelle 687.45 / Flansch ø225

Rohteil nach Zeichnung: . | sonst nach Zeichnung: .

Format Art Zeichnungs-Nr. ÄI
7 M 6 108 385 a

Basis-Nr. | ÄI | Ä Anz. | Teil
Modell-Nr.

Ersatz für . | Aus Zchng. 6 067 496

Maße in mm

Schutzvermerk ISO 16016 beachten

PLOTT-DATUM: 05-MAY-2006 13:06:27 Fr.Tiebing/PZ6

FLENDER	**Stückliste (SL)** Parts list	**Bauart** Type **Größe** Size **Übersetzung** ratio	**Seite** Page 1/1

Bei Korrespondenz bitte angeben
Please quote in correspondence **SL 4190294-020 DE/EN**

Hierzu gehört Zeichnungs-Nr.
Please refer to DWG No. **8216212**

	Teil-Nr. Part No.	Menge No. off		Benennung Description	Zeichnungs-Nr. Drawings No.	Material-Nr. Ident no.	Gw(kg) Weight
E	0100	1	ST	NABE-FLANSCH VARI FLANGE HUB		000.009.900.257	
E	0101	1	ST	RING-STUETZ 225 16MnCrS5 SUPPORTING RING 225 16MnCrS5	8215878/B	000.000.852.362	5,0
E	0102	1	ST	SCHRB-SKT M24X060 D 933 8.8 HEXAGON HEAD SCREW M24X060 D 933 8.8		000.000.321.841	0,3

Die mit * gekennzeichneten Teile gehören zu einer Baugruppe (G). Die Baugruppe ist nur komplett auszutauschen.
The parts marked with * belong to a subassembly (G). The subassemblymust be replaced complete.

A. Friedr.Flender AG, D 46393 Bocholt,
Tel.+ 49(0)2871/92-0, Fax+ 49(0)2871/922596, http://www.flender.com

Datum Date	KLEIN-HESSLING,MARION FR. 2850	
16.05.2006	Rev.:	

FLENDER	**Stückliste (SL)** Parts list	**Bauart** Type **Größe** Size **Übersetzung** ratio	**Seite** Page 1/1

Bei Korrespondenz bitte angeben
Please quote in correspondence **SL 4190294-060 DE/EN**

Hierzu gehört Zeichnungs-Nr.
Please refer to DWG No. **8216212**

	Teil-Nr. Part No.	Menge No. off		Benennung Description	Zeichnungs-Nr. Drawings No.	Material-Nr. Ident no.	Gw(kg) Weight
E	0100	1	ST	NABE-FLANSCH VARI FLANGE HUB		000.009.900.257	
E*	0101	1	ST	RING-STUETZ 225 16MnCrS5 SUPPORTING RING 225 16MnCrS5	8215878/B	000.000.852.362	5,0
E	0102	1	ST	SCHRB-SKT M24X060 D 933 8.8 HEXAGON HEAD SCREW M24X060 D 933 8.8		000.000.321.841	0,3

Die mit * gekennzeichneten Teile gehören zu einer Baugruppe (G). Die Baugruppe ist nur komplett auszutauschen.
The parts marked with * belong to a subassembly (G). The subassemblymust be replaced complete.

A. Friedr.Flender AG, D 46393 Bocholt,
Tel.+ 49(0)2871/92-0, Fax+ 49(0)2871/922596, http://www.flender.com

Datum Date	TIEBING, STEFANIE	2691
16.05.2006	Rev.:	

DANA SPICER GELENKWELLENBAU

GWB®

Einbau und Wartung

für Gelenkwellen / Industrie-Anwendungen

Installation and Maintenance

for Cardan Shafts / Industrial Applications

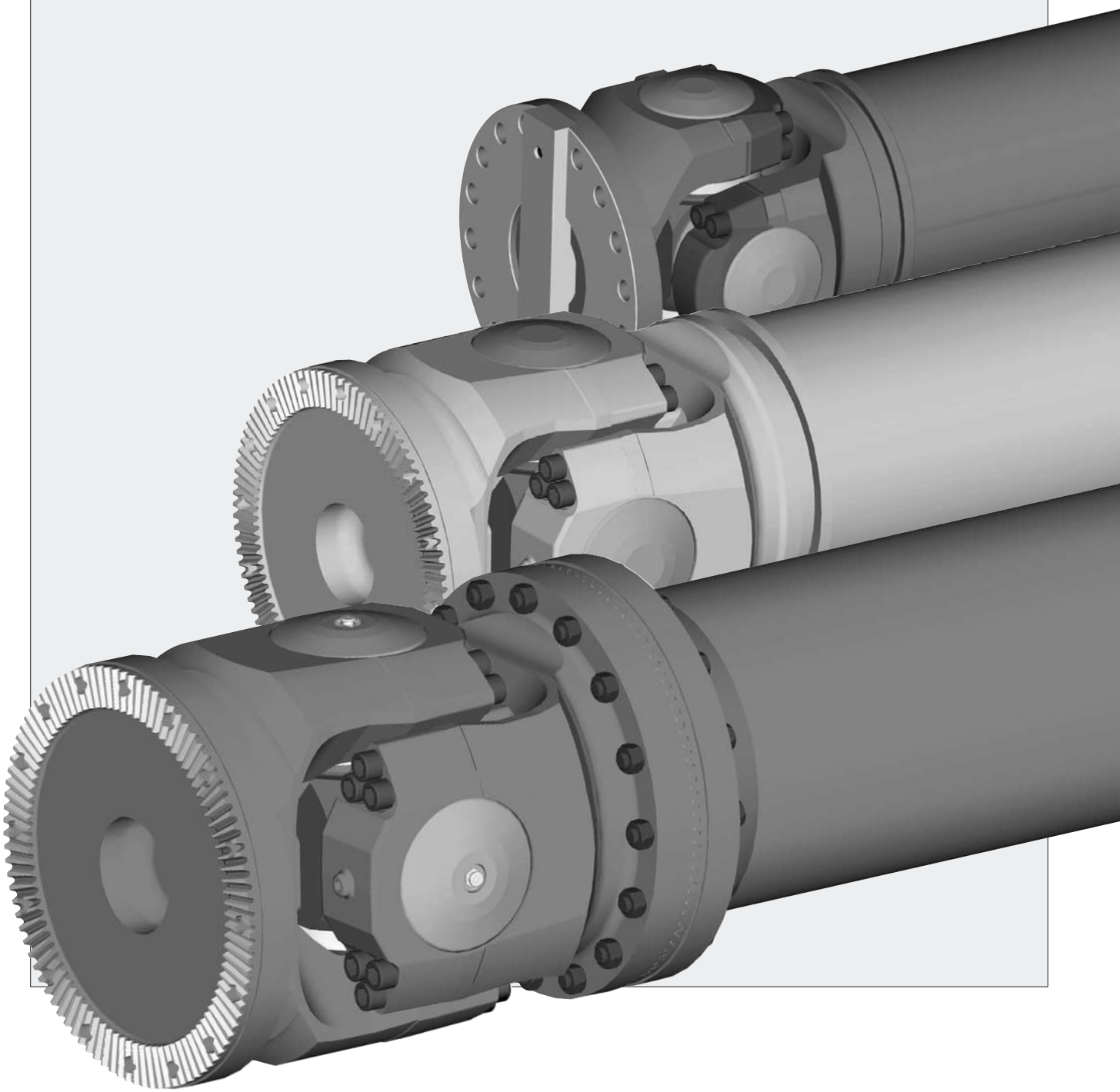

Inhalt

Table of Contents

Sicherheitshinweise	Seite 1	***Safety instructions***	*Page 1*
Transport und Lagerung	Seite 2	***Transport and storage***	*Page 2*
Einbau • Ausbau - Einbau - Ausbau - Flanschverschraubung - Anschlussflansche	Seite 3	***Installation • Disassembly*** *- Installation* *- Disassembly* *- Flange bolting* *- Companion flanges*	*Page 3*
Wartung - Wartungsfristen - Kontrollarbeiten - Abschmierung - Empfohlene Nachschmierfristen	Seite 9	***Maintenance*** *- Maintenance intervals* *- Inspection* *- Lubrication* *- Recommended re-greasing intervals*	*Page 9*
Instandsetzung	Seite 11	***Repair***	*Page 11*
Richtlinien für Anfragen und Bestellungen	Seite 12	***Directions for inquiries and orders***	*Page 12*
Kundendienst	Seite 13	***After-sales service***	*Page 13*

DANA SPICER GELENKWELLENBAU GWB®

Postanschrift/*Postal address:*
P.O. Box 10 13 62
45013 Essen/Germany

Hausanschrift/*Office address:*
2. Schnieringstr. 49
45329 Essen/Germany

Telefon: 00 49 (0) 2 01 – 81 24-0
Telefax: 00 49 (0) 2 01 – 81 24-652
E-Mail: industrial@dana.com
Internet: http://www.gwb-essen.de

Copyright by Spicer Gelenkwellenbau GmbH & Co. KG

Design: GK Marketing Service GmbH

Alle Rechte vorbehalten.
Jegliche Vervielfältigung dieser Veröffentlichung, auch auszugsweise, darf nicht ohne ausdrückliche Genehmigung des Copyright-Inhabers erfolgen.

Richtlinien betreffend Urheberrecht.
Produkthaftung und Sicherheitshinweis siehe STD 1016-005.

Mit diesem Katalog sind alle früheren Angaben ungültig.
Änderungen vorbehalten.

Gedruckt in Deutschland 70.002.00.09.2002

Copyright by Spicer Gelenkwellenbau GmbH & Co. KG

Design: GK Marketing Service GmbH

All rights reserved.
Any reproduction of this publication or parts thereof is subject to the explicit authorization of the copyright-holder.

Regulation concerning Copyright.
Productliability and Safety-Directions see STD 1016-000.

This catalogue supersedes all former editions.
We reserve the right to make alterations.

Printed in Germany 70.002.00.09.2002

Sicherheitshinweise

Unsere Produkte sind gemäß dem letzten Stand der Technik entwickelt und getestet. Die Eigenschaften der Produkte, die in unserem Informationsmaterial genannt oder von uns schriftlich fixiert worden sind, unterlagen unserer sorgfältigen Prüfung.

Anderweitige Festlegungen sind möglich, bedürfen aber unserer schriftlichen Bestätigung.

Die Kenntnis der spezifischen Anforderungsprofile an unser Produkt für einen bestimmten Anwendungsfall liegt beim Besteller, und es obliegt ihm, die Zeichnungen und Unterlagen, die von uns aufgrund von Besteller-Angaben gefertigt wurden, auf ihre Richtigkeit zu untersuchen und die Eignung zu dem vorgesehenen Einsatzzweck zu prüfen. Die Auswahl von Gelenkwellen und deren Größenfestlegung unsererseits können stets nur als Empfehlung betrachtet werden.

Zur Vermeidung von Personen- und Sachschäden sind bei Anwendung und Handhabung von Gelenkwellen unbedingt die folgenden Sicherheitshinweise zu beachten!

- Überall dort, wo eine Gefährdung von Menschen und Material durch rotierende Gelenkwellen möglich ist, sind vom Anwender und/oder Betreiber entsprechende Sicherheitsvorkehrungen zu treffen.
  EG-Maschinenrichtlinie beachten!
- Einbau-, Montage- und Wartungsarbeiten an Gelenkwellen dürfen nur von **fachkundigem Personal** durchgeführt werden.
- Die bei der Auslegung der Gelenkwellen festgelegten Betriebsdaten, wie Drehmomente, Drehzahlen, Beugungswinkel, Längen usw. dürfen nicht überschritten werden.
- Bei Veränderungen, die an der Gelenkwelle **ohne unsere schriftliche Zustimmung vorgenommen werden, entfällt jegliche Gewährleistung.**

GWB-Gelenkwellen werden als einbaufertige Aggregate geliefert. Die Gelenkwellen sind betriebsfertig abgeschmiert. Sie sind den technisch dokumentierten Unterlagen entsprechend ausgewuchtet und farbbehandelt.

⚠ Der Wuchtzustand einer Gelenkwelle darf auf keinen Fall geändert werden.

Unzulässige Unwucht kann zu unruhigem Lauf und damit zu frühzeitigem Verschleiß von Gelenk- und Anschlußlagern führen. Im Extremfall kann die Gelenkwelle aus dem Aggregat geschleudert werden.

Verletzungsgefahr!
Fangvorrichtung vorsehen!

Weitere Hinweise zur Sicherheit sind den folgenden Themen zugeordnet.

Safety instructions

Our products have been developed and tested according to the latest state-of-the-art engineering. The characteristic features of the products which are described in our information material or which we specified in writing were subjected to proper and careful inspection.

Other features are possible but they are subject to our written confirmation.

The knowledge of the various demands on our product for a particular application lies with the purchaser, and it is incumbent on him to verify the drawings and documents prepared by ourselves on the basis of the data made available by the purchaser and to examine the suitability of the product for the proposed use. The selection of shaft types and the specification of their sizes on our part shall in all cases be considered as a recommendation only.

When using and handling cardan shafts, the following safety instructions must be strictly observed to prevent damage to persons and property.

- *Where danger to people or material can be caused by rotating cardan shafts, a safety device has to be installed by the user and/or operator.*
  Observe the EC Regulations for Machinery!
- *Installation, assembly and maintenance work may only be carried out by **qualified personnel**.*
- *The operating data of the cardan shafts, such as max. torque, speed, deflection angles, lengths etc. must never be exceeded.*
- *If cardan shafts are in any way altered **without our written consent, they are no longer covered by our warranty.***

GWB cardan shafts are delivered as complete units ready for installation. The shafts are greased for operation. They are balanced and painted in accordance with the technical information sheets.

⚠ *The balance state of a cardan shaft must on no account be altered.*

An inadmissible out-of-balance of a shaft may result in uneven running and premature wear of the joints and the bearings of the units to which the cardan shaft is connected. In extreme cases the cardan shaft could break and shaft components could be thrown at speed from the vehicle or machine.

Danger of injury!
Provide a safety guard device!

Further safety instructions are incorporated in the relevant items.

Transport und Lagerung

⚠ **Um Verletzungen von Personen und Beschädigungen an der Gelenkwelle zu vermeiden, ist für einen sicheren Transport und sichere Lagerung zu sorgen.**

Folgende Hinweise sind zu beachten:

- Belastungssichere Kunstfaserseile oder Hebebänder verwenden. Bei Stahlseilen auf Kantenschutz achten.
- Transport sollte in waagerechter Lage erfolgen (s. Bild). Bei nicht waagerechtem Transport muss eine Sicherung gegen Auseinanderfallen vorgesehen werden. **Verletzungsgefahr!**

Transport and storage

⚠ ***To prevent injuries of persons and damage to the cardan shafts always make sure that the shafts are safely transported and stored.***

Please consider the following precautions:

- *Use strong nylon ropes or lifting belts. When using steel cords, protect the edges.*
- *Cardan shafts should be transported in a horizontal position (see illustration). For non-horizontal transportation additional precautions must be taken to prevent the splined parts from separating.* ***Danger of injury!***

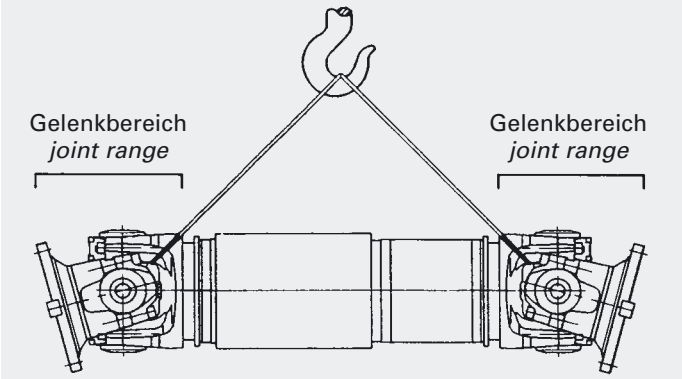

- Beim Anheben und Absetzen der Gelenkwelle können in den Gelenkbereichen die beweglichen Teile (Flanschmitnehmer und Zapfenkreuz) durch Abkippen zu Verletzungen führen. **Nicht in das Gelenk fassen! Quetschgefahr!**
- Schlag und Stoß bei Transport und Lagerung vermeiden.
- Profilschutzhülse (1) und Dichtung (2) nicht mit dem Gewicht der Gelenkwelle oder Fremdgewichten belasten.

- *When lifting or putting down the shaft, the moving parts (flange yoke and journal cross) may tilt and lead to injuries.* ***Keep hands away from the joint! Danger of crushed hands!***
- *Avoid bumps and knocks during transport and storage.*
- *Do not store or handle the shaft with any stress or load on the spline protection (1) or the seal (2).*

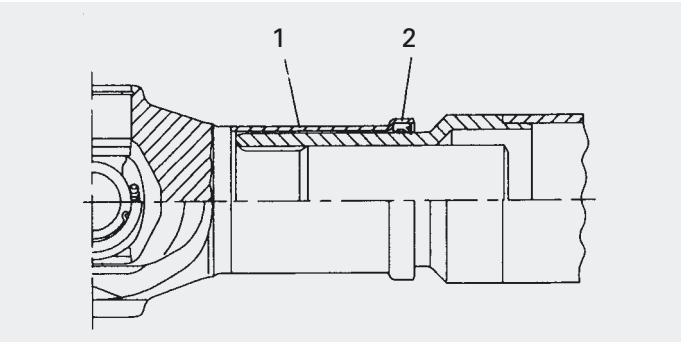

Baureihen / *Series* 587, 687, 688

- Lagerung in geeigneten Gestellen, so dass die Flanschmitnehmer nicht belastet werden.
- Sichern gegen Wegrollen, z. B. durch Holzkeile.
- Bei stehender Lagerung Gelenkwellen gegen Umstürzen sichern.
- Lagerung in trockenen Räumen.

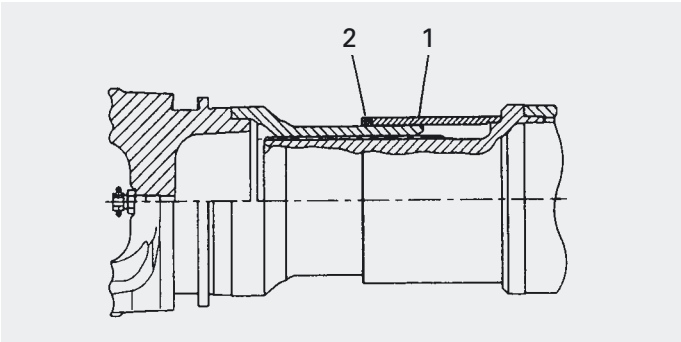

Baureihen / *Series* 390, 392, 393

- *Use appropriate frames or racks for storage, so that the flange yokes are not loaded.*
- *Use chocks or blocks to prevent cardan shaft from rolling.*
- *Secure shaft against falling over if it is stored in a vertical position.*
- *Keep cardan shafts in a dry place.*

Einbau und Ausbau von Gelenkwellen

Einbau

⚠ Um die in der Dokumentation festgelegten Eigenschaften der Gelenkwelle zu gewährleisten, darf ihr Anlieferzustand nicht verändert werden.

Überall dort, wo eine Gefährdung von Menschen und Material durch rotierende Gelenkwellen möglich ist, sind vom Betreiber entsprechende Sicherheitsvorkehrungen zu treffen.

- Geeignete Sicherheitseinrichtungen (z.B. Fangbügel, stabile Schutzgitter) müssen ein Umher- oder Herausschleudern von Gelenkwellenteilen verhindern. **Lebensgefahr!**
- Gelenkwellen sind biegeelastische Körper, die auf Biegeschwingungen bzw. biegekritische Drehzahlen berechnet werden müssen. Die max. zulässige Betriebsdrehzahl muss aus Sicherheitsgründen in genügendem Abstand unter der biegekritischen Drehzahl 1. Ordnung liegen.
- Aus Gründen der Laufruhe und der Sicherheit der Gelenkwelle darf der n x β Wert (Drehzahl x Beugewinkel) der jeweiligen Gelenkgröße nicht überschritten werden. Bitte sprechen Sie uns an.
- Stirnflächen und Zentrierungen der Gelenkwellenflansche und Gegenflansche von Rostschutzmitteln, Schmutz, Fett und Farbe befreien, da sonst eine betriebssichere Verbindung nicht gewährleistet ist.
- Vorsicht beim Umgang mit der Gelenkwelle. Solange Flanschmitnehmer noch frei beweglich sind, besteht **Verletzungsgefahr!**
- Prüfen der Gabelstellung (1) der Gelenkwelle. Pfeilmarkierungen (2) beachten (sie müssen gegenüberliegen!). Profilteile sind verpasst und dürfen nicht vertauscht oder verdreht werden.

Installation/dismantling

Installation

⚠ *In order to guarantee the properties of the cardan shaft as described in the information brochure they must not be altered from its as-delivered state.*

Whenever people or material might be endangered by rotating cardan shafts, the user must take for the relevant safety precautions.

- *Suitable safety devices (e.g. catch bows, solid safety guards) must be provided to prevent the parts of the shaft from being thrown around.* ***Danger to life!***
- *Cardan shafts are elastic and flexural bodies. Their flexural vibration and their critical bending speed must be calculated. The maximum permissible operating speed must be sufficiently below the critical bending speed of the first order.*
- *For the smooth running and safety of the shaft the n x β value (speed x deflection angle) of the relevant shaft size must not be exceeded. Please contact us.*
- *The faces and the centering diameter of the shaft flanges and companion flanges must be free of dust, grease or paint to guarantee a safe connection.*
- *Be careful when handling the cardan shaft. Freely moving flange yokes may cause* ***INJURIES!***
- *Check position of yokes (1) of the shaft. Observe the arrow markings (2). They must be in alignment. The splines are fitted to one another and must not be exchanged or distorted.*

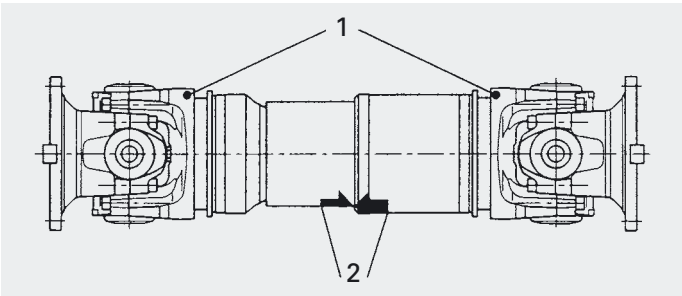

- Eventuell vorhandene Transportsicherung gegen Auseinanderziehen der Gelenkwelle vor Einbau entfernen. Im Zweifelsfall beim Lieferwerk rückfragen.
- Montierte Flansche der Anschlussaggregate auf Rund- und Planlaufabweichung sowie Zentrierpassung kontrollieren (siehe Kapitel Anschlussflansche).
- Gelenkwelle nicht mit Montagehebeln im Gelenk drehen, da die Lagerabdichtungen beschädigt werden und Schmiernippel oder Überdruckventile abbrechen können.
- Schrauben und Muttern mit der vorgeschriebenen Qualität (Festigkeit) verwenden (siehe Flanschverschraubungen).

- *Before installation remove the transport retainer device, if present. In case of doubt please contact the supplier.*
- *Check the axial and radial run-out as well as the spigot fit of the mounted flanges and the connected units (see companion flanges).*
- *Do not turn the joints of the cardan shafts with assembly levers because this may damage the grease nipples or relief valves.*
- *Use nuts and bolts of the prescribed quality (strength) (see flange boltings).*

Einbau und Wartung

- Schrauben und Muttern nur nach Liefervorschrift des Herstellers verwenden.
- Flanschverschraubung mit Drehmomentschlüssel überkreuz gleichmäßig anziehen (siehe Flanschverschraubungen).
- Bei Gelenkwellen **ohne Längsverschiebung** muss ein Anschlusselement **beweglich** ausgeführt sein, um die Gelenkwelle über den Zentrieransatz schieben zu können. Längenänderungen, wie sie z.B. durch Wärmeausdehnung entstehen, müssen durch entsprechende Anschlusslager Berücksichtigung finden.
- Bei Gelenkwellen **mit Längsverschiebung** müssen die Anschlussflansche **fest** auf den Wellen der angeschlossenen Aggregate sitzen.
- Gelenkwellen, die länger als 6 Monate auf Lager gelegen haben, sind vor Inbetriebnahme abzuschmieren (siehe Abschmierung).
- Beim Lackieren der Welle darauf achten, dass der Bereich, in dem die Abdichtung gleitet (Längenausgleich L_a), abgedeckt ist.

- *Only use nuts and bolts in accordance with the supplier's specification.*
- *The bolts should be evenly tightened crosswise with a torque wrench (see flange boltings).*
- *When using cardan shafts* **without length compensation***, one of the connecting units must be* **flexible** *in order to be fitted over the flange pilot. Variations in length which may be caused by temperature changes must be allowed for by a suitable connecting bearing.*
- *If cardan shafts* **with length compensation** *are used, the companion flanges must be firmly* **fitted** *on the shafts of the connected units.*
- *Cardan shafts that have been stored for more than 6 months must be re-lubricated before use (see Maintenance).*
- *For spray-painting the cardan shaft, make sure that the sliding range of the seal (length compensation L_a) is covered.*

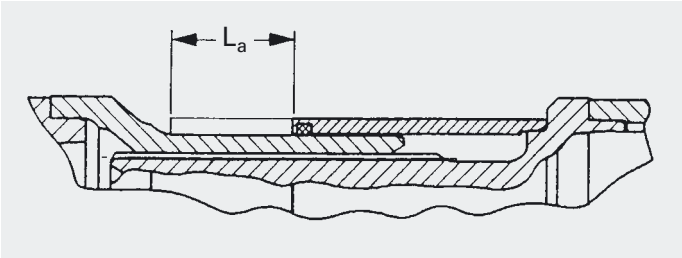

- Für die Farbbehandlung empfehlen wir unsere Lackierstandards (Bitte anfordern).
- Kunststoffbeschichtete Profile (Nabenhülse, Nabenmitnehmer) müssen vor
  – Hitze
  – Lösungsmitteln
  – mechanischen Beschädigungen
  geschützt werden.
- Bei der Reinigung von Gelenkwellen keine aggressiven chemischen Reinigungsmittel verwenden. Bei Reinigung mit Hochdruckreinigern den Druckstrahl nicht direkt auf die Dichtung richten! Dichtungen können beschädigt werden, Schmutz und Wasser können eindringen.
- Gelenkwellen sind für einen Betriebstemperaturbereich von –25°C bis +80°C geeignet (kurzzeitig und nicht häufig bis +120°C). Beim Einsatz von Gelenkwellen in hiervon abweichenden Temperaturbereichen ist in jedem Fall mit uns Kontakt aufzunehmen.

- *For spray-painting the shaft we recommend our paint standards (Please ask for them).*
- *Protect rilsan-coated splines (sleeve muff or sleeve yoke) against*
  – heat
  – solvents
  – mechanical damage.
- *When cleaning cardan shafts, do not use aggressive chemical detergents or pressurized water or steam jets because the seals may be damaged and dirt or water may penetrate.*
- *Cardan shafts can be used in a temperature range between –25°C (–13°F) and +80°C (+176°F), up to +120°C (+248°F) but only for limited periods and not on a frequent basis. Please contact us if the operating temperature deviates from these values.*

Ausbau

- Gelenkwelle vor dem Ausbau gegen Auseinandergleiten der Verschiebung sichern.
- Gelenkwelle vor dem Abziehen vom Anschlussflansch gegen Herunterfallen durch Hochbinden sichern. Beim Abziehen kann der Flanschmitnehmer abkippen. **Verletzungsgefahr!**
- Hinweise für Transport, Lagerung und Einbau beachten.

Disassembly

- *Before disassembly protect the cardan shaft from spline separation.*
- *Secure the cardan shaft against falling down before pulling it off the companion flange. The flange yoke may tilt.* ***Danger of injury!***
- *Observe the directions for transport, storage and installation of cardan shafts.*

Flanschverschraubung

Die Flanschverschraubung kann von uns bezogen werden. Die in den folgenden Tabellen angegebenen Schraubenlängen sind nur dann geeignet, wenn das Maß 2 x G entsprechend der doppelten Flanschplattenstärke G (siehe Maßblätter) nicht überschritten wird. Bei Verwendung von längeren Schrauben muss die gelenkseitige Einführbarkeit der Schrauben geprüft werden.

Wir empfehlen die Verschraubung bestehend aus:

Sechskantschraube mit Kurzgewinde ähnlich DIN 931/10.9 (Schaftlänge größer als Flanschplattenstärke)
Selbstsichernde Mutter, ähnlich DIN 980/934-10.

Die Schrauben lassen sich einbauen
a) teilweise von der Gelenkwelle aus, dabei bietet die Hinterdrehung c am Gelenkwellenflansch keine Anlage gegen Verdrehung;
b) von dem Gegenflansch aus, dazu empfehlen wir die Hinterdrehung c_1 als Schraubenkopf-Anlage und Sicherung auszubilden.

Schraubeneinführbarkeit siehe Tabellen.

Die Schraubverbindung muss mit dem vorgeschriebenen Drehmoment angezogen werden. Die in der Tabelle aufgeführten Anzugsmomente T_a beruhen auf einer 90% (bei hirthverzahnten Verbindungen 80%) Ausnutzung der Streckgrenze und gelten für leicht geölten Zustand der Verschraubung.

Zum Anziehen der Verschraubung dürfen keine MoS_2-Zusätze an Schrauben und Muttern verwendet werden. Bei Verwendung von Schrauben und Muttern mit Korrosionsschutzschichten (z.B. Dacromet 500) bitte Rücksprache halten.

Max. zulässige Streuung nach DIN 25202 Klasse B.

Flange bolting

The flange bolting set can be supplied by GWB on request.
The bolt lengths given in the tables are only suitable if the dimension 2 x G corresponding to the double the flange thickness G is not exceeded (see data sheets). If longer bolts are used, check whether the bolts can still be inserted from the joint side.

We recommended a bolting set consisting of:

***Hexagon bolt** with short thread similar to DIN 931/10.9 (shaft length greater than flange thickness)*
***Self-locking nut**, similar to DIN 980/934-10.*

The bolts allow fitting
a) *partially from the joint side, i.e. the recessed diameter c does not prevent the bolt from turning;*
b) *from the companion flange side. We recommend designing the recessed diameter c_1 so as locate the bolt head.*

See tables for insertion of bolts.

All bolts must be tightened with the specified torque. The tightening torques T_a given in the table are based on a 90% (80% Hirth-serration) utilization of the elastic limit and apply to slightly oiled bolts.

Do not use molycote paste or any other grease on the bolts and nuts. In case of corrosion protected bolts and nuts (e.g. Dacromet 500), please contact us.

Max. permissible tolerance of DIN 25202 class B.

Baureihe/*Series* 587/687/688

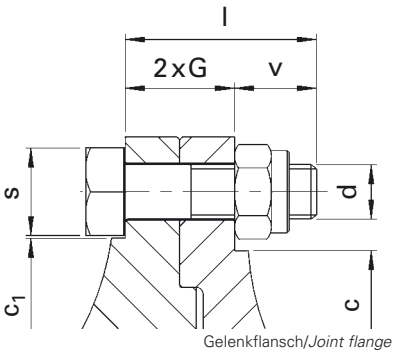

Sechskantschraube:
Kurzausführung ähnlich DIN 931/10.9
Sechskantmutter:
ähnlich DIN 980/10
Selbstsichernd

Hexagon bolt:
short model similar to DIN 931/10.9
Hexagon nut:
similar to DIN 980/10
Self-locking

Gelenkgröße/*Shaft size*		587.50		587.55		587.60
Flansch-∅/*Flange dia.* A	mm	225	250	250	285	285
Ta	Nm	295	405	405	580	580
c	mm	158	176	168	202	202
c_1	mm	171	189	189	214	214
d	–	M 16	M 18	M 18	M 20	M 20
l	mm	50	60	60	64	64
v	mm	20	24	24	24	24
s	mm	24	27	27	30	30
i[1])	–	8	8	8	8	8
Schrauben gelenkseitig einführbar *Bolts inserted from joint side*		ja *yes*	ja *yes*	ja *yes*	ja *yes*	ja *yes*

1) = Zahl der Flanschbohrungen
Ta = Anzugsmoment der Verschraubung
Spezial-Drehmomentschlüssel auf Wunsch lieferbar

1) = *Number of bolt holes*
Ta = *Tightening torque of bolting*
Special torque wrenches supplied on request

Gelenkgröße/*Shaft size*		687/688.15	687/688.20	687/688.25	687/688.30		687/688.35		687/688.40		687/688.45		687/688.55		687/688.65	
Flansch-∅ / *Flange dia.* A	mm	100	120	120	120	150	150	180	150	180	180	225	180	225	180	225
Ta	Nm	35	69	69	69	120	120	190	120	190	190	295	295	295	295	295
c	mm	64	76	76	76	100	100	119	100	119	119	158	118	158	118	158
c_1	mm	69,5	84	84	84	110,3	110,3	132,5	110,3	132,5	132,5	171	130,5	171	130,5	171
d	–	M 8	M 10	M 10	M 10	M 12	M 12	M 14	M 12	M 14	M 14	M 16	M 16	M 16	M 16	M 16
l	mm	23	27	27	27	33	33	40	33	40	40	50	50	50	50	50
v	mm	9	11	11	11	13	13	16	13	16	16	20	22	20	20	20
s	mm	13	17	17	17	19	19	22	19	22	22	24	24	24	24	24
i[1])	–	6	8	8	8	8	8	8	8	8	8	8	10	8	10	8
Schrauben gelenkseitig einführbar	Normal Ausführung *Normal design*	ja *yes*	ja *yes*	ja *yes*	ja *yes*	ja *yes*	ja *yes*	ja *yes*	ja *yes*	ja *yes*	ja *yes*	ja *yes*	ja *yes*	ja *yes*	nein *no*	ja *yes*
Bolts inserted from joint side	Weitwinkel Ausführung *Wide angle design*	–	–	–	–	–	–	–	ja *yes*	ja *yes*	ja *yes*	–	ja *yes*	–	–	–

Baureihe/*Series* 390

Normalverschraubung/*Standard bolting*

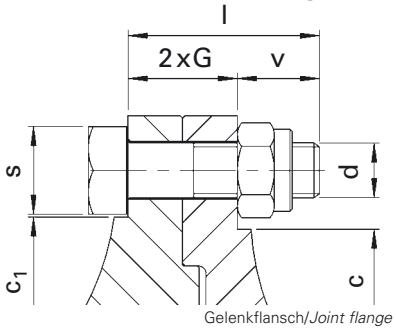

Sechskantschraube: Kurzausführung ähnlich DIN 931/10.9
Sechskantmutter: ähnlich DIN 980/10 Selbstsichernd

Hexagon bolt: *short model similar to DIN 931/10.9*
Hexagon nut: *similar to DIN 980/10 Self-locking*

Gelenkgröße/*Shaft size*		**390.60**	**390.65**	**390.70**	**390.75**	**390.80**
Flansch-∅/*Flange dia.* A	mm	285	315	350	390	435
Ta	Nm	580	780	780	1000	1500
c	mm	202	230	256	295	332
c_1	mm	214	247	277	308	343
d	–	M 20	M 22	M 22	M 24	M 27
l	mm	64	70	75	85	95
v	mm	24	26	25	29	31
s	mm	30	32	32	36	41
i[1])	–	8	8	10	10	10
Schrauben gelenkseitig einführbar *Bolts inserted from joint side*		ja *yes*	ja *yes*	ja *yes*	ja *yes*	ja *yes*

1) = Zahl der Flanschbohrungen
Ta = Anzugsmoment der Verschraubung
Spezial-Drehmomentschlüssel auf Wunsch lieferbar

1) = *Number of bolt holes*
Ta = *Tightening torque of bolting*
Special torque wrenches supplied on request

Baureihe/*Series* 587/390

Spannhülsenverschraubung *Dowel pin connection*

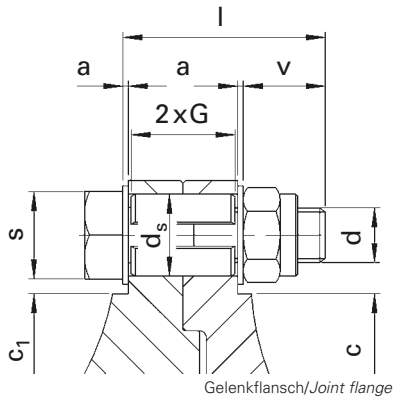

Sechskantschraube: Kurzausführung ähnlich DIN 931/8.8
Sechskantmutter: ähnlich DIN 980/10 Selbstsichernd
Spannhülse: DIN 1481
Scheibe: DIN 7349

Hexagon bolt: *short model similar to DIN 931/8.8*
Hexagon nut: *similar to DIN 980/10 Self-locking*
Dowel pin: *DIN 1481*
Washer: *DIN 7349*

Gelenkgröße/*Shaft size*		**587.50**	**587.55**	**390.60**	**390.65**	**390.70**	**390.75**	**390.80**
Flansch-∅/*Flange dia.* A	mm	250	250	285	315	350	390	435
Ta	Nm	130	130	200	200	280	280	400
c	mm	176	168	202	230	256	295	332
c_1[2])	mm	176	176	198	228	254	294	332
d	–	M 14	M 14	M 16	M 16	M 18	M 18	M 20
l	mm	65	65	75	75	90	95	110
d_s	mm	25	25	28	30	32	32	35
l_s	mm	32	32	36	40	45	50	60
v	mm	17	17	23	19	24	23	30
a	mm	6	6	6	6	8	8	8
s	mm	22	22	24	24	27	27	30
i[1])	–	4	4	4	4	4	4	4
Schrauben gelenkseitig einführbar *Bolts inserted from joint side*		ja *yes*	ja *yes*	ja *yes*	ja *yes*	ja *yes*	ja *yes*	ja *yes*

1) = Zahl der Flanschbohrungen
2) = Spannhülsenverschraubung ohne Verdrehsicherung
Ta = Anzugsmoment der Verschraubung
Spezial-Drehmomentschlüssel auf Wunsch lieferbar

1) = *Number of bolt holes*
2) = *Dowel pin connection without locking*
Ta = *Tightening torque of bolting*
Special torque wrenches supplied on request

Baureihe/*Series* 587/190

Superkurz/*Super short designs*

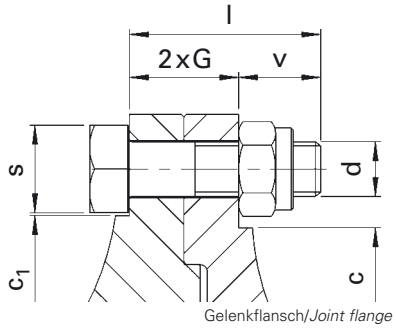

Sechskantschraube: Kurzausführung ähnlich DIN 931/10.9
Sechskantmutter: ähnlich DIN 980/10 Selbstsichernd

Hexagon bolt: *short model similar to DIN 931/10.9*
Hexagon nut: *similar to DIN 980/10 Self-locking*

Gelenkgröße/*Shaft size*		**587.50**	**190.55**	**190.60**	**190.65**	**190.70**
Flansch-∅/*Flange dia.* A	mm	275	305	348	360	405
Ta	Nm	190	295	405	405	580
c	mm	213,5	237,5	274	288	324,5
c_1	mm	225	250	285	299	338
d	–	M 14	M 16	M 18	M 18	M 20
l	mm	50	50	60	60	65
v	mm	15	20	24	24	21
s	mm	22	24	27	27	30
i[1])	–	10	10	10	10	10
Schrauben gelenkseitig einführbar *Bolts inserted from joint side*		ja *yes*	ja *yes*	ja *yes*	ja *yes*	ja *yes*

1) = Zahl der Flanschbohrungen
Ta = Anzugsmoment der Verschraubung
Spezial-Drehmomentschlüssel auf Wunsch lieferbar

1) = *Number of bolt holes*
Ta = *Tightening torque of bolting*
Special torque wrenches supplied on request

Baureihe/*Series* 392/393

Flanschanschluss mit Querkeil/*Flange connection with face key*

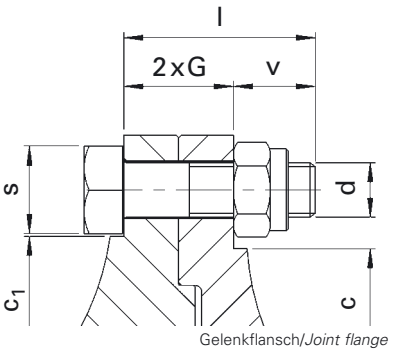

Sechskantschraube:
Kurzausführung ähnlich DIN 931/10.9
Sechskantmutter:
ähnlich DIN 980/10
Selbstsichernd

Hexagon bolt:
short model similar to DIN 931/10.9
Hexagon nut:
similar to DIN 980/10
Self-locking

Gelenkgröße/*Shaft size*		392.50	392.55	392.60	392.65	392.70	393.75	393.80	393.85	393.90
Flansch-∅/*Flange dia.* A	mm	225	250	285	315	350	390	435	480	550
Ta	Nm	295	405	580	780	780	1000	1500	2000	2000
c	mm	152	170	193	224	254	288	320	350	420
c_1	mm	171	190	214	247	277	307	342	377	444
d	–	M 16	M 18	M 20	M 22	M 22	M 24	M 27	M 30	M 30
l	mm	60	75	80	90	100	110	120	130	140
v	mm	20	25	26	26	30	30	36	36	40
s	mm	24	27	30	32	32	36	41	46	46
i[1])	–	8	8	8	10	10	10	16	16	16
Schrauben gelenkseitig einführbar *Bolts inserted from joint side*		nein *no*	nein *no*	nein *no*	nein *no*	nein *no*	nein *no*	nein *no*	nein *no*	nein *no*

1) = Zahl der Flanschbohrungen
Ta = Anzugsmoment der Verschraubung
Spezial-Drehmomentschlüssel
auf Wunsch lieferbar

1) = *Number of bolt holes*
Ta = *Tightening torque of bolting*
Special torque wrenches supplied
on request

Baureihe/*Series* 492/498

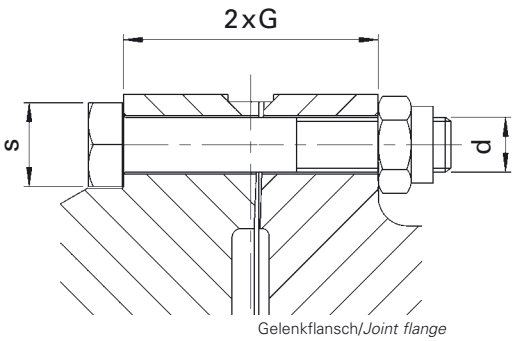

Sechskantschraube:
Kurzausführung ähnlich DIN 931/10.9
Sechskantmutter:
ähnlich DIN 980/934-10
Selbstsichernd

Hexagon bolt:
short model similar to DIN 931/10.9
Hexagon nut:
similar to DIN 980/934-10
Self-locking

Baureihe/*Series* 492

Gelenkgröße/*Shaft size*		492.75	492.80	492.85	492.90
Flansch-∅/*Flange dia.* A	mm	390	435	480	550
Ta	Nm	375	375	525	720
d	–	M 18	M 18	M 20	M 22
s	mm	27	27	30	32
i[1])	–	12	16	16	16
Schrauben gelenkseitig einführbar *Bolts inserted from joint side*		nein *no*	nein *no*	nein *no*	nein *no*

1) = Zahl der Flanschbohrungen
Ta = Anzugsmoment der Verschraubung
Spezial-Drehmomentschlüssel
auf Wunsch lieferbar

1) = *Number of bolt holes*
Ta = *Tightening torque of bolting*
Special torque wrenches supplied
on request

Baureihe/*Series* 498

Gelenkgröße/*Shaft size*		498.00	498.05	498.10	498.15	498.20	498.25	498.30	498.35	498.40	498.45	498.50	498.55	498.60
Flansch-∅/*Flange dia.* A	mm	600	650	700	750	800	850	900	950	1000	1050	1100	1150	1200
Ta	Nm	900	900	900	1800	1800	3150	3150	3150	5400	5400	5400	8200	8200
d	–	M 24	M 24	M 24	M 30	M 30	M 36	M 36	M 36	M 42 x 3	M 42 x 3	M 42 x 3	M 48 x 3	M 48 x 3
s	mm	36	36	36	46	46	55	55	55	65	65	65	75	75
i[1])	–	20	20	24	24	24	24	24	24	20	20	20	20	20
Schrauben gelenkseitig einführbar *Bolts inserted from joint side*		nein *no*	nein *no*	nein *no*	nein *no*	nein *no*	nein *no*	nein *no*	nein *no*	nein *no*	nein *no*	nein *no*	nein *no*	nein *no*

Anschlussflansche

Gelenkwellen werden in der Regel über Anschlussflansche mit den Anschlussaggregaten verbunden. Der Werkstoff der Anschlussflansche muß eine Mindestfestigkeit von 750 N/mm² aufweisen.

Für einen einwandfreien Lauf der Gelenkwellen ist die Einhaltung bestimmter Toleranzen für Planlauf und Rundlauf erforderlich (siehe Tabellen).

Die Abmessungen der Anschlussflansche entsprechen bis auf die Zentriertiefe F_A, der Passung C_A und die für einige Größen vorgesehene Quernuttiefe t_A und Quernutbreite b_A denen der entsprechenden Gelenkwellen. Sie sind den nachstehenden Tabellen zu entnehmen.

Zur besseren Schraubensicherung kann die Hinterdrehung am Anschlussflansch als Schraubenkopf-Anlage ausgebildet und die Schraube vom Anschlussflansch aus eingeführt werden. Dabei ist der Abstand Z_{min} des Flansches vom Gehäuse einzuhalten.

Ist aus Platzgründen usw. diese Lösung nicht durchführbar, empfehlen wir die Verwendung von Stiftschrauben.

Companion flanges

In general, cardan shafts are connected to the driven units by companion flanges. The companion flange material must have a tensile strength of 750 N/mm².

The accurate running of a cardan shaft requires certain tolerances for the axial and radial run-out (see tables).

The dimensions of the companion flanges correspond with those of the same size of cardan shafts, except for the centring depth F_A and the fit C_A, the depth of the keyway t_A and the width b_A. They can be taken from the following tables.

For better bolt locking we recommend designing the relief of the companion flange as a bolt head surface and inserting the bolt from the companion flange side. In this case the distance Z_{min} must be met between the flange and the adjacent housing.

If it is not possible to insert the bolts from the companion flange side, we recommend the use of stud bolts.

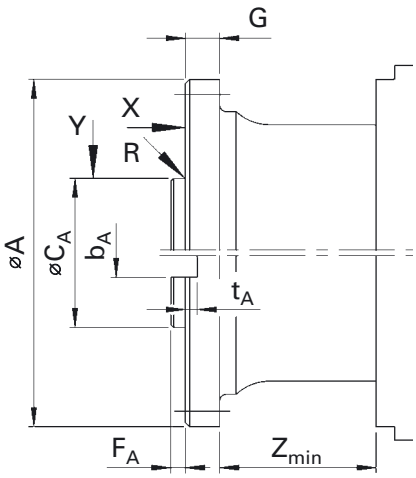

X = Planlaufabweichung
Y = Rundlaufabweichung
Z_{min} = Schraubenlänge (incl. Schraubenkopf)

X = *Axial run-out*
Y = *Radial run-out*
Z_{min} = *bolt length (incl. bolt head)*

Baureihe/*Series* 587

Gelenkgröße/*Shaft size*		587.50		587.55		587.60
A	mm	225	250	250	285	285
F_A	mm	$4_{-0,2}$	$5_{-0,2}$	$5_{-0,2}$	$6_{-0,5}$	$6_{-0,5}$
G	mm	15	18	18	20	20
X und/*and* Y	mm	0,05	0,06	0,06	0,06	0,06
C_A *h6*	mm	140	140	140	175	175

Baureihe/*Series* 687/688

Gelenkgröße/*Shaft size*		687/688.15	687/688.20	687/688.25	687/688.30		687/688.35		687/688.40		687/688.45		687/688.55		687/688.65	
A	mm	100	120	120	120	150	150	180	150	180	180	225	180	225	180	225
F_A	mm	$2,3_{-0,2}$	$2,3_{-0,2}$	$2,3_{-0,2}$	$2,3_{-0,2}$	$2,3_{-0,2}$	$2,3_{-0,2}$	$2,3_{-0,2}$	$2,3_{-0,2}$	$2,3_{-0,2}$	$2,3_{-0,2}$	$4_{-0,2}$	$2,3_{-0,2}$	$4_{-0,2}$	$2,3_{-0,2}$	$4_{-0,2}$
G	mm	7	8	8	8	10	10	12	10	12	12	15	14	15	15	15
X und/*and* Y	mm	0,05	0,05	0,05	0,05	0,05	0,05	0,05	0,05	0,05	0,05	0,05	0,05	0,05	0,05	0,05
C_A *h6*	mm	57	75	75	75	90	90	110	90	110	110	140	110	140	110	140

Baureihe/*Series* 390

Gelenkgröße/*Shaft size*		390.60	390.65	390.70	390.75	390.80
A	mm	285	315	350	390	435
F_A	mm	$6_{-0,5}$	$6_{-0,5}$	$7_{-0,5}$	$7_{-0,5}$	$9_{-0,5}$
G	mm	20	22	25	28	32
X und/*and* Y	mm	0,06	0,06	0,06	0,06	0,06
C_A *h6*	mm	175	175	220	250	280

Baureihe/*Series* 587/190
Superkurz/*Super short designs*

Gelenkgröße/*Shaft size*		587.50	190.55	190.60	190.65	190.70
A	mm	275	305	348	360	405
F_A	mm	$4_{-0,2}$	$5_{-0,3}$	$6_{-0,5}$	$6_{-0,5}$	$7_{-0,5}$
G	mm	15	15	18	18	22
X und/*and* Y	mm	0,06	0,06	0,06	0,06	0,06
C_A *h6*	mm	140	140	175	175	220

Baureihe/*Series* 392/393

Gelenkgröße/*Shaft size*		392.50	392.55	392.60	392.65	392.70	393.75	393.80	393.85	393.90
A	mm	225	250	285	315	350	390	435	480	550
F_A	mm	$4,5_{-0,5}$	$5_{-0,5}$	$6_{-0,5}$	$7_{-0,5}$	$7_{-0,5}$	$7_{-0,5}$	$9_{-0,5}$	$11_{-0,5}$	$11_{-0,5}$
G	mm	20	25	27	32	35	40	42	47	50
X und/*and* Y	mm	0,06	0,06	0,06	0,06	0,06	0,06	0,06	0,06	0,06
C_A *f8*	mm	105	105	125	130	155	170	190	205	250
b_A *K8*	mm	32	40	40	40	50	70	80	90	100
t_A *+0,2 mm*	mm	9	12,5	15	15	16	18	20	22,5	22,5

Wartung

Wartungsfristen

Der Einsatz von Gelenkwellen in industriellen Anlagen ist vielseitig, wobei sehr unterschiedliche Betriebsbedingungen zu berücksichtigen sind.

Wir empfehlen, Kontrollarbeiten in regelmäßigen Zeit- oder Leistungsabständen durchzuführen und wenn möglich mit Arbeiten an anderen Maschinenteilen zu koordinieren, mindestens jedoch einmal im Jahr.

Kontrollarbeiten

- Flansch-Verschraubung auf festen Sitz prüfen und mit vorgeschriebenem Anzugsmoment nachziehen (siehe Flanschverschraubungen).
- Spielprüfung. Durch Anheben der Gelenke und der Längsverschiebung prüfen, ob es in diesen Bereichen sichtbares oder fühlbares Spiel vorhanden ist.

Darüber hinaus muss bei jeglichem Auftreten von außergewöhnlichen Geräuschen, Vibrationen oder nicht normalem Verhalten der Gelenkwelle die Ursache überprüft und behoben werden.

Abschmierung

GWB-Gelenkwellen werden einbaufertig, mit Fett abgeschmiert, geliefert.

- Für das Nachschmieren der Gelenkwellen sind Standardfette nach STD 4006-000 wie z.B. Lithiumkomplex Fett Shell-Retinax LX mit der Kennzeichnung KP2N-20 nach DIN 51502, einem Schmierfett nach DIN 51818 zu verwenden.
  Keine Schmierfette mit MoS_2-Zusätzen einsetzen!
- Schmiernippel sind vor dem Nachschmieren zu säubern.
- Beim Nachschmieren darf der Schmierstoff nicht mit hohem Druck oder harten Schmierstößen eingepresst werden.
  Max. zulässiger Schmierdruck 15 bar (15×10^5 Pa).
- Gelenkwellen, die länger als 6 Monate gelagert wurden, müssen vor Inbetriebnahme abgeschmiert werden.
- Bei der Reinigung von Gelenkwellen keine aggressiven chemischen Reinigungsmittel verwenden. Bei Reinigung mit Hochdruckreinigern den Druckstrahl nicht direkt auf die Dichtung richten! Dichtungen können beschädigt werden, Schmutz und Wasser können eindringen. Nach einer Reinigung muss in jedem Fall ein Nachschmieren erfolgen, bis das Fett an den Dichtungen austritt.

Zapfenkreuzgarnituren

Zapfenkreuzgarnituren sind über einen zentral am Zapfenkreuz oder auf dem Büchsenboden angeordneten Kegelschmiernippel nach DIN 71412 nachzuschmieren.

Maintenance

Maintenance intervals

Cardan shafts are used in a great variety of industrial plants with very different operating conditions.

We recommend inspections at regular intervals and, if possible, to coordinate them with maintenance work on other parts of the equipment. However maintenance work should be carried out once a year at least.

Inspection

- *Check the flange bolts for tightness and retighten them with the prescribed torque (see flange boltings).*
- *Backlash inspection. By lifting the joints and the length compensation check the visible or tangible backlash.*

Check the cardan shaft for any unusual noise, vibration or abnormal behaviour and repair the damage, if any.

Lubrication

GWB cardan shafts are lubricated with grease and ready for installation.

- *For the re-lubrication of cardan shafts use a standard grease acc. to STD 4006-000 as for example a lithium-complex grease of the following specification only: KP2N-20 / DIN 51502 acc. to DIN 51818.*
  Do not use grease with molycote additives!
- *Clean the grease nipples before re-lubricating.*
- *Do not grease with too high a pressure or with hard jerks. Max. permissible lubricating pressure 15 bar (15×10^5 Pa).*
- *Cardan shafts that have been stored for more than 6 months must be re-greased before use.*
- *When cleaning cardan shafts, do not use aggressive chemical detergents or pressurized water or steam jets because the seals may be damaged and dirt or water may penetrate. After a cleaning the cardan shaft must be re-greased until the grease escapes out from the seals.*

Journal cross assemblies

The journal cross assemblies may be re-lubricated via a conical grease nipple (DIN 71412) located in the middle of the cross or at the bottom of the bush.

Zentralabschmierung
Central lubrication

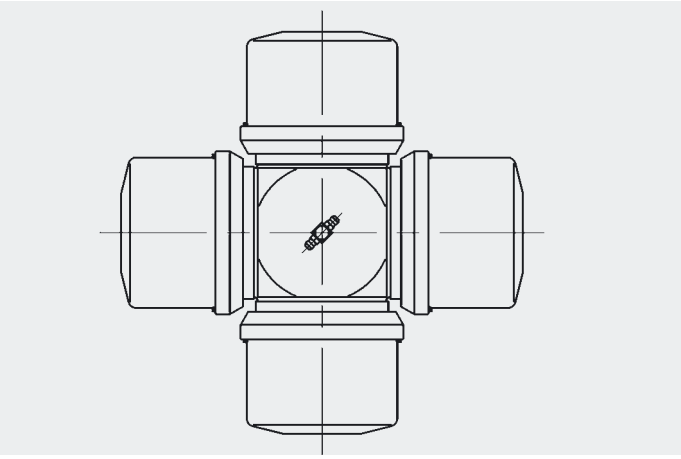

Die Dichtungen der Zapfenkreuzlagerungen müssen durchgeschmiert werden. Beim Nachschmieren ist so lange Fett einzubringen, bis es an den Dichtungen der Lager austritt.

Das Abschmieren der Baureihe 498 (in Sonderfällen auch bei den Baureihen 390, 392, 393, 492) ist über Flachschmiernippel nach DIN 3404 durchzuführen. Das dargestellte Hilfsschmierrohr ist als Adapter zwischen Kegelschmiernippel (nach DIN 71412) an der Gelenkwelle und Flachschmiernippelanschluss an der Fettpresse zu verwenden (siehe Bild)

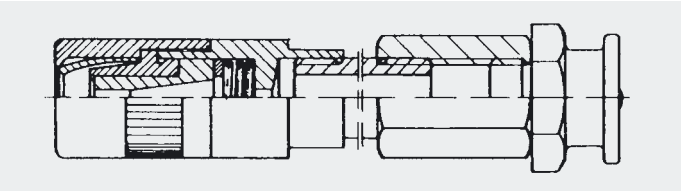

Büchsenbodenabschmierung
4 point lubrication

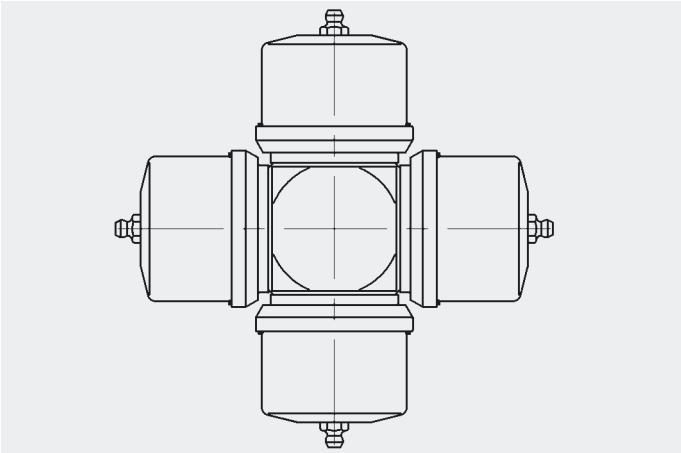

The seals of the journal cross bearings must be lubricated until the grease passes through from the seals of the bearings.

Cardan shafts of the series 498 (in special cases also the series 390, 392, 393, 492) must be lubricated via a flat grease nipple according to DIN 3404. The illustrated adapter pipe can be used as adapter between a conical grease nipple at the cardan shaft (acc. to DIN 71412) and a flat grease nipple connection at the grease pump (see illustration).

Bestell-Nr.:	86 05 006 (90 mm lang) 86 05 025 (300 mm lang)
Order No.:	*86 05 006 (90 mm length)* *86 05 025 (300 mm length)*

Längsverschiebung

Die Längsverschiebungen der Baureihe 687/688 sind in der Standardversion wartungsfrei. Die Abschmierung der Baureihen 390, 392, 393, 492, 190 und 587, sowie Sonderausführungen der Baureihe 687/688, erfolgt im Regelfall über ein kombiniertes Abschmier- und Entlüftungsventil mit Kegelschmiernippel nach DIN 71412 (ohne Dichtkugel im Schmiernippel).

Die Abschmierung bei der Baureihe 498 geschieht über Flachschmiernippel nach DIN 3404.

- Abschmier- und Entlüftungsventile dürfen nicht entfernt oder durch Standard-Schmiernippel ersetzt werden.
- Abdeckkappen der Schmiernippel müssen vor Inbetriebnahme unbedingt entfernt werden.
- Das Nachschmieren sollte bei zusammengeschobener Länge L_z oder kürzester Betriebsstellung vorgenommen werden.

Length compensation

The length compensation of the standard version of the series 687/688 is maintenance-free. The length compensation of the series 390, 392, 393, 492, 190 and 587 as well as special designs of the series 687/688 is lubricated via a combined grease and air-relief valve with a conical grease nipple according to DIN 71412 (no self-locking grease nipple).

The length compensation of the series 498 is lubricated via a flat grease nipple according to DIN 3404.

- *Grease and air-relief valves must not be removed or replaced by standard grease nipples.*
- *Protection caps should be removed from the grease nipples before operation.*
- *Re-lubricating should be done at the shortest compressed length L_z of the shaft.*

Empfohlene Nachschmierfristen

Für Gelenkwellen werden folgende Nachschmier- bzw. Kontrollzeiträume empfohlen (siehe Tabelle):

Recommended re-greasing intervals

We recommend the following inspection and re-greasing intervals.

Baureihe *Series*	Nachschmierintervalle / *Re-greasing intervals*	
	Gelenke / *Joints*	Verschiebung / *Length compensation*
587	6 Monate/*months*	6 Monate/*months* 1)
687/688	6 Monate/*months*	wartungsfrei/*maintenance-free* 12 Monate/*months* 1)
190	6 Monate/*months*	6 Monate/*months*
390	6 Monate/*months*	6 Monate/*months*
392/393	6 Monate/*months*	6 Monate/*months*
492/498	3 Monate/*months*	3 Monate/*months*

1) bei abschmierbarer Profilverschiebung

1) *for greasable length compensation*

- Ungünstige Einflüsse wie Temperatur, Schmutz, Wasser u. a. können kürzere Schmierperioden erforderlich machen. Grundsätzlich empfehlen wir, die Schmierintervalle den jeweiligen Betriebsbedingungen anzupassen.
- Für Gelenkwellen mit kunststoffbeschichteter Profilverschiebung (auf Kundenwunsch) können die Nachschmierintervalle, in Abhängigkeit vom Anwendungsfall, auf 12 Monate verlängert werden.

- *Unfavourable effects like temperature, dirt and water may necessitate shorter lubricating intervals. Principally we recommend adapting the lubricating intervals to the individual operating conditions.*
- *For cardan shafts with plastic-coated splines (on request) the re-lubricating intervals may be extended, dependent on the application, to 12 months.*

Instandsetzung

Aus Sicherheitsgründen sollten Gelenkwellen nur von GWB oder GWB-zugelassenen Reparaturwerkstätten instandgesetzt werden.

Die Instandsetzung von Gelenkwellen wird durch unseren Gelenkwellenservice fachmännisch durchgeführt. Hier erfolgt die Überholung der Wellen unter Verwendung von Originalersatzteilen. Eine Instandsetzung von Gelenkwellen durch den Kunden ist nur für den Notfall in Erwägung zu ziehen und für Anlagen gültig, in denen Gelenkwellen mit Drehzahlen unter 500 min^{-1} laufen. Bei Drehzahlen über 500 min^{-1} müssen die Gelenkwellen ausgewuchtet werden.

⚠ Beim Austausch von Zapfenkreuzgarnituren empfehlen wir, die Lagerdeckelschrauben bei den Baureihen mit geteilten Lageraugen ebenfalls auszutauschen. Beachten Sie hierbei unsere Montage- und Instandsetzungsvorschriften. Bitte sprechen Sie uns an.

Repair

For safety reasons, cardan shafts should only be repaired by GWB or by GWB-approved repair shops.

The repair of cardan shafts is carried in a professional manner by our cardan shaft service experts. The shafts are overhauled using original spare parts. The repair of cardan shafts by the user should only be made in emergency cases and only for such equipment where the operating speed of the shaft does not exceed 500 rpm. If the speed exceeds 500 rpm, the cardan shaft must be rebalanced.

⚠ *If journal cross assemblies are to be replaced, we also recommend replacing the bearing cap screws of shafts of the series with split yokes. Observe our installation and repair instructions. Please contact us.*

Umweltschutz

Ein besonderes Augenmerk unseres Umweltschutzmanagement widmet sich der Produktverantwortung. Daher wird die Umweltauswirkung von Gelenkwellen besonders beobachtet. So werden unsere Gelenkwellen mit bleifreien Fetten abgeschmiert; ihre Lackierungen sind lösemittelarm und schwermetallfrei; sie sind reparaturfreundlich und können nach dem Nutzungsende dem Wertstoffkreislauf wieder zugeführt werden.

Environmental Protection

A particular feature of our environmental protection management is dedication to product responsibility. As a result the effect of driveshafts on the environment is given particular attention. Thus our driveshafts are lubricated with lead-free grease, their paint finishes are low in solvents and free of heavy metals, they are easy to maintain and after use can be re-introduced into the re-cycling process.

Hinweise zur Auslegung, abweichend von den allgemeinen Richtlinien

Gelenkwellen in Schienenfahrzeugen

Die Auslegung der Sekundärwellen in Schienenfahrzeugen hat zusätzlich nach dem zu übertragenden Höchstdrehmoment aufgrund der Haftung zwischen Rad und Schiene (Adhäsionswert) zu erfolgen.

Gelenkwellen in Kranantrieben

Die für Fahrantriebe von Krananlagen zutreffenden besonderen Betriebsbedingungen wurden bei der Erstellung der DIN 15 450 berücksichtigt. Für derartige Antriebe soll deshalb die Auswahl der Gelenkwelle nach dieser Norm erfolgen.

Gelenkwellen in Schiffsantrieben

Bei abnahmepflichtigen Gelenkwellen sind die Richtlinien der jeweiligen Abnahme-Gesellschaften zu berücksichtigen.

Gelenkwellen in sonstigen Anlagen zur Personenbeförderung

Bei Anwendung von Gelenkwellen zum Beispiel in Fahrgeschäften, Liften, Seilbahnen, Aufzügen, Schienenfahrzeugen usw. sind die Vorschriften bzw. Normen von Aufsichtsbehörden und Genehmigungsbehörden zu beachten.

Auswahl von Gelenkwellen

**Die Wahl einer Gelenkwelle wird nicht allein durch das max. zulässige Drehmoment der Gelenkwelle und die vorhandenen Anschlüsse bestimmt.
Sie ist ebenfalls abhängig von einer Vielzahl von Einflußgrößen. Richtlinien zur exakten Bestimmung (siehe Kapitel Auswahl von Gelenkwellen).**

Unsere Projektingenieure beraten Sie und übernehmen für Sie die Wahl der richtigen Gelenkgröße unter Verwendung computergesteuerter Rechenprogramme.

Dazu benötigen wir von Ihnen folgende Daten:

- **Einbaulänge der Gelenkwelle**
- **Winkelverhältnisse**
- **erforderliche Verschiebung**
- **max. Gelenkwellen-Drehzahl**
- **Abmessungen der Anschlüsse**
- **max. Drehmoment auf die Gelenkwelle**
- **Nenndrehmoment auf die Gelenkwelle**
- **Lastkollektiv**
- **Beschreibung der Anlage mit Einsatzbedingungen und Umgebungseinflüssen**

Selection procedures for specific applications

Cardan shafts in railways transmissions

The selection of cardan shafts in the secondary system of rail vehicles must be based on the maximum torque that can be transmitted to the track (wheel slip or adhesion torque).

Cardan shafts in crane travel drives

The particular operating conditions for travel drives of cranes have been taken into consideration in the DIN-standard 15 450. Therefore, cardan shafts of those applications can be selected by using this standard.

Cardan shafts in marine transmissions

Those cardan shafts are subject to acceptance and must correspond to the standards on the respective classification society.

Cardan shafts for other forms of passenger conveyance

Cardan shafts used in amusement park equipments, ski lifts or similar lift systems, elevators and rail vehicles must be in accordance with the standards and specifications of the licence and supervisory authority.

Selection of cardan shafts

The selection of a cardan shaft is not only determined by the maximum permissible torque of the shaft and the connections. It also depends on a variety of other factors. For the exact determination and selection of cardan shafts (see selection of cardan shafts).

Our engineers will be pleased to advise you on the selection of the right size of the shaft and joint by applying computer programmes.

For this purpose we require the following data from you:

- ***Installation length of the cardan shaft***
- ***max. joint angle requirement***
- ***the required length compensation***
- ***the maximum rotation speed of the shaft***
- ***the shaft end connection details***
- ***the maximum torque to be transmitted***
- ***the nominal torque to be transmitted***
- ***the load occurrences***
- ***description of the equipment and the working conditions***

Spicer Gelenkwellenbau GmbH & Co. KG, E-Mail: industrial@gwb-essen.de, Internet: http://www.gwb-essen.de
P. O. Box 101362 – D-45013 Essen, 2. Schnieringstr. 49 – D-45329 Essen, Telefon: 0049 (0)201 / 8124-0

Inland / *Home Country*

GKN Service International GmbH
Service-Center Hamburg
D-22525 Hamburg
Ottensener Str. 150
Tel. 0 40-54 00 90-0
Fax 0 40-54 00 90-43

Ausland / *Foreign Country*

Australien/*Australia*
Hardy Spicer Division of Unidrive Pty. Ltd.
45-49 McNaughton Road
Clayton, Victoria 3168
Tel. 0061-395424100
Fax 0061-395448117
E-Mail: rplowman@hardyspicer.com.au

Belgien/*Belgium*
N.V. Glaenzer Seurre S.A.
Av. Paul Gilsonlaan 441
B-1620 Drogenbos
Tel. 0032-2-3711830
Fax 0032-2-3711826
E-Mail: glsindustrie@amo.add.gknplc.com

Brasilien/*Brazil*
Dana Industrial Ltda.
Av. Fukuichi Nakata,
451/539 - Piraporinha - Diadema
Sao Paulo – 09950-400
Tel. 0055-11-40755700
Fax 0055-11-40755875
E-Mail: fabricio.santos@dana.com

China/*R.O.C.*
Wuxi Driveshafts & Machinery, Co.
88 W. Renmin Road, Hudai, Wuxi
Jiangsu Province, China 214161
Tel. 0086-510-559-1729
Fax 0086-510-559-8853
E-Mail: office@bcwxz.com
Internet: http://www.bcwxz.com

Dänemark/*Denmark*
Dansk Uni-Cardan A/S
Baltorpbakken 10
DK-2750 Ballerup
Tel. 0045-44866844
Fax 0045-44688822
E-Mail: info@uni-cardan.dk
Internet: http://www.uni-cardan.dk

Finnland/*Finland*
Oy Unilink AB
Lapinrinne 1
FIN-00180 Helsinki-Helsingfors
Tel. 00358-9-6866170
Fax 00358-9-6940449
E-Mail: UNILINK@unilink.fi

Frankreich/*France*
GKN Glenco
170, rue Léonard de Vinci
F-78955 Carrières sous Poissy
Tel. 0033-1-30068431
Fax 0033-1-30068439
E-Mail: industrie@gknglenco.com

Griechenland/*Greece*
Sokrates Mechanics GmbH
9, Victoria Square
GR-10434 Athen
P. O. Box 3020
GR-10210 Athen
Tel. 0030-1-8233403
Fax 0030-1-8224784
E-Mail: sokrates@enternet.gr
Internet: http://www.enternet.gr/sokrates
Hellas Cardan GmbH
P. O. Box 40105, 56430 Stawrupolis
GR-56410 Thessaloniki
Tel./Fax 0030-31-682806

Großbritannien/*Great Britain*
GKN Driveline Ltd.
Higher Wood Croft, Leek
GB-Staffordshire ST13 5QF
Tel. 0044-1538-384278
Fax 0044-1538-371265

Indien/*India*
XLO India Ltd.
78-B, Dr. Annie Besant Road
Worli, Mumbai 400018
Tel. 0091-22-4937451
Fax 0091-22-4934925
E-Mail: exloin@vsnl.com

Israel/*Israel*
Frank Agencies
P. O. Box 22307, 10 Pinkas Str.
62661 Tel Aviv
Tel. 00972-3-5441941
Fax 00972-3-5441438
E-Mail: frank-ag@frank.co.il

Italien/*Italy*
Uni-Cardan Italia S.p.A.
Via G. Ferraris 125
I-20021 Ospiate di Bollate (MI)
Tel. 0039-02-383381
Fax 0039-02-38302122
E-Mail: info@unicardanitalia.it

Japan/*Japan*
Nakamura Jico Co. Ltd.
10-10, Tsukiji, 3-chome
Chuo-Ku, Tokyo
Tel. 0081-3-3543-9772
Fax 0081-3-3543-9779

Niederlande/*Netherlands*
UNI-CARDAN Nederland B.V.
Haarlemmer Straatweg 155-157
NL-1165 MK Halfweg
Tel. 0031-20-4070207
Fax 0031-20-4070227
E-Mail: industrie@uni-cardan.nl

Norwegen/*Norway*
UNI-CARDAN NORGE A. S.
Postboks 66, Grefsen
N-0409 Oslo
Tel. 0047-22098800
Fax 0047-22098809
E-Mail: rk@gkn-unicardan.no

Österreich/*Austria*
GKN Service Austria GmbH
Slamastrasse 32
Postfach 53
A-1232 Wien
Tel. 0043-1-6163880
Fax 0043-1-6163828
E-Mail: gkn.austria@mail.gkngsa.co.at
Internet: http://www.gkngsa.co.at

Auch zuständig für/*Also responsible for:*
Tchechien, Slowakei, Slowenien, Kroatien, Ukraine, Rumänien, Bulgarien, Jugoslawien

Schweden/*Sweden*
Svenska Uni-Cardan AB
Stensätravägen 9
Box 3100
S-12703 Skärholmen
Tel. 0046-86039700
Fax 0046-86039701
E-Mail: info@unicardan.se
Internet: http://www.unicardan.se

Schweiz/*Switzerland*
Schaffner – Behrend GmbH
Althardstrasse 141
CH-8105 Regensdorf
Tel. 0041-1-871-60 70
Fax 0041-1-871-60 80
E-Mail: schaffner-behrend@amo.gknplc.com

Spanien/*Spain*
Gelenk Industrial S.A.
Balmes, 152
E-08008 Barcelona
Tel. 00349-3-2374245
Fax 00349-3-2372580
E-Mail: gelenk1@infonegocio.com

Süd-Afrika/*South Africa*
MIDAS Limeted (TMI Propshafts)
294 Brickfield Road
Meadowdale
Germiston 1401
Tel. 0027-11 879 6 322
Fax 0027-11 454 0 380
E-Mail: rnaidoo@midas.co.za

Ungarn/*Hungary*
Szücs Co. Kárdantech KFT
Ipari kepriselelek
Aradi Vertanuk ut. 16
H-9022 Györ
Tel. 0036-96-518 930
Fax 0036-96-518 931
E-Mail: szucsco@alarmix.ne

USA, Kanada/*USA, Canada*
Spicer GWB North America
Merovan Business Center
1200 Woodruff Road
Suite A-5
Greenville S.C. 29607
Tel. 001-864-987-0281
Fax 001-864-987-0295

SPICER GELENKWELLENBAU

Spicer Gelenkwellenbau GmbH & Co. KG
2. Schnieringstr. 49
45329 Essen/Germany

Telefon 00 49 (0) 2 01 – 81 24-0
Telefax 00 49 (0) 2 01 – 81 24-6 52
Internet: www.gwb-essen.de

Einbau und Wartung

für Gelenkwellen / Industrie-Anwendungen

Installation and Maintenance

for Cardan Shafts / Industrial Applications

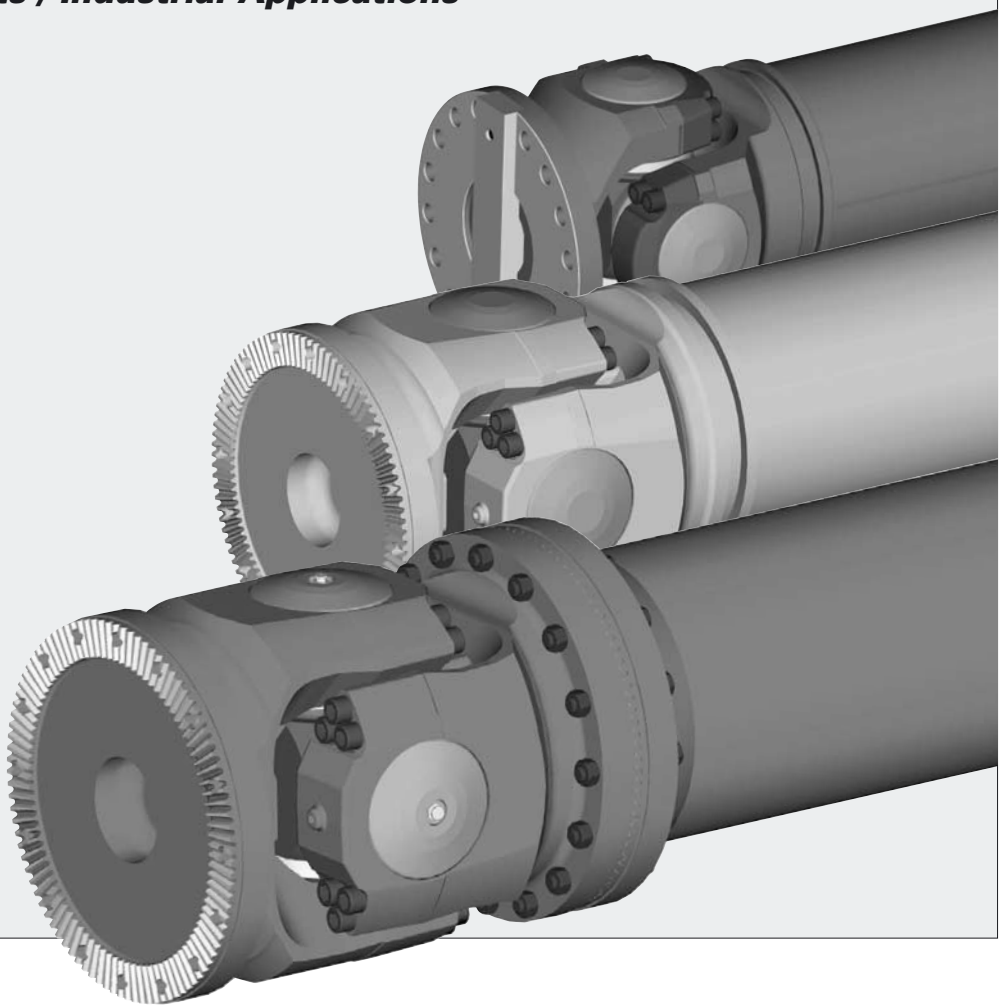

Betriebsanleitung

Operating instructions

Projekt Project	**SHARGH CEMENT**
Besteller Customer	**F.L. SMIDTH A/S**
Flender Auftrags-Nr. Flender order no.	**4.190.294-80-140**

FLENDER

A. Friedr. Flender AG · D 46393 Bocholt · Tel. 02871/92-0 · Telefax 02871/92-2596 · http://www.flender.com

Contents

1. Technical data — **TD 4.190.294-80-140 EN** Rev.
- Technical data

2. General notes — **BA 73 00 02 0000 EN** Rev.
- Introduction
- General scope of application
- Use as specified
- Copyright

3. Safety notes — **BA 73 00 03 0034 EN** Rev.
- Safety notes

4. Handling and storage — **BA 92 04 04 0028 EN** Rev. a
- Scope of supply
- Handling and storage
- Standard corrosion protection

5. Technical description — **BA 92 04 05 0033 EN** Rev.
- General remarks
- Design and function

6. Assembly — **BA 92 04 06 0031 EN** Rev. a
- General information on installation
- Foundation
- Description of installation operations
- Gear Unit with Oil Supply System
- Assembling the couplings

7. Start-up — **BA 92 04 07 0030 EN** Rev.
- Procedure before start-up
- Charging with lubricant
- Start-up
- Removal from service

8. Operation — **BA 92 04 08 0024 EN** Rev.
- General operating data
- Modes of rotary furnace operation

9. Faults, causes and remedy — **BA 92 04 09 0014 EN** Rev. c
- General information on malfunctions
- Possible causes

10. Maintenance and repair — **BA 92 04 10 0030 EN** Rev.
- General information on maintenance
- Description of maintenance and repairs
- Lubricants

11. Spare parts, service facitily addresses — **BA 73 00 11 0000 EN** Rev. a
- Spare parts stock
- Addresses of replacement part suppliers and service organizations

Diese technische Unterlage hat gesetzlichen Schutz (DIN 34)

12. Appendix

AH 4.190.294-80-140 EN Rev.

- Lubricants
- Service facility addresses
- Declaration by the manufacturer
- Drawings
- Spare parts list
- List of equipment

Diese technische Unterlage hat gesetzlichen Schutz (DIN 34)

Contents

1. Introduction 2

2. General scope of application 2

3. Use as specified 2

4. Copyright 2

Diese technische Unterlage hat gesetzlichen Schutz (DIN 34)

1. Introduction

The Operating Instructions must be read, understood in all respects and observed by those persons who are responsible for use of the FLENDER product.

Only familiarization with the Operating Instructions will prevent malfunction of the product and ensure trouble-free operation. It is important therefore that the persons actually responsible should be familiar with theses Operating Instructions.

Careful study of these Operating Instructions before handling our product and before startup is essential, as we accept no liability for damage and malfunctions resulting from non-compliance of these Operating Instructions.

Note: We reserve the right to amend these these Operating Instructions where rendered necessary by improvement of the products.

2. General scope of application

The product is intended for the scope of application as specified in the Technical Data.

3. Use as specified

The product is designed only for the scope of application specified in the Technical Data.

Before the product is used outside the scope of use as specified by the contract, this must be agreed with FLENDER, as otherwise the warranty will be invalidated.

4. Copyright

Copyright of these Operating Instructions remains the property of FLENDER AG.

These Operating Instructions are intended for the installation, operating and supervisory personnel. They may not be duplicated in whole or in part or used without authorization for the purpose of competition or communicated to others.

FLENDER AG

D-46393 Bocholt
Germany

Phone: 02871/92-0
Fax: 02871/92-2596

Diese technische Unterlage hat gesetzlichen Schutz (DIN 34)

Contents

1. Safety notes 2
1.1 Notes and symbols in the Operating Instructions 3
1.2 Modes of operation 3
1.2.1 Blocking brake 3
1.2.2 Avoidance of excessive speed 3
1.2.3 Centrifugal brake 3
1.2.4 Normal operation with the main motor 3
1.2.5 Operation with the auxiliary drive 4
1.2.5.1 Starting clutch (for slow running) 4
1.2.5.2 Auxiliary drive for slow running (e.g. during the cooling down phase/warming up phase) 4
1.2.5.3 Maintenance operation (e.g. for lining work) 5
1.2.6 Emergency stop 5
1.2.6.1 Emergency stop during normal operation with the main motor 5
1.2.6.2 Emergency stop operation with the auxiliary drive 5

Diese technische Unterlage hat gesetzlichen Schutz (DIN 34)

1. Safety notes

- The gear unit has been manufactured in accordance with the state of the art and is delivered in a condition for safe and reliable use. Any changes on the part of the user which may affect safety and reliability are prohibited. This applies equally to safety features designed to prevent accidental contact.
- The gear unit should be used and operated only within the context of the conditions laid down in the contract governing performance and supply.
- The operator must ensure that all persons involved in installation, operation, maintenance and repair have read and understood these Operating Instructions (BA) and comply with them at all times in order to:

  – avoid injury or damage,

  – ensure the safety and reliability of the unit,

  and

  – avoid disruptions and environmental damage through incorrect use.
- During transport, assembly, installation, dismantling, operation and maintenance of the unit, the relevant safety and environmental regulations must be complied with at all times.
- The gear unit should be operated, maintained or repaired by authorised, trained and qualified personnel.
- The gear unit must not be cleaned using high-pressure cleaning equipment.
- All work must be carried out with great care and with due regard to safety.
- All work on the gear unit must be carried out only when it is not in operation.
  The drive unit must be secured against being switched on accidentally (e.g. by locking the key switch or removing the fuses from the power supply). A notice should be attached to the start switch stating clearly that work is in progress.
- During oil changes the old oil should be collected in a suitable receptacle. Any pools of oil which may have collected should be removed at once with an oil binding agent.
  Very dirty and oil-soaked cleaning rags should be kept in suitable containers.
  The old oil, the oil binding agent and the cleaning rags should be disposed of in accordance with the relevant environmental protection regulations.
- If any changes are noticed during operation (e.g. overheating or unusual noises), the drive assembly must be switched off immediately.
- Rotating drive components such as couplings, gearwheels, belt drives etc. must be protected against accidental contact.
- If the gear unit is intended for installation in plant or machinery, the manufacturer of such plant or machinery must ensure that the contents of these Instructions are incorporated in his own instructions.
- Notices attached to the gear unit, e.g. rating plate, direction arrows etc. must always be observed. They must be kept free from dirt and paint at all times. Missing plates must be replaced.

Diese technische Unterlage hat gesetzlichen Schutz (DIN 34)

1.1 Notes and symbols in the Operating Instructions

Instructions in the Operating Instructions which concern operating safety are emphasized as follows:

⚠ This symbol indicates safety measures which must be observed to avoid **personal injury.**

Caution! This symbol indicates safety measures which must be observed to avoid **damage to the gear unit.**

Note: This note draws attention to general **operating notes** which should be specially observed.

1.2 Modes of operation

1.2.1 Blocking brake

The brake on the input shaft of the auxiliary gear unit is designed as a **blocking brake**. Braking during run back may result in irreparable damage to the overrunning clutch. Braking at the reversing point (reversing the direction of rotation of the rotary furnace) is permitted.

1.2.2 Avoidance of excessive speed

To avoid excessive speed if the overrunning clutch should fail, for safety reasons the blocking brake must be closed when the main motor is running.

The drive must be interlocked accordingly.

1.2.3 Centrifugal brake

When the blocking brake is released, an add-on centrifugal brake automatically provides soft braking during oscillation.

Caution! **The centrifugal brake has an important safety function as a protection against excessive speeds. It must therefore be inspected twice yearly in accordance with the inspection and maintenance regulations.**

1.2.4 Normal operation with the main motor

After the main motor is switched off, the rotary furnace will try to rotate back to its centre-of-gravity position. Due to the reversal of the direction of rotation the overrunning clutch of the auxiliary gear unit acts. If the blocking brake is closed, it prevents the rotary furnace from rotating back. If the blocking brake is open, the centrifugal brake prevents the entire auxiliary drive from running at dangerous excessive speeds during the run-back operation.

Caution! **The centrifugal brake has an important safety function as a protection against excessive speeds. It must therefore be inspected twice yearly in accordance with the inspection and maintenance regulations.**

⚠ **The auxiliary drive may break apart violently as a result of a excessive speed. Ensure that the centrifugal brake always operates faultlessly.**

Diese technische Unterlage hat gesetzlichen Schutz (DIN 34)

Caution! **Starting the main motor while the rotary furnace is moving back will irreparably damage the drive.**

Caution! **The rotary furnace drive must be interlocked so that only the main motor or the auxiliary motor can be started simultaneously. If the main motor and auxiliary motor are started simultaneously, parts of the drive unit may be irreparably damaged. A so-called ”flying start”, i.e. starting with the auxiliary drive first, then engaging the main drive and disengaging the auxiliary drive, is possible.**

In the case of dual drives the main motors must always be started simultaneously on both drive trains.

The blocking brake must be closed when the auxiliary motor is shut off and the main motor is running.

1.2.5 Operation with the auxiliary drive

A separate auxiliary drive is provided for slow running and maintenance work.

Caution! **The rotary furnace drive must be interlocked so that only the main motor or the auxiliary motor can be started simultaneously. If the main motor and auxiliary motor are started simultaneously, parts of the drive unit may be irreparably damaged. A so-called ”flying start”, i.e. starting with the auxiliary drive first, then engaging the main drive and disengaging the auxiliary drive, is possible.**

1.2.5.1 Starting clutch (for slow running)

The hydrodynamic starting clutch is protected against excessive operating temperatures by an electric warning device. When the set temperature is reached, the start of the auxiliary motor must be interrupted until the temperature has normalised.

⚠ **Hot oil may be sprayed from the hydrodynamic starting clutch. You may suffer very severe burns.**
Keep a close watch on the electric warning device on the starting clutch.
The protective cover must always be fitted.

Further attempts at starting would raise the operating temperature still further and thus cause the safety fuse to operate.

The switching limit of the electric warning device must be set to at least 30 °C below the actuating temperature of the safety fuse to protect the hydrodynamic starting clutch.

1.2.5.2 Auxiliary drive for slow running (e.g. during the cooling down phase/warming up phase)

Before starting the blocking brake must be closed or the rotary furnace have been oscillated into its centre-of-gravity position.

When the auxiliary motor is started, the blocking brake must, if necessary, be released (on hydrodynamic couplings with a time delay of 1 to 3 seconds).

If both auxiliary drives are needed on twin drives, the auxiliary motors must always be started on both drive trains at the same time or with a maximum delay of 1 to 3 seconds.

Diese technische Unterlage hat gesetzlichen Schutz (DIN 34)

After the auxiliary motor is shut off, if the blocking brake is open, the rotary furnace begin to rotate back into its centre-of-gravity position because of the one-sided material filling of the furnace. Due to the reversal of the direction of rotation the overrunning clutch of the auxiliary gear unit acts. If the blocking brake is closed, it prevents the rotary furnace from rotating back. If the blocking brake is open, the centrifugal brake prevents the entire auxiliary drive from running at dangerous excessive speeds during the run-back operation.

⚠ **The auxiliary drive may break apart violently as a result of a excessive speed. Ensure that the centrifugal brake always operates faultlessly.**

1.2.5.3 Maintenance operation (e.g. for lining work)

During maintenance work it is normally necessary to bring the rotary furnace into a certain position, hold it in an unstable position and start it in this unstable position.

When the auxiliary motor is started, the blocking brake must also be released (on hydrodynamic couplings with a time delay of 1 to 3 seconds).

In the case of stop (positioning), during maintenance work the blocking brake must be closed and the auxiliary motor stopped simultaneously.

If both auxiliary drives are needed on twin drives, the auxiliary motors must always be started on both drive trains at the same time or with a maximum delay of 1 to 3 seconds.

In the case of longer planned standstill, after conclusion of maintenance work the blocking brake should be opened and the rotary furnace allowed to rotate back into its centre-of-gravity position. The blocking brake can then be closed.

1.2.6 Emergency stop

1.2.6.1 Emergency stop during normal operation with the main motor

After the main motor is switched off (emergency stop), the rotary furnace will try to rotate back to its centre-of-gravity position. Due to the reversal of the direction of rotation the overrunning clutch of the auxiliary gear unit acts. The blocking brake, which is closed during normal operation, holds the rotary furnace in an unstable position.

In the case of dual drives the main motors must always be switched off (emergency stop) simultaneously on both drive trains.

1.2.6.2 Emergency stop operation with the auxiliary drive

After the auxiliary motor is switched off, the blocking brake must be closed simultaneously. The rotary furnace tries to rotate back into its centre-of-gravity position. Due to the reversal of the direction of rotation the overrunning clutch of the auxiliary gear unit acts. The closed blocking brake holds the rotary furnace in an unstable position.

In the case of auxiliary drives the main motors must always be switched off (emergency stop) simultaneously on both drive trains.

Diese technische Unterlage hat gesetzlichen Schutz (DIN 34)

Contents

1. Scope of supply **2**

2. Handling and storage **2**
2.1 Handling 2
2.2 Storage 3

3. Standard corrosion protection **4**

Diese technische Unterlage hat gesetzlichen Schutz (DIN 34)

1. Scope of supply

The products supplied are listed in the dispatch papers. Check immediately on receipt to ensure that all the products listed have actually been delivered. Damaged or missing parts must be notified in writing immediately.

The gear unit is delivered in the fully assembled state. Additional items (e.g. pipes and fittings) are delivered separately packaged.

If the unit if fitted with a shrink disc, this will be shipped as a loose component.

2. Handling and storage

Note: Observe the ”Safety notes” in section 3.

2.1 Handling

⚠ **When handling FLENDER products use only lifting and handling equipment of sufficient load-carrying capacity!**
Wedges or rails should be used to prevent rolling.

Different forms of packaging may be used depending on the size of the unit and method of transport. Unless otherwise agreed, the packaging complies with the **HPE Packaging Guidelines**.

The symbols marked on the packaging must be observed at all times. These have the following meanings:

Caution! **The gear unit must always be transported with due care to avoid danger to persons and property. Avoid bumping the ends of shafts as this may damage the gear unit.**

Note: The gear unit must be transported using suitable equipment only. Never transport the gear unit with an oil charge.

Caution! **The gear unit may only be handled using the existing brackets, eye bolts or lifting eyes.**
Do not use the front thread at the end of the shaft for attaching ring bolts for transport purposes.

Caution! **If fitted with a shrink disc, the shrink disc must be secured axially prior to handling.**

Diese technische Unterlage hat gesetzlichen Schutz (DIN 34)

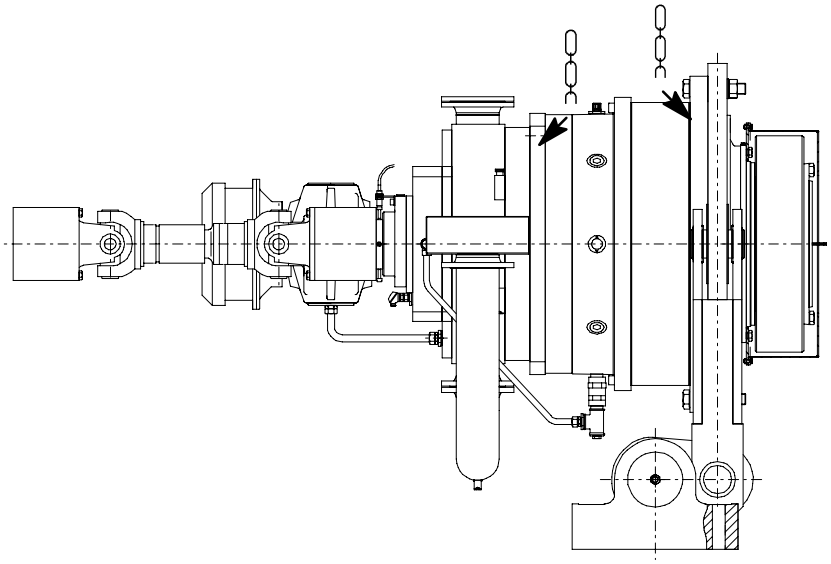

For a detailed illustration of the gear unit, refer to the drawings in the unit documentation.

2.2 Storage

The gear unit must be stored in the position of use in a sheltered place. It must be placed on a vibration-free wooden base and covered over.

⚠ **Do not stack gear units on top of one another.**

Caution! **If the gear unit is being stored out of doors, it must be covered with particular care. It must be ensured that neither moisture nor foreign material can collect on the unit.**

Note: Provision for special environmental conditions during transport (e.g. transport by ship) and storage (climate, termites etc.) must be contractually agreed.

Diese technische Unterlage hat gesetzlichen Schutz (DIN 34)

3. Standard corrosion protection

The gear unit is filled with conservation agent. The free shaft ends are painted for protection.

The outer paint coating is resistant to dilute acids, alkalis, oils and solvents. It is also resistant to sea water, tropical-climate conditions and temperatures up to 140 °C.

Note: Ensure that the paint is not damaged!
Mechanical damage (scratches), chemical damage (acids, alkalis) and thermal damage (sparks, welding beads, heat) cause corrosion which may cause failure of the exterior protective coating.

Note: Unless otherwise agreed, we guarantee for a closed gear unit the interior preservation of the helical-gear unit for 24 months and the preservation of the free shaft ends for 12 months. The guarantee period commences on the date of delivery.

For longer periods of storage (> 24 months) we advise regular checking and, if necessary, renewal of the interior corrosion protection (see section 7 ”Start-up”).

Diese technische Unterlage hat gesetzlichen Schutz (DIN 34)

Contents

1. General **2**

2. Construction and method of operation **3**
2.1 Main gear unit 3
2.1.1 Housing 3
2.1.2 Toothed components 3
2.1.3 Lubrication 3
2.1.4 Storage 3
2.1.5 Shaft seals 3
2.1.6 Cooling 4
2.2 Auxiliary drive 4
2.3 Overrunning clutch 4
2.4 Blocking brake 5
2.5 Centrifugal brake 5
2.6 Shrink disk 5

Diese technische Unterlage hat gesetzlichen Schutz (DIN 34)

1. General

The rotary furnace drive is delivered as a complete drive unit assembled from various components. It is designed for installation in the horizontal position.

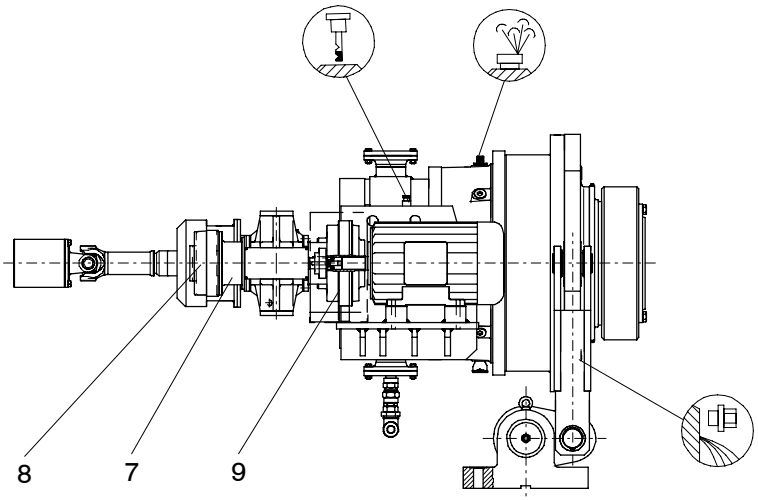

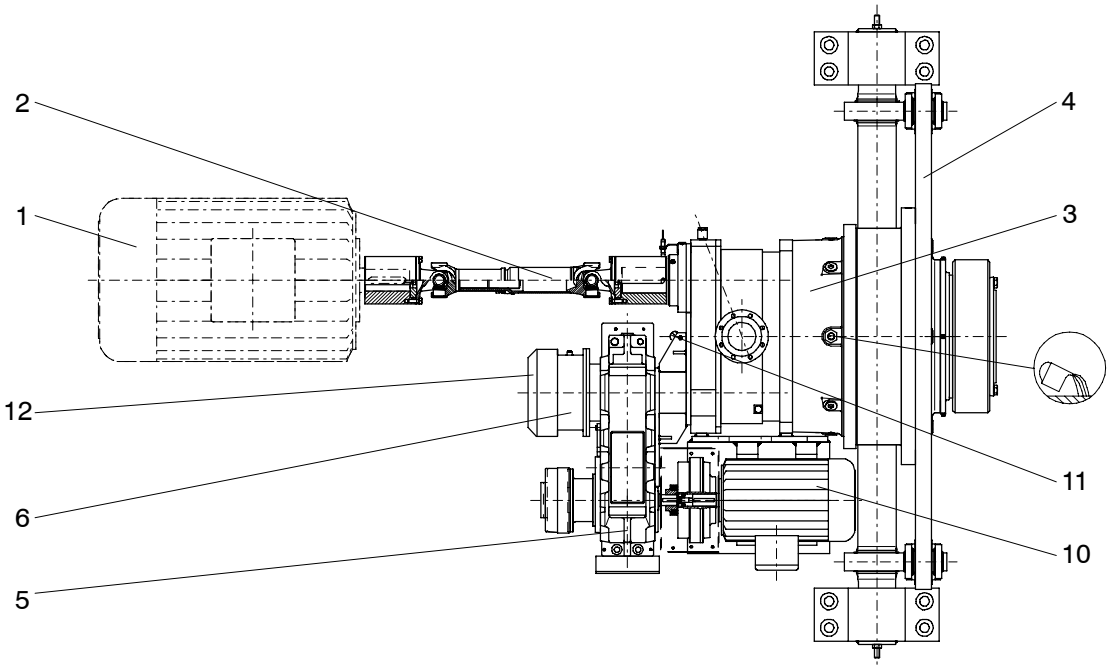

1	Main motor (not included in delivery)	7	Centrifugal brake
2	Cardan shaft	8	Blocking brake
3	Main gear unit	9	Hydrodynamic starting clutch
4	Torque arm	10	Auxiliary motor
5	Auxiliary gear unit	11	Resistance thermometer
6	Overrunning clutch	12	Fan

For a detailed view of the gear unit, see the drawings in the gear-unit documentation.

Diese technische Unterlage hat gesetzlichen Schutz (DIN 34)

2. Construction and method of operation

2.1 Main gear unit

The main gear unit is a helical planetary gear unit and essentially comprises two planet stages, a helical gear stage and a hollow output shaft with shrink disk. The attached auxiliary drive comprises a three-stage helical shaft-mounted gear unit with overrunning clutch, blocking brake, centrifugal brake and hydrodynamic starting clutch.

The gear units are characterised by a low noise level; this is achieved by ground helical gears with a high contact ratio.

For a detailed illustration of the drive please refer to the dimensioned drawing (see section 12, ”Annex”).

2.1.1 Housing

The multi-section gear-unit housing is partly made from high-grade cast iron. The housing of the helical gear stage is designed as a welded part. The housing is rigid in design and due to its form has excellent noise and temperature characteristics.

It is also fitted with a dipstick for checking the oil level, a drain plug for oil change and an air filter for venting the housing.

Colour codes for ventilating, oil inlet, oil level and oil drainage:

Ventilating:	yellow	
Oil inlet:	yellow	
Oil level:	red	
Lubrication points:	red	
Oil drain:	white	

2.1.2 Toothed components

The gear-unit parts with external teeth are case-hardened and ground. The teeth of the helical gear with internal teeth are internally hobbed or shaped. The high quality of the teeth keeps the noise level of the gear unit to a minimum and guarantees reliable operation.

2.1.3 Lubrication

The teeth and rolling bearings of the gear unit are adequately supplied with oil by dip lubrication. As a result the gear units require very little maintenance.

Note: For safety reasons, the gear unit is supplied without oil filling for transport.

2.1.4 Storage

All shafts are mounted in rolling bearings.

2.1.5 Shaft seals

Radial shaft sealing rings at the shaft outlets prevent oil from escaping from the housing and dirt from entering it. Additionally fitted to the high-speed input shaft and the output shaft of the planetary helical gear unit are labyrinth seals which can be refilled with lubricant.

Diese technische Unterlage hat gesetzlichen Schutz (DIN 34)

2.1.6 Cooling

The drive is fitted with an oil supply system for cooling.

For notes regarding the oil-supply unit please see the special Operating Instructions.

2.2 Auxiliary drive

The main gear unit is provided with an auxiliary drive. This enables the gear unit to be operated at a lower output speed in the same direction of rotation. The auxiliary drive is connected with the gear unit by an overrunning clutch.

2.3 Overrunning clutch

The overrunning clutch is located on the output shaft of the auxiliary housing. The oil chamber of the auxiliary housing is connected to the oil chamber of the main gear unit.

⚠ **For oil change of the overrunning clutch please see section 10, ”Maintenance and repair”.**

Overrunning clutches are provided with centrifugally operated grippers. The overrunning clutch acts as a driver in the direction of drive and as a freewheel in the opposite direction of rotation.
In the case of the auxiliary drive the drive takes place through the outer ring of the overrunning clutch.

⚠ **The speeds indicated on the rating plate must not be exceeded in the direction of drive, as otherwise function may be impaired and damage cannot be ruled out.**

In the case of the main drive the inner ring (2) overtakes the outer ring (1) (see Fig. 1). The inner ring and the cage with the sprags rotate during overrun. From a certain speed up (lifting speed) the sprags (4) lift clear. The overrunning clutch then operates wearfree. During this time the overrunning clutch outer ring, which is connected to the auxiliary gear unit via a hollow shaft (200), is stationary.

⚠ **With this drive combination with integrated automatic overrunning clutches the system-specific requirements set out in section 3, ”Safety Notes”, must be observed in all cases!**

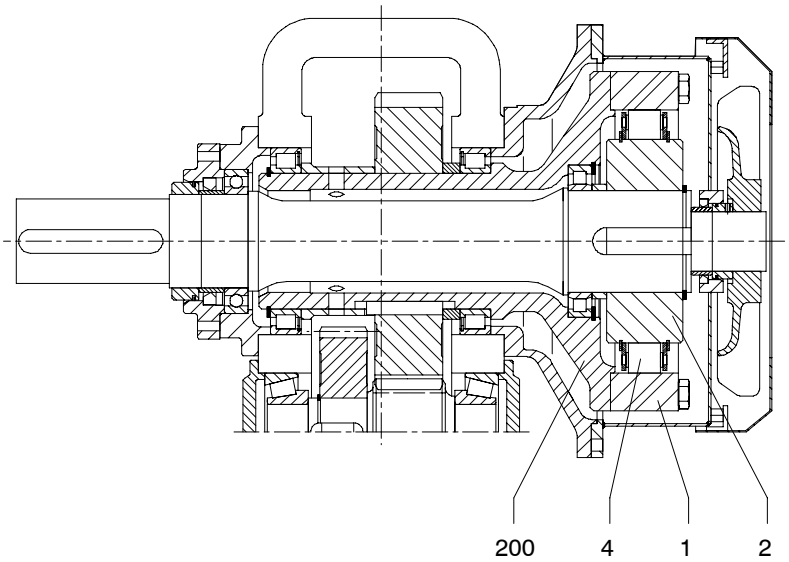

Fig. 1

Diese technische Unterlage hat gesetzlichen Schutz (DIN 34)

Note: The direction of rotation can be changed by reversing the cage. FLENDER must be consulted in all cases on this matter. For this we recommend our customer service (see section 11, ”Spare parts, customer-service addresses”).

⚠ **The overrunning clutch must not be dismantled by unqualified persons, as this may impair safe, reliable operation.**
To prevent damage to or destruction of the overrunning clutch due to excessive speed, it is essential to ensure that the auxiliary drive is not accelerated by the main drive. (when main motor is running, close blocking brake).

The overrunning clutch is fitted with a fan which is secured against accidental contact by a fan cover. The fan sucks ambient air in through the grid on the fan cowl and blows it along the air ducts on the side of the overrunning clutch. This removes heat from the clutch.

Caution! **Make sure that the air intake at the fan cowl is not obstructed.**

2.4 Blocking brake

The braking torque, which can be adjusted by a central adjusting means, is generated by means of spring pressure. Release is done manually or electromagnetically. In a currentless condition the brake is set in the braking position. Readjustment of the brake to compensate for wear is possible without demounting it.

The special Operating Instructions should be noted for operation of the brake.

2.5 Centrifugal brake

If the rotary furnace rotates back, the centrifugal brake restricts the runaway speed on the input shaft of the auxiliary drive.

2.6 Shrink disk

For the main gear unit a shrink disk should be used as a frictional clamping connection between the gear unit hollow shaft and the rotary furnace.

Diese technische Unterlage hat gesetzlichen Schutz (DIN 34)

Contents

1. General information on installation 2

2. Foundation 2

3. Description of installation work 2
3.1 Mounting of the drive unit 2
3.2 Installation of the torque arm 2
3.3 Fitting and demounting the shrink disk 3
3.3.1 Assembly of shrink disk 3
3.3.2 Demounting and remounting the shrink disk 4
3.3.3 Cleaning and greasing the shrink disk 4

4. Gear unit with oil supply system 5
4.1 Mounting of the connecting hoses 5

5. Installation of the clutches 5

Diese technische Unterlage hat gesetzlichen Schutz (DIN 34)

1. General information on installation

During assembly, the ”Safety Instructions” in Section 3 must be observed.

Assembly and installation work must be done with great care by trained and qualified personnel. We earnestly recommend that the customer should have assembly carried out by our customer service (see section 11, ”Spare parts and customer-service addresses”) to prevent damage caused by inproper execution and the resultant exclusion of our liability.

During the planning phase sufficient space must be allowed around the gear unit for later care and maintenance work.

If the auxiliary gear unit is fitted with a fan, there should be sufficient space for air intake.

Adequate lifting equipment must be available before beginning the fitting work.

2. Foundation

The foundation should be designed in such a way that no resonance vibrations are created and that no vibrations are transmitted from adjacent foundations.

Steel structures on which the unit may be mounted must be torsionally rigid. It must be designed according to the mass and torque, taking into account the forces acting on the gear unit.

Note: For dimensions, space requirement, arrangement of supply connections, refer to the drawings in the gear-unit documentation.

3. Description of installation work

The corrosion-preventive coat on the shafts must be removed with suitable cleaning agents (such as benzine).

Caution! **The cleaning agent must never be allowed to come in contact with the shaft seals.**

⚠ **Ensure adequate ventilation. Do not smoke!**
Danger of explosion. Observe current regulations.

3.1 Mounting of the drive unit

The drive unit must be installed with the aid of suitable lifting gear and the lifting holes provided.

3.2 Installation of the torque arm

The torque reaction arm must be installed according to the drawing.

Note: For the main gear unit, the reaction torque corresponding to the torque of the rotary furnace and acting in an opposite direction on the housing must be absorbed.

In the case of the double-sided torque arm the torque is supported by bars and joints on a torsion shaft. This type of construction ensures that the machine bearings are freed from any shearing forces, except for the weights.

Diese technische Unterlage hat gesetzlichen Schutz (DIN 34)

3.3 Fitting and demounting the shrink disk

3.3.1 Assembly of shrink disk

The shrink disk is delivered in its original condition with the unit, loose and ready for mounting.

Caution! **The shrink disk must not be dismantled before tensioning for the first time.**

Caution! **The bore of the hollow shaft and the machine shaft must be absolutely free of grease in the area of the shrink disk seat. This is essential for safe and reliable torque transmission. Do not use contaminated solvents or dirty cloths for removing grease.**

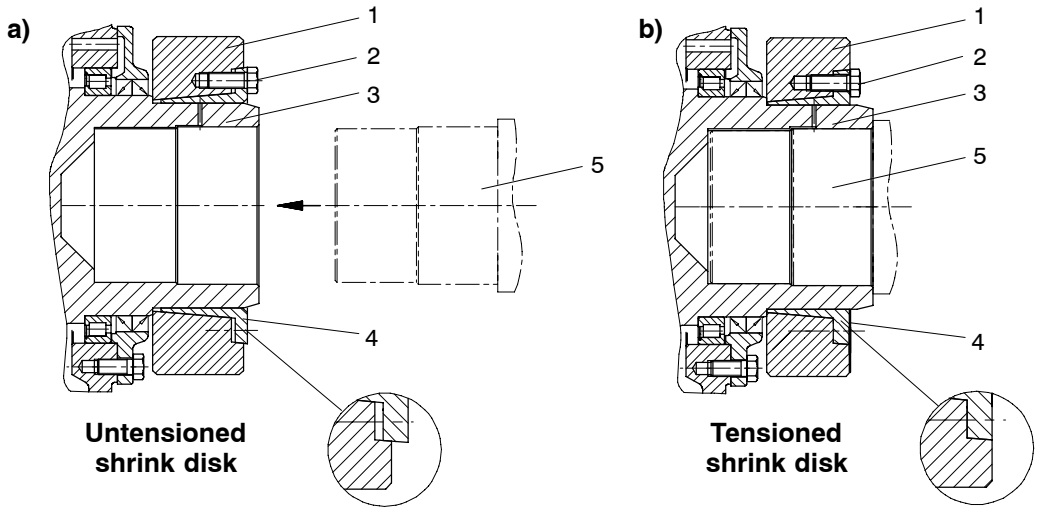

1 Outer ring
2 Tensioning bolts
3 Hollow shaft
4 Inner ring
5 Machine shaft

Part 1 and 4 flush

- Mounting the shaft or fitting the hub onto the shaft

Note: If the gear unit is fitted in a vertical position with the output shaft down, the fitted shrink disk must be protected from dropping.

Caution! **Never tighten the tensioning bolts until the gear unit is installed on the machine shaft.**

- Tighten all the tensioning bolts gradually one after the other, working round several times.

Caution! **Do not tighten diametrically opposite bolts one after the other.**

Caution! **Tighten the tensioning bolts until the front surfaces of the inner and outer rings are aligned [see ”Fig. b)”].**

Note: This allows the tension condition to be checked visually.

Caution! **To avoid overloading the individual bolts, the maximum tightening torque (see table) must not be exceeded. If alignment of the end faces cannot be achieved by tightening, consult FLENDER.**

Diese technische Unterlage hat gesetzlichen Schutz (DIN 34)

Tensioning-bolt thread	max. tightening torque per bolt (with μ = 0.1)	
	Strength class 10.9 Nm	Strength class 12.9 Nm
M 6	12	14.5
M 8	29	35
M 10	58	70
M 12	100	121
M 14	160	193
M 16	240	295
M 20	470	570
M 24	820	980
M 27	1210	1450
M 30	1640	1970
M 33	2210	2650
M 36	2850	3420

Table 6.1: Maximum torques for tensioning bolts
For strength class see bolt head

⚠ **For safety reasons it must be ensured that no contact with the shrink disk is possible during operation.**

3.3.2 Demounting and remounting the shrink disk

- The process of releasing the shrink disk is similar to that of tightening.
- Loosen the tensioning bolts gradually one after the other, working round several times.
- If the outer ring does not release from the inner ring, several tensioning bolts can be removed and then screwed into adjacent forcing threads. This releases the shrink connection.
- Pull the shrink disk off the hollow shaft.

3.3.3 Cleaning and greasing the shrink disk

- Shrink disks should not be dismantled and re-greased before being re-installed. Re-greasing of the sliding surfaces between inner and outer ring is not necessary.

The shrink disk should only be dismantled and cleaned if it is dirty.

Caution! **Following cleaning, only the inner sliding surfaces of the shrink disk should be re-greased.**

Diese technische Unterlage hat gesetzlichen Schutz (DIN 34)

Use a solid grease with a coefficient of friction of μ = 0.04 as shown in the following table.

Lubricant	Form	Manufacturer
Molykote 321 R (lubricating paint)	Spray	DOW Corning
Molykote Spray (powder spray)	Spray	DOW Corning
Molykote G Rapid	Spray or Paste	DOW Corning
Aemasol MO 19 P	Spray or Paste	A. C. Matthes
Molykombin UMFT 1	Spray	Klüber Lubrication
Unimoly P 5	Powder	Klüber Lubrication

Table 6.2: Lubricants for shrink disk after cleaning

4. Gear unit with oil supply system

Observe the Operating Instructions of the Oil Supply System.

4.1 Mounting of the connecting hoses

The connecting hoses should be carefully cleaned and be screwed on in accordance with the drawings. Prior to this remove the screw plugs or blank flanges.

5. Installation of the clutches

Caution! **When installing the clutches, the specific Operating Instructions for the couplings must be observed.**

Before beginning installation, the shaft ends and the clutch parts must be carefully cleaned.

Clutches must be pulled on with the aid of the centring thread on the shaft ends and secured against axial shift.

Caution! **Never use force or knock the clutches into position, as this will cause irreparable damage to the gear unit.**

The clutches are aligned in accordance with the specific Operating Instructions for the couplings.

Diese technische Unterlage hat gesetzlichen Schutz (DIN 34)

Contents

1. Procedure before start-up 2
1.1 Removal of conservation agent 2

2. Charging with lubricant 2

3. Start-up 3

4. Removal from service 4
4.1 Interior conservation during longer disuse 4
4.1.1 Interior conservation with gear oil 4
4.1.2 Interior conservation with special conservation agent 4
4.1.3 Interior conservation procedure 5
4.2 Exterior conservation 5
4.2.1 Exterior conservation procedure 5

Diese technische Unterlage hat gesetzlichen Schutz (DIN 34)

1. Procedure before start-up

Note: Observe the ”Safety notes” in section 3.

1.1 Removal of conservation agent

- Unscrew oil drain plug and drain off the remains of preservative or running-in oil from the housing into a suitable receptacle and dispose of in accordance with regulations.

⚠ **Remove any oil spillage immediately with an oil-binding agent.**

- Replace the oil drain plug

Caution! **Before start-up, replace the yellow plastic plug with air filter (see notice on gear unit).**

⚠ **The oil must not come into contact with skin (e.g. hands of the operating personnel).**
The safety instructions on the data sheets of the used oil should be observed.

2. Charging with lubricant

- Open oil filler plug

Caution! **Fill the gear unit up with fresh oil using a filter (max. mesh 25 µm).**

Note: For the correct type of oil (of various brands) to be used refer to the operating instructions BA 7300 EN supplied separately.
Information on the type, viscosity and quantity of the oil is given on the rating plate on the gear unit.
The quantity of oil stated on the rating plate is an approximation only. The actual oil quantity to be filled in is shown by the marks on the oil dipstick.

Note: In the case of gear units with an oil cooling system, the oil circuit should also be filled up. To do so, the gear unit should be started temporarily in accordance with Section 8.

- Check oil level with the dipstick.

Note: The oil level should be at the top mark on the dipstick.

Caution! **Any oil leaking out must immediately be removed with an oil binding agent.**
The oil must not come into contact with skin (e.g. hands of the operating personnel).
The safety instructions on the data sheets of the used oil should be observed.

- Replace oil filler plug

Gear units with auxiliary drive:

Caution! **Before start-up, ensure that the overrunning clutch can be turned without exerting undue force.**

Diese technische Unterlage hat gesetzlichen Schutz (DIN 34)

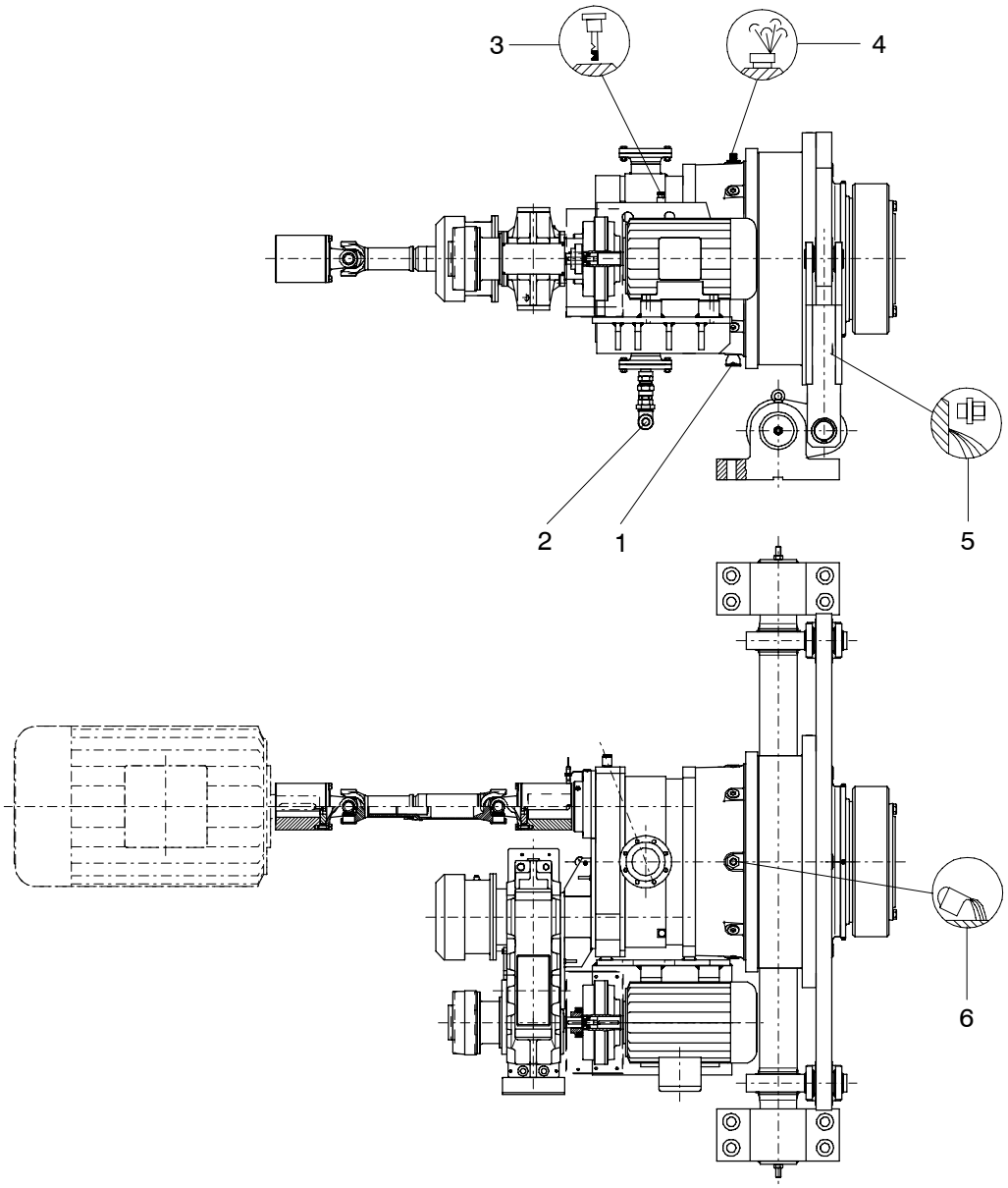

1	Connection for suction pipe	4	Air filter
2	Connection for pressure pipe	5	Oil drain plug
3	Dipstick	6	Oil filler plug

For a detailed illustration of the gear unit, refer to the drawings in the unit documentation.

3. Start-up

- Check oil level of gear unit

Note: When the oil has cooled down, the oil level should be at the top mark on the dipstick. If the oil is hot, the marks may be slightly exceeded. The oil level must, by no means, be below the mark; replenish oil, if necessary.

Diese technische Unterlage hat gesetzlichen Schutz (DIN 34)

Gear unit with overrunning clutch:

Before starting the unit up, ensure that the overrunning clutch can be turned in free-running direction without exerting undue force. Observe the direction arrows on the gear unit.

Before connecting the motors, determine the direction of rotation of the three-phase current supply using a rotating-field indicator. Connect the motors as indicated.

Note: The gear unit must be operated only with an oil-supply unit. The oil-supply unit serves to cool the oil.

4. Removal from service

- To take the gear unit out of service, first switch off the drive assembly.

⚠ **Secure the drive assembly to prevent it from being started up accidentally. Attach a warning notice to the start switch.**

- Close the shut-off valves in the coolant-supply and return pipes (gear units with water-oil-cooling systems only). **Drain the water from water-oil-cooling systems to prevent it freezing.**

Note: During longer periods of disuse, start the unit up briefly at intervals of approx. 3 weeks. If it is to remain out of service for longer than six months, fill it with conservation agent (see point 4.1).

4.1 Interior conservation during longer disuse

Depending on the type of lubrication or shaft sealing, the following types of internal corrosion protection can be used.

4.1.1 Interior conservation with gear oil

Gear units with splash-lubrication systems and contacting shaft seals can be filled with the correct type of service oil up to a point just below the air filter. Replace the air filter with the plug screw.

Caution! **Before starting the unit up again, ensure that the level of the oil has declined to the top mark of the dipstick and the upper plug screw has been replaced by the air filter.**

4.1.2 Interior conservation with special conservation agent

Before longer periods of storage, gear units with pressurised lubrication systems or oil-circuit cooling should be allowed to idle with a charge of conservation agent.

Duration of protection	Conservation agent	Special measures
less than **24** months	Castrol Alpha SP 220 S	Close gear unit, replace venting screw or air filter with a yellow plug screw, (replace the original parts before start-up)
For storage periods longer than 24 months, renew the conservation agent. For storage periods over 36 months, FLENDER should be consulted.		

Table 7.1: Conservation procedure when using mineral oil or PAO-based synthetic oil

Diese technische Unterlage hat gesetzlichen Schutz (DIN 34)

Duration of protection	Conservation agent	Special measures
less than **36** months	Special anti-corrosion oil TRIBOL 1390 1)	Close gear unit, replace venting screw or air filter with a yellow plug screw, (replace the original parts before start-up)
For storage periods over 36 months, FLENDER should be consulted.		

Table 7.2: Conservation procedure when using PG-based synthetic oil

1) Resistant to tropical conditions and sea water. Max. ambient temperature 50 °C

4.1.3 Interior conservation procedure

- Switch the gear unit off and drain the oil as described in section 10 ”Maintenance and repair”.
- Fill conservation agent in accordance with table 7.1 or 7.2, as appropriate, up to the top mark of the dipstick.
- Close the oil-inlet screw again.
- Start the gear unit and allow it to idle for a short time.
- Unscrew the oil drain plug and allow the conservation agent to drain into a suitable container and dispose of it according to regulation.

⚠ **The conservation agent emerging from the gear unit may be hot.**
Wear gloves to avoid scalding.

- Replace the oil drain plug.

Caution! **Before re-starting the gear unit, replace the plug screw with the venting screw or air filter.**
See also point 1.1.

4.2 Exterior conservation

Duration of protection	Conservation agent	Layer thickness	Remarks
less than **12** months	Tectyl 846 K19	approx. 50 µm	Long-term wax-based conservation agent, resistant to sea water and tropical conditions, soluble in benzine

Table 7.3: Exterior protection of shaft ends and other bare surfaces

4.2.1 Exterior conservation procedure

- Clean the surfaces
- Apply grease to shaft-sealing rings to protect the sealing lips from conservation agent
- Apply conservation agent

Diese technische Unterlage hat gesetzlichen Schutz (DIN 34)

Contents

1. General operating data 2
1.1 Measuring-surface sound-pressure level 2

2. Modes of rotary furnace operation 3
2.1 Normal operation with the main motor 4
2.2 Operation with the auxiliary drive 4
2.2.1 Starting clutch (for slow running) 5
2.2.2 Auxiliary drive for slow running (e.g. during the cooling down phase/warming up phase) 5
2.2.3 Maintenance operation (e.g. for lining work) 5

Diese technische Unterlage hat gesetzlichen Schutz (DIN 34)

1. General operating data

During operation, the unit must be monitored for:

- excessive operating temperature (The gear unit is designed for a temperature of 90 °C with mineral oil in continuous operation. For higher temperatures, synthetic oils must be used. perating temperatures of 100 °C are permitted for short periods (see also section 10, ”Maintenance and repair”).)
- changes in gear noise
- possible oil leakage at the housing and shaft seals

and

- correct oil level (see section 7, ”Start-up”).

Note: To check the oil level, stop operation of gear unit.
When the oil is cool, the level should be at the upper mark on the oil dipstick. If the oil is hot, the marks may be slightly exceeded. It must not be allowed to fall below the mark. If necessary, top oil up to the correct level.

Caution! **If any irregularities are noticed during operation, switch the drive unit off at once. Determine the cause of the fault, using the table in section 9.**
This table contains a list of possible faults, their causes and suggested remedies.
If the cause cannot be identified or the unit repaired with the facilities available, you are advised to contact one of our customer-service offices for specialist assistance (see section 11).

1.1 Measuring-surface sound-pressure level

The measuring-surface sound-pressure level of the gear unit at a distance of 1 m can be obtained from section 1, ”Technical data”.

The measurement is carried out to DIN 45635 Parts 1 and 23, using the sound-intensity method.

The workplace of the operating personnel is defined as the area on the measuring-surface at a distance of 1 metre in the vicinity of which persons may be present.

The sound-pressure level applies to the warmed up gear unit at input speed n_1 and input power P_1 stated on the rating plate.

The measuring-surface sound-pressure level includes add-on lubrication units (if applicable). With outgoing and incoming pipes, the interfaces are the flanges.

If repeat measurements on site do not produce conclusive results with regard to measuring technology, the measurement obtained on the FLENDER test bench will apply.

Diese technische Unterlage hat gesetzlichen Schutz (DIN 34)

2. Modes of rotary furnace operation

Three different modes of operation are possible:

- Normal operation with the main motor
- Operation with the auxiliary motor (slow running)
- Maintenance operation (e.g. for lining work)

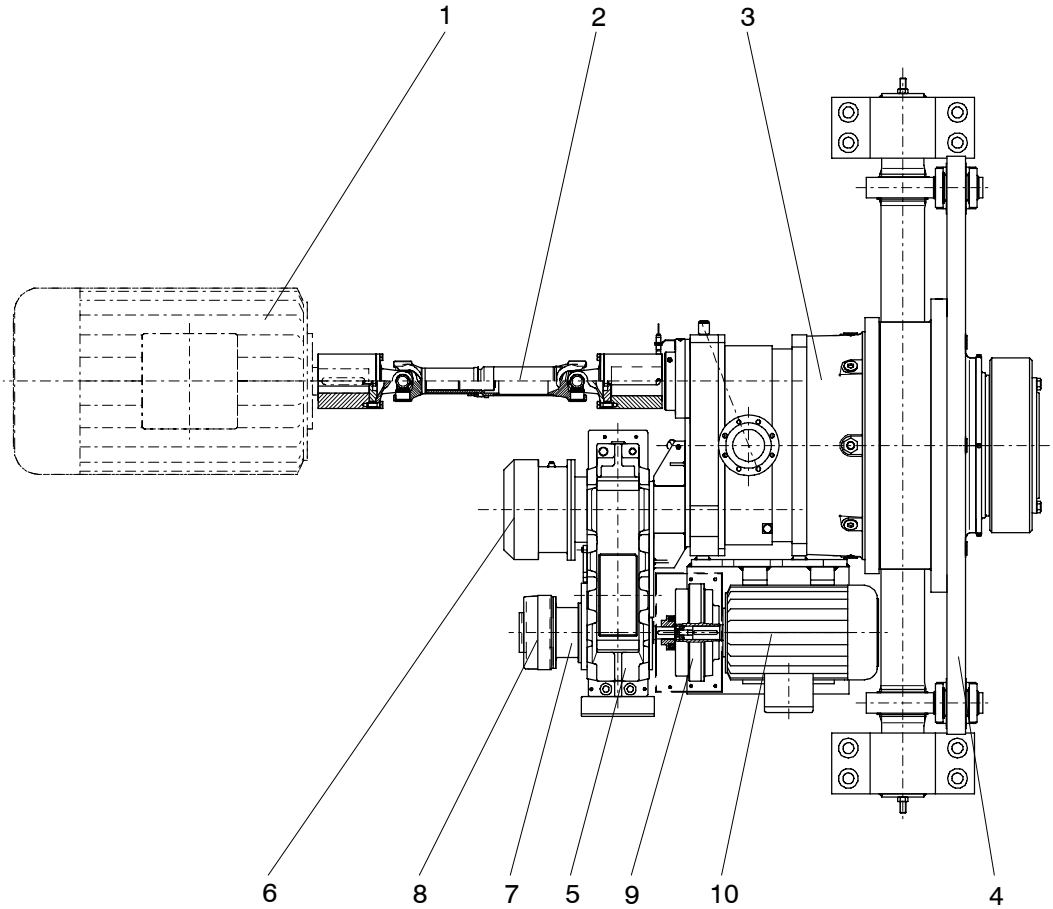

1	Main motor (not included in delivery)	6	Overrunning clutch
2	Cardan shaft	7	Centrifugal brake
3	Main gear unit	8	Blocking brake
4	Torque arm	9	Hydrodynamic starting clutch
5	Auxiliary gear unit	10	Auxiliary motor

For a detailed view of the gear unit, the drawings in the gear-unit documentation must be observed.

Diese technische Unterlage hat gesetzlichen Schutz (DIN 34)

2.1 Normal operation with the main motor

The drive torque generated by the main motor is transmitted through the cardan shaft to the main gear unit.

The main gear unit is mounted on the drive shaft with a shrink disk. The back torque is taken up by a double-sided torque arm.

After the main motor is switched off, the rotary furnace will try to rotate back to its centre-of-gravity position. Due to the reversal of the direction of rotation the overrunning clutch of the auxiliary gear unit acts. If the blocking brake is closed, it prevents the rotary furnace from rotating back. If the blocking brake is open, the centrifugal brake prevents the entire auxiliary drive from running at dangerous excessive speeds during the run-back operation.

Caution! **The centrifugal brake has an important safety function as a protection against excessive speeds. It must therefore be inspected twice yearly in accordance with the inspection and maintenance regulations.**

⚠ **The auxiliary drive may break apart violently as a result of a excessive speed. Ensure that the centrifugal brake always operates faultlessly.**

Caution! **Starting the main motor while the rotary furnace is moving back will irreparably damage the drive.**

Caution! **The rotary furnace drive must be interlocked so that only the main motor or the auxiliary motor can be started simultaneously. If the main motor and auxiliary motor are started simultaneously, parts of the drive unit may be irreparably damaged. A so-called ”flying start”, i.e. starting with the auxiliary drive first, then engaging the main drive and disengaging the auxiliary drive, is possible.**

In the case of dual drives the main motors must always be started simultaneously on both drive trains.

The blocking brake must be closed when the auxiliary motor is shut off and the main motor is running.

2.2 Operation with the auxiliary drive

A separate auxiliary drive is provided for slow running and maintenance work.

The drive torque generated by the auxiliary motor is transmitted to the input shaft of the auxiliary gear unit via a coupling.

The auxiliary gear unit steps down the drive speed.

The increased drive torque is conducted into the second input shaft of the main gear unit. The drive torque is further transmitted during operation with the main drive, but at a reduced speed.

Caution! **The rotary furnace drive must be interlocked so that only the main motor or the auxiliary motor can be started simultaneously. If the main motor and auxiliary motor are started simultaneously, parts of the drive unit may be irreparably damaged. A so-called ”flying start”, i.e. starting with the auxiliary drive first, then engaging the main drive and disengaging the auxiliary drive, is possible.**

Diese technische Unterlage hat gesetzlichen Schutz (DIN 34)

2.2.1 Starting clutch (for slow running)

The hydrodynamic starting clutch is protected against excessive operating temperatures by an electric warning device. When the set temperature is reached, the start of the auxiliary motor must be interrupted until the temperature has normalised.

Caution!

Hot oil may be sprayed from the hydrodynamic starting clutch. You may suffer very severe burns.
Keep a close watch on the electric warning device on the starting clutch.
The protective cover must always be fitted.

Further attempts at starting would raise the operating temperature still further and thus cause the safety fuse to operate.

The switching limit of the electric warning device must be set to at least 30 $$C below the actuating temperature of the safety fuse to protect the hydrodynamic starting clutch.

2.2.2 Auxiliary drive for slow running (e.g. during the cooling down phase/warming up phase)

Before starting the blocking brake must be closed or the rotary furnace have been oscillated into its centre-of-gravity position.

When the auxiliary motor is started, the blocking brake must, if necessary, be released (on hydrodynamic couplings with a time delay of 1 to 3 seconds).

If both auxiliary drives are needed on twin drives, the auxiliary motors must always be started on both drive trains at the same time or with a maximum delay of 1 to 3 seconds.

After the auxiliary motor is shut off, if the blocking brake is open, the rotary furnace begin to rotate back into its centre-of-gravity position because of the one-sided material filling of the furnace. Due to the reversal of the direction of rotation the overrunning clutch of the auxiliary gear unit acts. If the blocking brake is closed, it prevents the rotary furnace from rotating back. If the blocking brake is open, the centrifugal brake prevents the entire auxiliary drive from running at dangerous excessive speeds during the run-back operation.

⚠ **The auxiliary drive may break apart violently as a result of a excessive speed.**
Ensure that the centrifugal brake always operates faultlessly.

2.2.3 Maintenance operation (e.g. for lining work)

During maintenance work it is normally necessary to bring the rotary furnace into a certain position, hold it in an unstable position and start it in this unstable position.

When the auxiliary motor is started, the blocking brake must also be released (on hydrodynamic couplings with a time delay of 1 to 3 seconds).

In the case of stop (positioning), during maintenance work the blocking brake must be closed and the auxiliary motor stopped simultaneously.

If in the case of dual drives both auxiliary drives are required, the auxiliary drives must always be switched on simultaneously on both drive trains.

In the case of longer planned standstill, after conclusion of maintenance work the blocking brake should be opened and the rotary furnace allowed to rotate back into its centre-of-gravity position. The blocking brake can then be closed.

Diese technische Unterlage hat gesetzlichen Schutz (DIN 34)

Contents

1. General information on malfunctions 2

2. Possible faults 2

Diese technische Unterlage hat gesetzlichen Schutz (DIN 34)

1. General information on malfunctions

Note: Malfunctions occurring during the warranty period which necessitate repair of the gear unit may only be remedied by FLENDER service personnel.
Even after the warranty period has elapsed, we recommend our customers to consult our Service Division in respect of malfunctions whose cause cannot be clearly ascertained.

2. Possible faults

Malfunctions	Causes	Remedy
Main drive motor will not start up	Overload at output	Reduce load
	Motor of main drive defective	Repair or replace motor
	Wrong direction of the motor	Change poles of the motor
	Overrunning clutch is jammed	Install a new overrunning clutch
	Cage with grippers of the overrunning clutch improperly installed	Install cage of the overrunning clutch turned by 180°
Auxiliary drive motor will not start up	Overload at output	Reduce load
	Motor of the auxiliary drive unit is defective	Repair or replace motor
	Motor-Brake not lifted	Correct electrical connection of brake
Auxiliary drive motor starts up, but the output drive shaft of the gear unit does not rotate	Cage with clamping elements of overrunning clutch is incorrectly installed	Install cage offset 180°
	Direction of rotation of the motor is incorrect	Reverse polarity of motor
	Overrunning clutch defective	Install a new overrunning clutch
	Blocking brake not released	Adjust control circuit
Gear unit noise changed	Teeth damaged	Consult customer service. Check components with teeth and, if necessary, replace damaged components
	Bearing backlash increased	Consult customer service. Adjust bearing backlash.
	Faulty bearings	Consult customer service. Replace faulty bearings.
	Labyrinth rings rubbing	Readjust labyrinth rings

Diese technische Unterlage hat gesetzlichen Schutz (DIN 34)

Malfunctions	Causes	Remedy
Temperature rise at bearing points	Oil level in gear unit housing too low	Check oil level and, if necessary, top up oil
	Oil too old	Check when oil last changed and, if necessary, change oil. See Section 10.
	Faulty oil-supply system	Observe operating instructions for oil-supply system.
	Faulty bearings	Consult customer service. Check and, if necessary, replace bearings
Raised operating temperature	Oil level in gear unit housing too high	Check the oil level at room temperature, correct oil level if necessary
	Oil too old	Check when oil was last changed and, if necessary, change oil. See Section 10.
	Oil heavily contaminated	Change oil. See Section 10.
	Fault in oil-supply system	Observe operating instructions for oil-supply system.
	Gear units with fan: Intake opening in fan cowl and/or gear unit housing very dirty	Clean fan cowl and gear unit housing
Loud noises in area of gear unit fastenings	Gear unit fastening has loosened	Tighten screws/nuts with specified torque.Replace damaged screws/nuts.
Oil escaping from gear unit	Housing covers or parting surfaces inadequately sealed	Check and, if necessary, replace seals. Seal parting surfaces
	Faulty radial shaft sealing rings	Check and, if necessary, replace radial shaft sealing rings
Gear unit is oiled up	Housing covers or parting surfaces inadequately sealed	Check seals and, if necessary, seal parting surfaces
	Labyrinth seals oiled up	Check oil filling Clean labyrinths Change transporting position

Diese technische Unterlage hat gesetzlichen Schutz (DIN 34)

Malfunctions	Causes	Remedy
Oil foaming in lubricating oil sump	Water in oil	Examine oil for presence of water by test tube sampling. Have oil tested by chemistry laboratory.
Oil consumption too high	Housing covers or parting surfaces inadequately sealed Faulty radial shaft sealing rings Leaking pipework and connections Fault in oil-supply system	Check and, if necessary, replace seals. Seal parting surfaces Check and, if necessary, replace radial shaft sealing rings Leaking pipework and connections Observe operating instructions for oil-supply system
Fault in oil-supply system		Observe operating instructions for oil-supply system
Lubricating oil temperature too low	Gear unit has not warmed up while running Fault in oil-supply system	wait Observe operating instructions for oil-supply system

Diese technische Unterlage hat gesetzlichen Schutz (DIN 34)

Contents

1. General information on maintenance 2

2. Description of maintenance and repairs 3
2.1 Examining oil for water content 3
2.2 Carrying out oil changes 3
2.2.1 Top up oil 5
2.3 Re-charging Taconite seals with grease 5
2.4 Clean air filter 6
2.5 Cleaning fan, fan cowl and gear unit housing 6
2.6 Checking all fixing screws for tightness 7
2.7 Oil-supply unit 8
2.8 Gear unit inspection 8

3. Lubricants 8

Diese technische Unterlage hat gesetzlichen Schutz (DIN 34)

1. General information on maintenance

Note: All maintenance and repair work should be carried out with due care and only by thoroughly trained personnel.
The notes in Section 3 ”Safety notes” should be observed.

Caution! **The periods listed in Table 10.1 are largely dependent on the conditions of use of the gear unit. For this reason, it is only possible to state average periods which relate to a:**

daily operating time of	**24 hours**
duty factor of	**ED 100 %**
and a maximum oil temperature of	**90 °C** (mineral oil only) **100 °C** (synthetic oil only)

Note: With different operating conditions, the periods should be adjusted accordingly.

The part numbers (...) quoted in the following passages correspond to those in the assembly drawing (see section 1 ”Technical Data”).

Measures	Periods	Remarks
Check oil temperature	daily	
Check gear unit noise for changes	daily	
Check oil level	monthly	Oil level at the top mark on the dipstick
Check gear unit for leakage	monthly	
Check oil for water content	after approx. 400 op.hrs/ at least once a year	see 2.1
Initial oil change after startup	after approx. 400 op.hrs	see 2.2
Subsequent oil changes	every 18 months or 5000 op.hrs 1)	see 2.2
Re-charging Taconite seals with grease	Every 3000 service hours, every 6 months at least	See 2.3
Clean air filter	Every 3 months	See 2.4
Clean fan, cowl and gear unit housing	at same time as oil change	see 2.5
Check all fixing screws for tightness	after 1st oil change, then after every 2nd oil change	see 2.6
Carry out complete inspection of gear unit	approx. every 2 years when oil change due	see 2.8

Table 10.1: Maintenance and repairs

Note: The periods should be adjusted as required under different operating conditions.

1) when using synthetic oils the periods can be tripled.

Diese technische Unterlage hat gesetzlichen Schutz (DIN 34)

2. Description of maintenance and repairs

2.1 Examining oil for water content

Detailed information on examining the oil for water content can be obtained from your lubricant manufacturer.

2.2 Carrying out oil changes

Caution! **When changing the oil the gear unit should <u>always</u> be filled with the <u>oil grade previously in use!</u> Mixing oils of different grades or makes is NOT permissible. In particular, synthetic oils may not be mixed with mineral oils or different synthetic oils. When changing over from mineral oil to synthetic oil or from synthetic oil with a particular base to synthetic oil with another base, the gear unit must be flushed through thoroughly with the new oil grade.**

When changing the oil, the housing must also be cleaned thoroughly by flushing with oil to remove oil sludge, abraded particles and residues of old oil. For this purpose, the same oil grade should be used as is in use for operation of the gear unit. Viscous oils should be warmed beforehand. Only when all residues have been removed, may the fresh oil be poured in.

Note: The oil should be drained off, while the gear unit is still warm, after shutdown.

- Shut down gear unit by shutting off the drive unit

⚠ **Secure drive unit to prevent accidental startup.**
Affix notice at the switch-on point.

- Close shut-off valves in the cooling water inlet and outlet lines (in the case of gear unit with oil cooling system)
- Place a suitable collection receptacle under the oil drain plug of the gear unit housing
- Unscrew the breather on the top of the housing
- Unscrew oil drain plug and drain oil off into the receptacle

Note: Dispose of used oil in accordance with environmental regulations.

⚠ **There is a risk of scalding from the hot oil emerging.**
Wear protective gloves.

- Thoroughly clean the permanent magnet of the oil drain plug
- Screw in oil drain plug

Note: Check condition of seal washer (the seal washer is vulcanized onto the oil drain plug); use new oil drain plug if necessary.

- Loosen the oil-inlet screw

Caution! **Fill gear unit up with fresh oil using a filling filter (max. filter coarseness 25 µm).**

Diese technische Unterlage hat gesetzlichen Schutz (DIN 34)

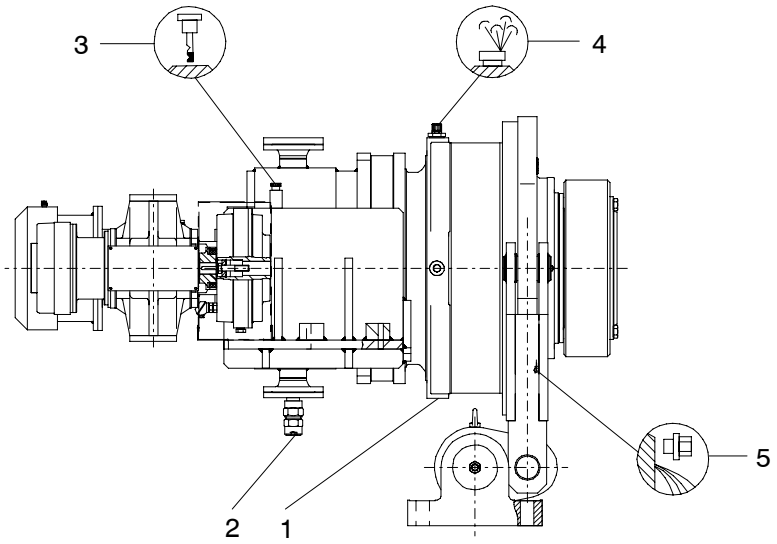

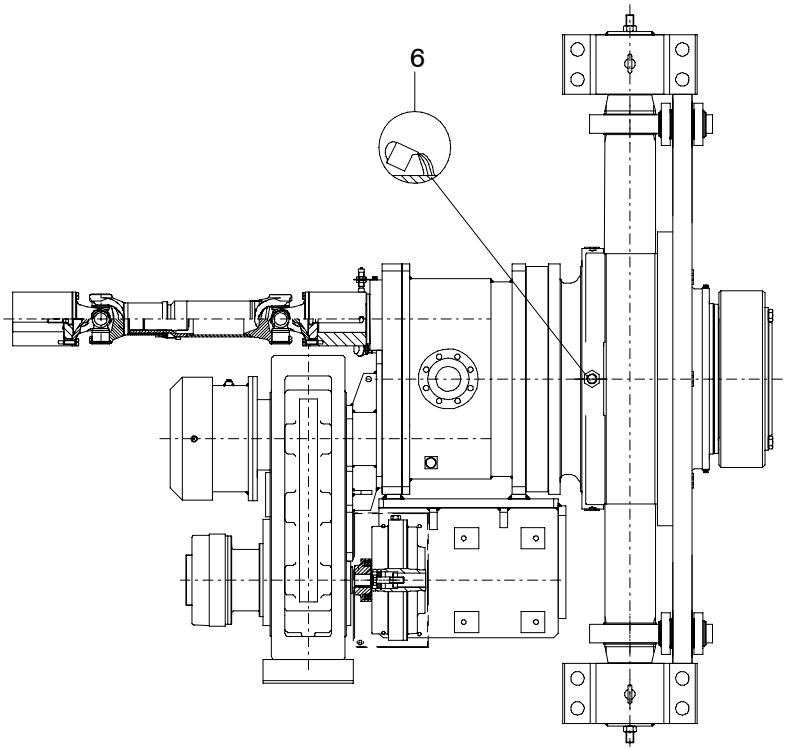

1	Connection for suction pipe	4	Air filter
2	Connection for pressure pipe	5	Oil drain plug
3	Dipstick	6	Oil filler plug

For exact details of the gear unit, refer to the drawings in the gear-unit documentation.

Diese technische Unterlage hat gesetzlichen Schutz (DIN 34)

Note: The oil to be used will be found in Section 12 ”Appendix”.
Data, such as oil grade, oil viscosity and quantity of oil required should be taken from the rating plate (see Section 1 ”Technical Data”).

- Check oil level with the dipstick.

Note: The oil level should be at the top mark on the dipstick.

Caution! **Any oil escaping should be removed immediately with oil binding agent.**
The oil must not come into contact with skin (e.g. hands of the operating personnel).
The safety instructions on the data sheets of the used oil should be observed.

- Close oil inlet

2.2.1 Top up oil

- Shut gear unit down and measure oil level with dipstick

Note: The oil level should be at the top mark on the dipstick.

- Open the oil inlet screw

Caution! **Fill gear unit up with fresh oil using a filling filter (max. filter coarseness 25 µm).**

Note: Use only the oil grade previously in use (see also 2.2).
Data, such as oil grade, oil viscosity and quantity of oil required should be taken from the rating plate (see Section 1. ”Technical data”).

- Check oil level with the dipstick.

Note: The oil level should be at the top mark on the dipstick.

Caution! **Any oil escaping should be removed immediately with oil binding agent.**
The oil must not come into contact with skin (e.g. hands of the operating personnel).
The safety instructions on the data sheets of the used oil should be observed.

- Close oil inlet

2.3 Re-charging Taconite seals with grease

- Shut down gear unit by shutting off the drive unit

⚠ **Secure drive unit to prevent accidental startup.**
Affix notice at the switch-on point.

- Inject approx. 30 g lithium-based bearing grease into each of the lubrication points of the Taconite seal. The lubrication points are fitted with flat grease nipples type AM10x1 to DIN 3404.

⚠ **Remove and dispose of any old grease emerging from the seals.**

Diese technische Unterlage hat gesetzlichen Schutz (DIN 34)

2.4 Clean air filter

- Shut down gear unit by shutting off the drive unit

Secure drive unit to prevent accidental startup.
Affix notice at the switch-on point.

The air filter must be cleaned whenever it is coated or clogged with dust, i.e. every oil change at the latest. To do this, unscrew the air filter, wash it with benzene or a similar cleaning agent, and allow it to dry. It can also be cleaned with compressed air.

Caution! **The safety instructions on the data sheets of the used cleaning agent should be observed!**

2.5 Cleaning fan, fan cowl and gear unit housing

- Shut down gear unit by shutting off the drive unit

Secure drive unit to prevent accidental startup.
Affix notice at the switch-on point.

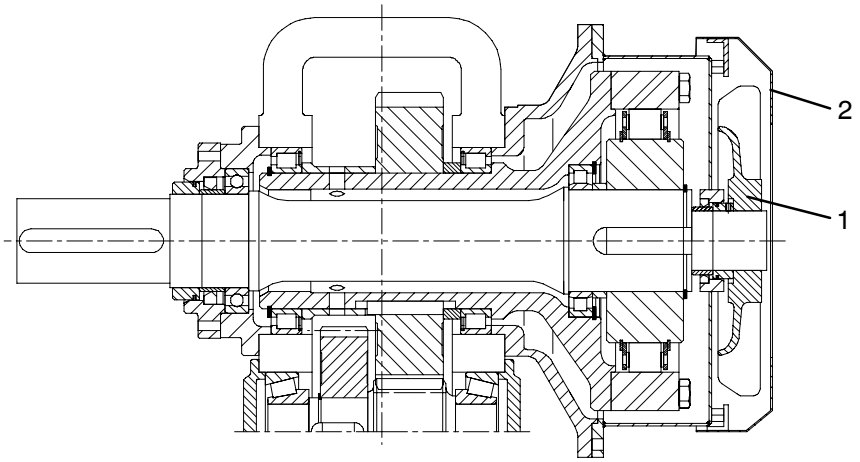

1 Fan 2 Fan cowl

Detailed illustrations of the gear unit will be found in the drawings in the gear unit documentation.

- Remove fan cowl
- Clean the fan cowl, fan wheel and housing ribs. If dirt is encrusted, use a brush and suitable cleaning fluid.
- Clean off any corrosion
- Screw the fan cowl into position

Caution! **Cleaning the gear unit with a high-pressure cleaning device is not permissible.**

Diese technische Unterlage hat gesetzlichen Schutz (DIN 34)

2.6 Checking all fixing screws for tightness

- Shut down gear unit by shutting off the drive unit

Secure drive unit to prevent accidental startup.
Affix notice at the switch-on point.

- Close shut-off valves in the cooling water inlet and outlet lines (in the case of gear unit with oil cooling system)
- Check all fixing screws for tightness with a torque wrench.

Thread size	Strength class	Tightening torque (with μ = 0.14)
M 6	8.8	10 Nm
M 8	8.8	25 Nm
M 10	8.8	49 Nm
M 12	8.8	86 Nm
M 16	8.8	210 Nm
M 20	8.8	410 Nm
M 24	8.8	710 Nm
M 30	8.8	1450 Nm
M 36	8.8	2530 Nm
M 42	8.8	4070 Nm
M 48	8.8	6140 Nm
M 56	8.8	9840 Nm

Thread size	Strength class	Tightening torque (with μ = 0.14)
M 6	10.9	14 Nm
M 8	10.9	35 Nm
M 10	10.9	69 Nm
M 12	10.9	120 Nm
M 16	10.9	295 Nm
M 20	10.9	580 Nm
M 24	10.9	1000 Nm
M 30	10.9	2000 Nm
M 36	10.9	3560 Nm
M 42	10.9	5720 Nm
M 48	10.9	8640 Nm
M 56	10.9	13850 Nm

Table 10.2: Tightening torques

Note: Unserviceable screws should be replaced by fresh ones of the same property class and type.

Diese technische Unterlage hat gesetzlichen Schutz (DIN 34)

2.7 Oil-supply unit

See specific instructions for oil-supply unit.

2.8 Gear unit inspection

The gear unit inspection should be entrusted to our Service Division, as by virtue of their experience, our technicians can most reliably assess whether and which parts of the gear unit must be replaced.

3. Lubricants

For lubricants, please refer to Section 12 ”Appendix”.

Diese technische Unterlage hat gesetzlichen Schutz (DIN 34)

Contents

1. **Spare parts stock** 2

2. **Addresses of replacement part suppliers and service organizations** 2

Diese technische Unterlage hat gesetzlichen Schutz (DIN 34)

1. Spare parts stock

A stock of the most important replacement and wearing parts is essential for satisfactory operation and serviceability of the gear unit at all times.

Please use the Spare Parts List for ordering spare parts.

For further information, see the Spare Parts Drawing contained in the Spare Parts List.

Only original replacement parts supplied by us are covered by our warranty.

Caution!

Attention is drawn expressly to the fact that replacement parts and accessories not supplied by us have not been tested or approved by us. Installation and/or use of such products can therefore under certain circumstances alter the structurally specified properties of the gear unit and can as a result impair active and/or passive safety. FLENDER accept no liability of any sort for damage caused by the use of replacement parts and accessories which are not original Flender; their use will invalidate our warranty in every respect.

Please note that special production and supply specifications frequently exist for individual components and that we always supply replacement parts in accordance with the state of the art and the latest legal requirements.

The following data should be stated when ordering replacement parts:

Order No.

Part No.

Quantity

2. Addresses of replacement part suppliers and service organizations

Please use the addresses listed below when ordering replacement parts or requesting a service fitter, please refer to Section 12 ”Appendix”.

Diese technische Unterlage hat gesetzlichen Schutz (DIN 34)

Operating Instructions

BA 7300 EN 01.05

Recommended Lubricants

ADDINOL	ANDEROL® Specialty Lubricants	ARAL	AVIA	BECHEM	BEL-RAY TOTAL PERFORMANCE LUBRICANTS
bp	Brugarolas	B&L	Castrol	CEPSA	cognis
DELTA OIL	Esso	FAG	FLENDER	FRAGOL	FUCHS
FUCHS LUBRITECH	galp energia	KLÖBER LUBRICATION	LE	MEGUIN OILS OF GERMANY	Mobil
MOTOREX	OMV	ORLEN OIL	Petrol Ofisi	Q8	Shell
SRS	STATOIL	TEXACO	TOTAL	SNAP	VECO
Verkol Lubricantes					

FLENDER

A. Friedr. Flender AG · 46393 Bocholt · Tel. 02871/92-0 · Telefax 02871/92-2596 · www.flender.com

Contents

1.	**Lubricants for gear units**	**3**
1.1	Required quality of gear oils	3
1.1.1	Oil groups	4
1.1.2	Oil temperatures	4
1.1.3	General oil service lives	4
1.1.4	Oil change	4
	Table A : Lubricating oils for FLENDER helical-gear, bevel helical-gear and planetary-gear units	5
	Table B : Lubricating oils for FLENDER worm-gear units	14
	Table C : Lubricating oils for FLENDER gear motors	18
1.2	Lubricating greases for gear units and rolling bearings	23
	Table D : Lubricating greases for FLENDER gear units and rolling bearings	23
2.	**Lubricants for ZAPEX couplings**	**25**
2.1	Required oil and grease quality	25
2.1.1	Oil and grease types	25
2.1.2	Oil and grease change	25
	Table E : Lubricating oils and lubricating greases for FLENDER ZAPEX couplings	26

1. Lubricants for gear units

Caution!

This lubricant recommendation does not apply to WINERGY AG gear units.

For **axle drives, marine gearboxes and turbo gear units** also special lubricant recommendations apply.

According to manufacturer's information the gear oils listed in these operating instructions are manufactured and supplied **world-wide** in the above-mentioned quality as required by FLENDER (Exceptions: Observe footnotes in the following tables).

1.1 Required quality of gear oils

For FLENDER gear units, only CLP-quality oils containing active agents to DIN 51 517-3 for increasing corrosion protection and resistance to ageing and for reducing wear in mixed-friction areas are approved. The scuffing resistance in the FZG test to DIN 51354-2 must comply with stage 12 or higher under A/8,3/90 test conditions. In the FE-8 rolling bearing test to DIN 51 819-3 rolling element wear must be under 30 mg and cage wear under 100 mg under test conditions D-7,5/80-80.

In addition, the gear oils must meet the following quality requirements demanded by FLENDER:

- Sufficiently high grey-staining resistance in accordance with FVA 54 grey-staining test
  a) for helical-gear, bevel-gear and planetary-gear units in table A, GS-criteria stage 10 or higher applies, and high grey-staining resistance GST = high
  b) for all other gear units in tables B and C, GS-criteria stage 9 or higher applies
- Low degree of foaming with less than 15 % foam formation in the FLENDER foam test
- Compatibility with elastomer materials of the radial shaft-sealing rings applied in FLENDER gear units
- Compatibility with residues of corrosion-protection agent and run-in oils used by FLENDER
- Compatibility with the paints used by FLENDER in its gear-unit interiors
- Compatibility with liquid seals between bolted-joint surfaces.

For use in worm-gear units moreover:

- Low wear, high pitting resistance and high efficiency (low temperature) in the cylindrical worm-gear unit test

Note: The use of gear oils which do not comply with the above quality requirements invalidate the FLENDER product guarantee obligation. Please note that every oil manufacturer or supplier is responsible for the quality of his product.

Always select the gear oil in accordance with the oil group and viscosity class indicated on the rating plate on the gear unit. If a different viscosity is selected, or oil of a type other than those recommended in these instructions, the operator assumes the responsibility for its technical suitability. In order to minimise the technical risk in such a case, the oil applied must be at least CLP oil quality to DIN 51 517-3, which should be confirmed by the oil manufacturer.

Caution!

The oil group and oil viscosity indicated on the rating plates as well as the instructions in the gear-unit operating instructions must be adhered to.

Deviations are permitted only after consultation with FLENDER!

1.1.1 Oil groups

In tables A, B and C five oil groups are distinguished:

- Mineral oils (MIN oil)
- Polyglycol (PG oil)
- Poly-α olefin (PAO oil)
- Biologically degradable oils (BIO oil)
- Physiologically safe oils approved in accordance with USDA H1 (PHY oil).

1.1.2 Oil temperatures

The synthetic oils have a wider temperature range and a higher viscosity index (i.e. a flatter viscosity-temperature gradient) than the mineral oils. Guideline values for temperature range:

mineral oils approx. –10 °C to +90 °C (short term +100 °C);
polyglycols and poly-α olefins approx. –20 °C to +100 °C (short term +110 °C);
bio-degradable oils (synthetic Ester) approx. –15 to +90 °C.

Note: The upper and lower operating temperatures of certain gear oils may deviate widely from the values indicated. For operating conditions outside the above mentioned temperature ranges, the flash point and pour point of the oils must be observed. For these and other data and properties of the gear oils, refer to the oil manufacturers' technical data sheets (to this purpose Flender must be consulted).

1.1.3 General oil service lives

According to the manufacturers, the following are the minimum periods during which the oils can be used without undergoing any significant change in quality. They are calculated on the basis of an average oil temperature of 80 °C:

– mineral oils, bio-degradable oils and physiologically safe oils: 2 years or 10 000 hours of service

– for poly-α olefins and polyglycols: 4 years or 20 000 hours of service.

Note: The actual service lives may be higher or lower (for temperatures over 80 °C). The general rule is that an increase in temperature of 10 K will halve the service life.

1.1.4 Oil change

The degree of purity of the oil affects the operating reliability and life span of the oil and the gear unit. It should therefore be ensured that the oil in the gear unit is clean. For the first oil change after start-up and for subsequent oil changes, the specifications in the gear-unit operating instructions must be observed. In the case of larger oil quantities, an analysis should be carried out before cleaning or changing the oil.

When changing oil of the same type, the quantity of oil remaining in the gear unit should be kept as low as possible. Generally speaking, a small remaining quantity will cause no particular problems. Gear oils of different types and manufacturers must not be mixed. If necessary, the manufacturer should confirm that the new oil is compatible with residues of the old oil. When changing to very different types of oil or oils with very different additives, especially when changing from polyglycols to another gear oil or vice versa, the gear unit must always be well flushed out with the new oil. Residues of old oil must be completely removed from the gear unit.

Caution! **Gear oils must never be mixed with other substances. Flushing with paraffin or other solvents is not permitted, as traces of these substances always remain inside the unit.**

Table A Lubricant	Code no.	Viscosity ISO-VG DIN 51519 at 40 °C (mm^2/s)	Lubricating oils for FLENDER helical-gear, bevel helical-gear and planetary-gear units			
			ADDINOL	ANDEROL® Specialty Lubricants	ARAL	AVIA
Mineral oils (MIN oil)	A11	VG 1000				
	A12	VG 680	CLP 680 S ECO GEAR 680 M		Degol BG 680 Plus Degol BMB 680 1)	GEAR RSX 680
	A13	VG 460	CLP 460 S ECO GEAR 460 M		Degol BG 460 Plus Degol BMB 460 1)	GEAR RSX 460
	A14	VG 320	CLP 320 S ECO GEAR 320 M		Degol BG 320 Plus Degol BMB 320 1)	GEAR RSX 320
	A15	VG 220	CLP 220 S ECO GEAR 220 M		Degol BG 220 Plus Degol BMB 220 1)	GEAR RSX 220
	A16	VG 150	CLP 150 S ECO GEAR 150 M		Degol BG 150 Plus Degol BMB 150 1)	GEAR RSX 150
	A17	VG 100	ECO GEAR 100 M		Degol BG 100 Plus Degol BMB 100 1)	GEAR RSX 100
Polyglycol (PG oil)	A21	VG 1000			Degol GS 1000	
	A22	VG 680			Degol GS 680	GEAR VSG 680
	A23	VG 460			Degol GS 460	GEAR VSG 460
	A24	VG 320			Degol GS 320	GEAR VSG 320
	A25	VG 220			Degol GS 220	GEAR VSG 220
	A26	VG 150			Degol GS 150	GEAR VSG 150
	A27	VG 100				GEAR VSG 100
Poly-α-olefin (PAO oil)	A31	VG 1000		4111 XEP 5999 XEP		SYNTOGEAR PE 1000
	A32	VG 680	ECO GEAR 680 S	4680 XEP 5680 XEP		SYNTOGEAR PE 680 EVOGEAR SX 680
	A33	VG 460	ECO GEAR 460 S	4460 XEP 5460 XEP	Degol PAS 460	SYNTOGEAR PE 460 EVOGEAR SX 460
	A34	VG 320	ECO GEAR 320 S	4320 XEP 5320 XEP	Degol PAS 320	SYNTOGEAR PE 320 EVOGEAR SX 320
	A35	VG 220	ECO GEAR 220 S	4220 XEP 5220 XEP	Degol PAS 220	SYNTOGEAR PE 220 EVOGEAR SX 220
	A36	VG 150	ECO GEAR 150 S	4150 XEP 5150 XEP	Degol PAS 150	SYNTOGEAR PE 150
	A37	VG 100	ECO GEAR 100 S	4100 XEP		SYNTOGEAR PE 100
Biologically degradable oils (BIO oil)	A41	VG 1000				
	A42	VG 680				
	A43	VG 460				
	A44	VG 320				
	A45	VG 220				
	A46	VG 150				
	A47	VG 100				
Physiologically safe oils (PHY oil)	A51	VG 1000				
	A52	VG 680				
	A53	VG 460				
	A54	VG 320				
	A55	VG 220				
	A56	VG 150				
	A57	VG 100				

1) with solid content MoS_2

Table A Lubricant	Code no.	Viscosity ISO-VG DIN 51519 at 40 °C (mm^2/s)	Lubricating oils for FLENDER helical-gear, bevel helical-gear and planetary-gear units			
			BECHEM	BEL-RAY TOTAL PERFORMANCE LUBRICANTS	bp	Brugarolas
Mineral oils (MIN oil)	A11	VG 1000				Beslux Gear XP 1000
	A12	VG 680			Energol GR-XF 680	Beslux Gear XP 680
	A13	VG 460			Energol GR-XF 460	Beslux Gear XP 460
	A14	VG 320			Energol GR-XF 320	Beslux Gear XP 320
	A15	VG 220			Energol GR-XF 220	Beslux Gear XP 220
	A16	VG 150			Energol GR-XF 150	
	A17	VG 100				
Polyglycol (PG oil)	A21	VG 1000				Beslux Sincart W 1000
	A22	VG 680	BERUSYNTH EP 680		Enersyn SG-XP 680	Beslux Sincart W 680
	A23	VG 460	BERUSYNTH EP 460		Enersyn SG-XP 460	Beslux Sincart W 460
	A24	VG 320	BERUSYNTH EP 320		Enersyn SG-XP 320	Beslux Sincart W 320
	A25	VG 220	BERUSYNTH EP 220		Enersyn SG-XP 220	Beslux Sincart W 220
	A26	VG 150	BERUSYNTH EP 150		Enersyn SG-XP 150	Beslux Sincart W 150
	A27	VG 100	BERUSYNTH EP 100		Enersyn SG-XP 100	
Poly-α-olefin (PAO oil)	A31	VG 1000		Bel-Ray Synth. Gear Oil 6698		Beslux Gearsint XP 1000
	A32	VG 680		Bel-Ray Synth. Gear Oil 6696		Beslux Gearsint XP 680
	A33	VG 460		Bel-Ray Synth. Gear Oil 6694	Enersyn EP-XF 460	Beslux Gearsint XP 460
	A34	VG 320		Bel-Ray Synth. Gear Oil 6692	Enersyn EP-XF 320	Beslux Gearsint XP 320
	A35	VG 220		Bel-Ray Synth. Gear Oil 6690	Enersyn EP-XF 220	Beslux Gearsint XP 220
	A36	VG 150		Bel-Ray Synth. Gear Oil 6688	Enersyn EP-XF 150	Beslux Gearsint XP 150
	A37	VG 100			Enersyn EP-XF 100	
Biologically degradable oils (BIO oil)	A41	VG 1000				
	A42	VG 680				
	A43	VG 460				
	A44	VG 320				
	A45	VG 220				
	A46	VG 150				
	A47	VG 100				
Physiologically safe oils (PHY oil)	A51	VG 1000				
	A52	VG 680				
	A53	VG 460				
	A54	VG 320				
	A55	VG 220				
	A56	VG 150				
	A57	VG 100				

Table A Lubricant	Code no.	Viscosity ISO-VG DIN 51519 at 40 °C (mm^2/s)	Lubricating oils for FLENDER helical-gear, bevel helical-gear and planetary-gear units			
			B&L	Castrol classic	Castrol performance	CEPSA
Mineral oils (MIN oil)	A11	VG 1000		Alpha SP 1000	Optigear BM 1000 Tribol 1100 / 1000	CEPSA AEROGEAR 1000
	A12	VG 680		Alpha SP 680	Optigear BM 680 Tribol 1100 / 680	CEPSA AEROGEAR 680
	A13	VG 460		Alpha SP 460 Alpha MAX 460	Optigear BM 460 Tribol 1100 / 460	CEPSA AEROGEAR 460
	A14	VG 320		Alpha SP 320 Alpha MAX 320	Optigear BM 320 Tribol 1100 / 320	CEPSA AEROGEAR 320
	A15	VG 220		Alpha SP 220 Alpha MAX 220	Optigear BM 220 Tribol 1100 / 220	CEPSA AEROGEAR 220
	A16	VG 150		Alpha SP 150 Alpha MAX 150	Optigear BM 150 Tribol 1100 / 150	
	A17	VG 100		Alpha SP 100 Alpha MAX 100	Optigear BM 100 Tribol 1100 / 100	
Polyglycol (PG oil)	A21	VG 1000			Tribol 800 / 1000	
	A22	VG 680			Tribol 800 / 680	
	A23	VG 460			Tribol 800 / 460	
	A24	VG 320			Tribol 800 / 320	
	A25	VG 220			Tribol 800 / 220	
	A26	VG 150			Tribol 800 / 150	
	A27	VG 100			Tribol 800 / 100	
Poly-α-olefin (PAO oil)	A31	VG 1000				
	A32	VG 680		Alphasyn EP 680		AEROGEAR SYNT 680
	A33	VG 460		Optigear Synth. A 460 Alphasyn EP 460	Optigear Synth. X 460 Tribol 1710 / 460	AEROGEAR SYNT 460
	A34	VG 320		Optigear Synth. A 320 Alphasyn EP 320	Optigear Synth. X 320 Tribol 1710 / 320	AEROGEAR SYNT 320
	A35	VG 220		Optigear Synth. A 220 Alphasyn EP 220	Optigear Synth. X 220 Tribol 1710 / 220	AEROGEAR SYNT 220
	A36	VG 150		Alphasyn EP 150		
	A37	VG 100				
Biologically degradable oils (BIO oil)	A41	VG 1000				
	A42	VG 680	RIVOLTA S.G.L. 680			
	A43	VG 460			Tribol BioTop 1418 / 460	
	A44	VG 320	RIVOLTA S.G.L. 320		Tribol BioTop 1418 / 320	
	A45	VG 220	RIVOLTA S.G.L. 220		Tribol BioTop 1418 / 220	
	A46	VG 150			Tribol BioTop 1418 / 150	
	A47	VG 100	RIVOLTA S.G.L. 100			
Physiologically safe oils (PHY oil)	A51	VG 1000				
	A52	VG 680			Optileb GT 680	
	A53	VG 460			Optileb GT 460	
	A54	VG 320			Optileb GT 320	
	A55	VG 220			Optileb GT 220	
	A56	VG 150			Optileb GT 150	
	A57	VG 100			Optileb GT 100	

Table A			Lubricating oils for FLENDER helical-gear, bevel helical-gear and planetary-gear units			
Lubricant	Code no.	**Viscosity** ISO-VG DIN 51519 at 40 °C (mm^2/s)	cognis	DELTA OIL	Esso	FUCHS
Mineral oils (MIN oil)	A11	VG 1000				RENOLIN CLP1000 PLUS
	A12	VG 680			SPARTAN EP 680 3)	RENOLIN CLP 680 / RENOLIN CLP 680 PLUS
	A13	VG 460		EP Industrial G 460	SPARTAN EP 460 3)	RENOLIN CLP 460 / RENOLIN CLP 460 PLUS
	A14	VG 320		EP Industrial G 320	SPARTAN EP 320 3)	RENOLIN CLP 320 / RENOLIN CLP 320 PLUS
	A15	VG 220		EP Industrial G 220	SPARTAN EP 220 3)	RENOLIN CLP 220 / RENOLIN CLP 220 PLUS
	A16	VG 150			SPARTAN EP 150 3)	RENOLIN CLP 150 / RENOLIN CLP 150 PLUS
	A17	VG 100			SPARTAN EP 100 3)	RENOLIN CLP 100 / RENOLIN CLP 100 PLUS
Polyglycol (PG oil)	A21	VG 1000	Breox SL 1000			RENOLIN PG 1000
	A22	VG 680	Breox SL 680			RENOLIN PG 680
	A23	VG 460	Breox SL 460			RENOLIN PG 460
	A24	VG 320	Breox SL 320			RENOLIN PG 320
	A25	VG 220	Breox SL 220			RENOLIN PG 220
	A26	VG 150	Breox SL 150			RENOLIN PG 150
	A27	VG 100				RENOLIN PG 100
Poly-α-olefin (PAO oil)	A31	VG 1000				
	A32	VG 680				RENOLIN UNISYN CLP 680
	A33	VG 460				RENOLIN UNISYN CLP 460
	A34	VG 320				RENOLIN UNISYN CLP 320
	A35	VG 220				RENOLIN UNISYN CLP 220
	A36	VG 150				RENOLIN UNISYN CLP 150
	A37	VG 100				RENOLIN UNISYN CLP 100
Biologically degradable oils (BIO oil)	A41	VG 1000				PLANTOGEAR 1000 S
	A42	VG 680				PLANTOGEAR 680 S
	A43	VG 460				PLANTOGEAR 460 S
	A44	VG 320				PLANTOGEAR 320 S
	A45	VG 220				PLANTOGEAR 220 S
	A46	VG 150				PLANTOGEAR 150 S
	A47	VG 100				PLANTOGEAR 100 S
Physiologically safe oils (PHY oil)	A51	VG 1000	Breox FGL 1000 2)			
	A52	VG 680	Breox FGL 680 2)			
	A53	VG 460	Breox FGL 460 2)			
	A54	VG 320	Breox FGL 320 2)			
	A55	VG 220	Breox FGL 220 2)			
	A56	VG 150	Breox FGL 150 2)			
	A57	VG 100				

2) PG oil
3) ESSO guarantees the qualities required by FLENDER only for products from Europe

Table A			Lubricating oils for FLENDER helical-gear, bevel helical-gear and planetary-gear units			
Lubricant	Code no.	**Viscosity** ISO-VG DIN 51519 at 40 °C (mm^2/s)	FUCHS LUBRITECH	FRAGOL	galp energia	KLÜBER LUBRICATION
Mineral oils (MIN oil)	A11	VG 1000	GEARMASTER CLP 1000			
	A12	VG 680	GEARMASTER CLP 680			Klüberoil GEM 1 - 680 N
	A13	VG 460	GEARMASTER CLP 460			Klüberoil GEM 1 - 460 N
	A14	VG 320	GEARMASTER CLP 320			Klüberoil GEM 1 - 320 N
	A15	VG 220	GEARMASTER CLP 220			Klüberoil GEM 1 - 220 N
	A16	VG 150	GEARMASTER CLP 150			Klüberoil GEM 1 - 150 N
	A17	VG 100	GEARMASTER CLP 100			Klüberoil GEM 1 - 100 N
Polyglycol (PG oil)	A21	VG 1000	GEARMASTER PGP 1000	Ucolub BSL-IG 1000		Klübersynth. GH 6 - 1000
	A22	VG 680	GEARMASTER PGP 680	Ucolub BSL-IG 680		Klübersynth. GH 6 - 680
	A23	VG 460	GEARMASTER PGP 460	Ucolub BSL-IG 460		Klübersynth. GH 6 - 460
	A24	VG 320	GEARMASTER PGP 320	Ucolub BSL-IG 320		Klübersynth. GH 6 - 320
	A25	VG 220	GEARMASTER PGP 220	Ucolub BSL-IG 220		Klübersynth. GH 6 - 220
	A26	VG 150	GEARMASTER PGP 150	Ucolub BSL-IG 150		Klübersynth. GH 6 - 150
	A27	VG 100	GEARMASTER PGP 100	Ucolub BSL-IG 100		
Poly-α-olefin (PAO oil)	A31	VG 1000	GEARMASTER SYN 1000			
	A32	VG 680	GEARMASTER SYN 680			Klübersynth. GEM 4 - 680 N
	A33	VG 460	GEARMASTER SYN 460	Ucolub N-PA 460	Galp Transgear SMP 460	Klübersynth. GEM 4 - 460 N
	A34	VG 320	GEARMASTER SYN 320	Ucolub N-PA 320	Galp Transgear SMP 320	Klübersynth. GEM 4 - 320 N
	A35	VG 220	GEARMASTER SYN 220	Ucolub N-PA 220	Galp Transgear SMP 220	Klübersynth. GEM 4 - 220 N
	A36	VG 150	GEARMASTER SYN 150		Galp Transgear SMP 150	Klübersynth. GEM 4 - 150 N
	A37	VG 100	GEARMASTER SYN 100			
Biologically degradable oils (BIO oil)	A41	VG 1000	GEARMASTER ECO 1000			
	A42	VG 680	GEARMASTER ECO 680			
	A43	VG 460	GEARMASTER ECO 460			
	A44	VG 320	GEARMASTER ECO 320			Klübersynth. GEM 2 - 320
	A45	VG 220	GEARMASTER ECO 220			Klübersynth. GEM 2 - 220
	A46	VG 150	GEARMASTER ECO 150			
	A47	VG 100	GEARMASTER ECO 100			
Physiologically safe oils (PHY oil)	A51	VG 1000		Ucolub BSL 1000 4)		
	A52	VG 680		Ucolub BSL 680 4)		
	A53	VG 460		Ucolub BSL 460 4)		
	A54	VG 320		Ucolub BSL 320 4)		
	A55	VG 220		Ucolub BSL 220 4)		
	A56	VG 150		Ucolub BSL 150 4)		
	A57	VG 100				

4) PG oil

Table A Lubricant	Code no.	Viscosity ISO-VG DIN 51519 at 40 °C (mm^2/s)	Lubricating oils for FLENDER helical-gear, bevel helical-gear and planetary-gear units			
				MEGUIN OILS OF GERMANY	Mobil	MOTOREX
Mineral oils (MIN oil)	A11	VG 1000				GEAR COMPOUND PLUS 1000
	A12	VG 680	609 ALMASOL Vari-Purpose Gear Lubricant		Mobilgear XMP 680	GEAR COMPOUND PLUS 680
	A13	VG 460	608 ALMASOL Vari-Purpose Gear Lubricant		Mobilgear XMP 460	GEAR COMPOUND PLUS 460
	A14	VG 320	605 ALMASOL Vari-Purpose Gear Lubricant		Mobilgear XMP 320	GEAR COMPOUND PLUS 320
	A15	VG 220	607 ALMASOL Vari-Purpose Gear Lubricant		Mobilgear XMP 220	GEAR COMPOUND PLUS 220
	A16	VG 150	604 ALMASOL Vari-Purpose Gear Lubricant		Mobilgear XMP 150	GEAR COMPOUND PLUS 150
	A17	VG 100	606 ALMASOL Vari-Purpose Gear Lubricant		Mobilgear XMP 100	GEAR COMPOUND PLUS 100
Polyglycol (PG oil)	A21	VG 1000				
	A22	VG 680				
	A23	VG 460				
	A24	VG 320				
	A25	VG 220				
	A26	VG 150				
	A27	VG 100				
Poly-α-olefin (PAO oil)	A31	VG 1000			Mobil SHC 639	GEAR SINTEC CLP 1000
	A32	VG 680		megol Gearoil Synth 680	Mobilgear SHC XMP680	GEAR SINTEC CLP 680
	A33	VG 460		megol Gearoil Synth 460	Mobil SHC 634 Mobilgear SHC XMP460	GEAR SINTEC CLP 460
	A34	VG 320		megol Gearoil Synth 320	Mobil SHC 632 Mobilgear SHC XMP320	GEAR SINTEC CLP 320
	A35	VG 220		megol Gearoil Synth 220	Mobil SHC 630 Mobilgear SHC XMP220	GEAR SINTEC CLP 220
	A36	VG 150			Mobil SHC 629 Mobilgear SHC XMP150	GEAR SINTEC CLP 150
	A37	VG 100				GEAR SINTEC CLP 100
Biologically degradable oils (BIO oil)	A41	VG 1000				
	A42	VG 680				
	A43	VG 460				
	A44	VG 320				
	A45	VG 220				
	A46	VG 150				
	A47	VG 100				
Physiologically safe oils (PHY oil)	A51	VG 1000				
	A52	VG 680				
	A53	VG 460				
	A54	VG 320				
	A55	VG 220				
	A56	VG 150				
	A57	VG 100				

Table A			Lubricating oils for FLENDER helical-gear, bevel helical-gear and planetary-gear units			
Lubricant	Code no.	**Viscosity** ISO-VG DIN 51519 at 40 °C (mm^2/s)	OMV	ORLEN OIL	Petrol Ofisi	Q8
Mineral oils (MIN oil)	A11	VG 1000	OMV gear HST 1000		PO Gravis MP 1000	
	A12	VG 680	OMV gear HST 680	TRANSOL PREMIUM 680	PO Gravis MP 680	
	A13	VG 460	OMV gear HST 460	TRANSOL PREMIUM 460	PO Gravis MP 460	
	A14	VG 320	OMV gear HST 320	TRANSOL PREMIUM 320	PO Gravis MP 320	Q8 Goya NT 320
	A15	VG 220	OMV gear HST 220	TRANSOL PREMIUM 220	PO Gravis MP 220	Q8 Goya NT 220
	A16	VG 150	OMV gear HST 150		PO Gravis MP 150	Q8 Goya NT 150
	A17	VG 100	OMV gear HST 100		PO Gravis MP 100	
Polyglycol (PG oil)	A21	VG 1000				
	A22	VG 680				
	A23	VG 460				
	A24	VG 320				
	A25	VG 220				
	A26	VG 150				
	A27	VG 100				
Poly-α-olefin (PAO oil)	A31	VG 1000		TRANSGEAR PE 1000	PO Gravis SP 1000	
	A32	VG 680		TRANSGEAR PE 680	PO Gravis SP 680	
	A33	VG 460		TRANSGEAR PE 460	PO Gravis SP 460	Q8 El Greco 460
	A34	VG 320		TRANSGEAR PE 320	PO Gravis SP 320	Q8 El Greco 320
	A35	VG 220		TRANSGEAR PE 220	PO Gravis SP 220	Q8 El Greco 220
	A36	VG 150				Q8 El Greco 150
	A37	VG 100				
Biologically degradable oils (BIO oil)	A41	VG 1000				
	A42	VG 680				
	A43	VG 460				
	A44	VG 320				
	A45	VG 220				
	A46	VG 150				
	A47	VG 100				
Physiologically safe oils (PHY oil)	A51	VG 1000				
	A52	VG 680				
	A53	VG 460				
	A54	VG 320				
	A55	VG 220				
	A56	VG 150				
	A57	VG 100				

Table A Lubricant	Code no.	Viscosity ISO-VG DIN 51519 at 40 °C (mm^2/s)	Lubricating oils for FLENDER helical-gear, bevel helical-gear and planetary-gear units			
			Shell	STATOIL	TEXACO	TOTAL
Mineral oils (MIN oil)	A11	VG 1000				KASSILLA GMP 1000 CARTER EP 1000
	A12	VG 680		LoadWay EP 680		KASSILLA GMP 680 CARTER EP 680
	A13	VG 460	Shell Omala F 460	LoadWay EP 460	Meropa WM 460 Auriga EP 460	KASSILLA GMP 460 CARTER EP 460
	A14	VG 320	Shell Omala F 320	LoadWay EP 320	Meropa WM 320 Auriga EP 320	KASSILLA GMP 320 CARTER EP 320
	A15	VG 220	Shell Omala F 220	LoadWay EP 220	Meropa WM 220 Auriga EP 220	KASSILLA GMP 220 CARTER EP 220
	A16	VG 150			Meropa WM 150 Auriga EP 150	
	A17	VG 100			Meropa WM 100 Auriga EP 100	
Polyglycol (PG oil)	A21	VG 1000	Shell Tivela S 1000 Shell Cassida WG 1000			
	A22	VG 680	Shell Tivela S 680 Shell Cassida WG 680			
	A23	VG 460	Shell Tivela S 460 Shell Cassida WG 460			
	A24	VG 320	Shell Tivela S 320 Shell Cassida WG 320			
	A25	VG 220	Shell Tivela S 220 Shell Cassida WG 220			
	A26	VG 150	Shell Tivela S 150 Shell Cassida WG 150			
	A27	VG 100				
Poly-α-olefin (PAO oil)	A31	VG 1000				CARTER SH 1000
	A32	VG 680	Shell Omala HD 680			CARTER SH 680
	A33	VG 460	Shell Omala HD 460			CARTER SH 460
	A34	VG 320	Shell Omala HD 320	MERETA 320		CARTER SH 320
	A35	VG 220	Shell Omala HD 220	MERETA 220		CARTER SH 220
	A36	VG 150	Shell Omala HD 150	MERETA 150		CARTER SH 150
	A37	VG 100				
Biologically degradable oils (BIO oil)	A41	VG 1000				
	A42	VG 680				
	A43	VG 460	Shell Omala EPB 460			
	A44	VG 320	Shell Omala EPB 320			
	A45	VG 220	Shell Omala EPB 220			
	A46	VG 150	Shell Omala EPB 150			
	A47	VG 100	Shell Omala EPB 100			
Physiologically safe oils (PHY oil)	A51	VG 1000	Shell Cassida WG 1000 5)			
	A52	VG 680	Shell Cassida WG 680 5)			
	A53	VG 460	Shell Cassida WG 460 5)			Keystone Nevastane SY 460 5)
	A54	VG 320	Shell Cassida WG 320 5)			Keystone Nevastane SY 320 5)
	A55	VG 220	Shell Cassida WG 220 5)			Keystone Nevastane SY 220 5)
	A56	VG 150				
	A57	VG 100				

5) PG oil

Table A Lubricant	Code no.	Viscosity ISO-VG DIN 51519 at 40 °C (mm^2/s)	Lubricating oils for FLENDER helical-gear, bevel helical-gear and planetary-gear units			
Mineral oils (MIN oil)	A11	VG 1000		VECO MATRANOL XP 1000		
	A12	VG 680	TUNGEAR 680 6)	VECO MATRANOL XP 680	COMPOUND MP 680	
	A13	VG 460	TUNGEAR 460 6)	VECO MATRANOL XP 460	COMPOUND MP 460	
	A14	VG 320	TUNGEAR 320 6)	VECO MATRANOL XP 320	COMPOUND MP 320	
	A15	VG 220	TUNGEAR 220 6)	VECO MATRANOL XP 220	COMPOUND MP 220	
	A16	VG 150			COMPOUND MP 150	
	A17	VG 100				
Polyglycol (PG oil)	A21	VG 1000				
	A22	VG 680				
	A23	VG 460				
	A24	VG 320				
	A25	VG 220				
	A26	VG 150				
	A27	VG 100				
Poly-α-olefin (PAO oil)	A31	VG 1000				
	A32	VG 680				
	A33	VG 460				
	A34	VG 320				
	A35	VG 220				
	A36	VG 150				
	A37	VG 100				
Biologically degradable oils (BIO oil)	A41	VG 1000				
	A42	VG 680				
	A43	VG 460				
	A44	VG 320				
	A45	VG 220				
	A46	VG 150				
	A47	VG 100				
Physiologically safe oils (PHY oil)	A51	VG 1000				
	A52	VG 680				
	A53	VG 460				
	A54	VG 320				
	A55	VG 220				
	A56	VG 150				
	A57	VG 100				

6) TUNGEAR is approved for Brazil under the name of GEAROIL in VG 220, 320, 460 and 680. Distributor: TRIBOTECHNICA Lubrificantes Sinteticos Sao Paulo.
TUNGEAR is approved for India under the name of Mox-Active Gear oil in VG 220, 320 and 460. Distributor: OKS Speciality Lubricants Bombay.

Table B Lubricant	Code no.	Viscosity ISO-VG DIN 51519 at 40 °C (mm^2/s)	Lubricating oils for FLENDER worm-gear units			
			ARAL	AVIA	BECHEM	bp
Mineral oils (MIN oil)	B11	VG 1000				Energol GR-XP 1000
	B12	VG 680	Degol BG 680			Energol GR-XP 680
	B13	VG 460	Degol BG 460			Energol GR-XP 460
	B14	VG 320	Degol BG 320			Energol GR-XP 320
	B15	VG 220	Degol BG 220			Energol GR-XP 220
	B16	VG 150	Degol BG 150			Energol GR-XP 150
	B17	VG 100	Degol BG 100			Energol GR-XP 100
Polyglycol (PG oil)	B21	VG 1000	Degol GS 1000			
	B22	VG 680	Degol GS 680	GEAR VSG 680	BERUSYNTH EP 680	Enersyn SG-XP 680
	B23	VG 460	Degol GS 460	GEAR VSG 460	BERUSYNTH EP 460	Enersyn SG-XP 460
	B24	VG 320	Degol GS 320	GEAR VSG 320	BERUSYNTH EP 320	Enersyn SG-XP 320
	B25	VG 220	Degol GS 220	GEAR VSG 220	BERUSYNTH EP 220	Enersyn SG-XP 220
	B26	VG 150	Degol GS 150	GEAR VSG 150	BERUSYNTH EP 150	Enersyn SG-XP 150
	B27	VG 100		GEAR VSG 100	BERUSYNTH EP 100	Enersyn SG-XP 100
Poly-α-olefin (PAO oil)	B31	VG 1000				
	B32	VG 680				
	B33	VG 460				
	B34	VG 320				
	B35	VG 220				
	B36	VG 150				
	B37	VG 100				
Biologically degradable oils (BIO oil)	B41	VG 1000				
	B42	VG 680				
	B43	VG 460				
	B44	VG 320				
	B45	VG 220				
	B46	VG 150				
	B47	VG 100				
Physiologically safe oils (PHY oil)	B51	VG 1000				
	B52	VG 680				
	B53	VG 460				
	B54	VG 320				
	B55	VG 220				
	B56	VG 150				
	B57	VG 100				

Table B			Lubricating oils for FLENDER worm-gear units			
Lubricant	Code no.	**Viscosity** ISO-VG DIN 51519 at 40 °C (mm^2/s)	Castrol performance	cognis	Esso	FUCHS
Mineral oils (MIN oil)	B11	VG 1000	Optigear BM 1000 / Tribol 1100 / 1000			
	B12	VG 680	Optigear BM 680 / Tribol 1100 / 680		SPARTAN EP 680 1)	
	B13	VG 460	Optigear BM 460 / Tribol 1100 / 460		SPARTAN EP 460 1)	
	B14	VG 320	Optigear BM 320 / Tribol 1100 / 320		SPARTAN EP 320 1)	
	B15	VG 220	Optigear BM 220 / Tribol 1100 / 220		SPARTAN EP 220 1)	
	B16	VG 150	Optigear BM 150 / Tribol 1100 / 150		SPARTAN EP 150 1)	
	B17	VG 100	Optigear BM 100 / Tribol 1100 / 100		SPARTAN EP 100 1)	
Polyglycol (PG oil)	B21	VG 1000	Optiflex A 1000 / Tribol 800 / 1000	Breox SL 1000		RENOLIN PG 1000
	B22	VG 680	Optiflex A 680 / Tribol 800 / 680	Breox SL 680		RENOLIN PG 680
	B23	VG 460	Optiflex A 460 / Tribol 800 / 460	Breox SL 460		RENOLIN PG 460
	B24	VG 320	Optiflex A 320 / Tribol 800 / 320	Breox SL 320		RENOLIN PG 320
	B25	VG 220	Optiflex A 220 / Tribol 800 / 220	Breox SL 220		RENOLIN PG 220
	B26	VG 150	Optiflex A 150 / Tribol 800 / 150	Breox SL 150		RENOLIN PG 150
	B27	VG 100	Optiflex A 100 / Tribol 800 / 100			RENOLIN PG 100
Poly-α-olefin (PAO oil)	B31	VG 1000				
	B32	VG 680				
	B33	VG 460				
	B34	VG 320				
	B35	VG 220				
	B36	VG 150				
	B37	VG 100				
Biologically degradable oils (BIO oil)	B41	VG 1000				
	B42	VG 680				
	B43	VG 460				
	B44	VG 320				
	B45	VG 220				
	B46	VG 150				
	B47	VG 100				
Physiologically safe oils (PHY oil)	B51	VG 1000		Breox FGL 1000 2)		
	B52	VG 680	Tribol FoodProof 1800 / 680 2)	Breox FGL 680 2)		
	B53	VG 460	Tribol FoodProof 1800 / 460 2)	Breox FGL 460 2)		
	B54	VG 320	Tribol FoodProof 1800 / 320 2)	Breox FGL 320 2)		
	B55	VG 220	Tribol FoodProof 1800 / 220 2)	Breox FGL 220 2)		
	B56	VG 150		Breox FGL 150 2)		
	B57	VG 100				

1) ESSO guarantees the qualities required by FLENDER only for products from Europe
2) PG oil

Table B			Lubricating oils for FLENDER worm-gear units			
Lubricant	Code no.	**Viscosity** ISO-VG DIN 51519 at 40 °C (mm^2/s)	FUCHS LUBRITECH	KLÜBER LUBRICATION	Mobil	Shell
Mineral oils (MIN oil)	B11	VG 1000				
	B12	VG 680		Klüberoil GEM 1 - 680 N	Mobilgear 636 / Mobilgear XMP 680	
	B13	VG 460		Klüberoil GEM 1 - 460 N	Mobilgear 634 / Mobilgear XMP 460	
	B14	VG 320		Klüberoil GEM 1 - 320 N	Mobilgear 632 / Mobilgear XMP 320	
	B15	VG 220		Klüberoil GEM 1 - 220 N	Mobilgear 630 / Mobilgear XMP 220	
	B16	VG 150		Klüberoil GEM 1 - 150 N	Mobilgear 629 / Mobilgear XMP 150	
	B17	VG 100		Klüberoil GEM 1 - 100 N	Mobilgear 627 / Mobilgear XMP 100	
Polyglycol (PG oil)	B21	VG 1000	GEARMASTER PGP 1000	SYNTHESO D 1000 EP		Shell Tivela S 1000 / Shell Cassida WG 1000
	B22	VG 680	GEARMASTER PGP 680	SYNTHESO D 680 EP		Shell Tivela S 680 / Shell Cassida WG 680
	B23	VG 460	GEARMASTER PGP 460	SYNTHESO D 460 EP		Shell Tivela S 460 / Shell Cassida WG 460
	B24	VG 320	GEARMASTER PGP 320	SYNTHESO D 320 EP		Shell Tivela S 320 / Shell Cassida WG 320
	B25	VG 220	GEARMASTER PGP 220	SYNTHESO D 220 EP		Shell Tivela S 220 / Shell Cassida WG 220
	B26	VG 150	GEARMASTER PGP 150	SYNTHESO D 150 EP		Shell Tivela S 150
	B27	VG 100	GEARMASTER PGP 100	SYNTHESO D 100 EP		
Poly-α-olefin (PAO oil)	B31	VG 1000				
	B32	VG 680				
	B33	VG 460				
	B34	VG 320				
	B35	VG 220				
	B36	VG 150				
	B37	VG 100				
Biologically degradable oils (BIO oil)	B41	VG 1000				
	B42	VG 680				
	B43	VG 460				
	B44	VG 320				
	B45	VG 220				
	B46	VG 150				
	B47	VG 100				
Physiologically safe oils (PHY oil)	B51	VG 1000				Shell Cassida WG 1000 3)
	B52	VG 680				Shell Cassida WG 680 3)
	B53	VG 460				Shell Cassida WG 460 3)
	B54	VG 320				Shell Cassida WG 320 3)
	B55	VG 220				Shell Cassida WG 220 3)
	B56	VG 150				
	B57	VG 100				

3) PG oil

Table B			Lubricating oils for FLENDER worm-gear units			
Lubricant	Code no.	**Viscosity** ISO-VG DIN 51519 at 40 °C (mm^2/s)	SRS			
Mineral oils (MIN oil)	B11	VG 1000				
	B12	VG 680	Ersolan 680			
	B13	VG 460	Ersolan 460			
	B14	VG 320	Ersolan 320			
	B15	VG 220	Ersolan 220			
	B16	VG 150	Ersolan 150			
	B17	VG 100	Ersolan 100			
Polyglycol (PG oil)	B21	VG 1000				
	B22	VG 680				
	B23	VG 460				
	B24	VG 320				
	B25	VG 220				
	B26	VG 150				
	B27	VG 100				
Poly-α-olefin (PAO oil)	B31	VG 1000				
	B32	VG 680				
	B33	VG 460				
	B34	VG 320				
	B35	VG 220				
	B36	VG 150				
	B37	VG 100				
Biologically degradable oils (BIO oil)	B41	VG 1000				
	B42	VG 680				
	B43	VG 460				
	B44	VG 320				
	B45	VG 220				
	B46	VG 150				
	B47	VG 100				
Physiologically safe oils (PHY oil)	B51	VG 1000				
	B52	VG 680				
	B53	VG 460				
	B54	VG 320				
	B55	VG 220				
	B56	VG 150				
	B57	VG 100				

Table C Lubricant	Code no.	Viscosity ISO-VG DIN 51519 at 40 °C (mm^2/s)	Lubricating oils for FLENDER gear motors			
			ADDINOL	ANDEROL® Specialty Lubricants	ARAL	AVIA
Mineral oils (MIN oil)	C15	VG 220	CLP 220 S ECO GEAR 220 M		Degol BG 220 Plus Degol BG 220 1)	GEAR RSX 220
	C16	VG 150	CLP 150 S ECO GEAR 150 M		Degol BG 150 Plus Degol BG 150 1)	GEAR RSX 150
	C17	VG 100	ECO GEAR 100 M		Degol BG 100 Plus Degol BG 100 1)	GEAR RSX 100
Polyglycol (PG oil)	C23	VG 460			Degol GS 460	GEAR VSG 460
	C24	VG 320			Degol GS 320	GEAR VSG 320
	C25	VG 220			Degol GS 220	GEAR VSG 220
Poly-α-olefin (PAO oil)	C33	VG 460	ECO GEAR 460 S	4460 XEP 5460 XEP	Degol PAS 460	SYNTOGEAR PE 460 EVOGEAR SX 460
	C34	VG 320	ECO GEAR 320 S	4320 XEP 5320 XEP	Degol PAS 320	SYNTOGEAR PE 320 EVOGEAR SX 320
	C35	VG 220	ECO GEAR 220 S	4220 XEP 5220 XEP	Degol PAS 220	SYNTOGEAR PE 220 EVOGEAR SX 220
Biologically degradable oils (BIO oil)	C44	VG 320				
	C45	VG 220				
	C46	VG 150				
Physiologically safe oils (PHY oil)	C53	VG 460				
	C54	VG 320				
	C55	VG 220				

1) with solid content MoS_2

Table C Lubricant	Code no.	Viscosity ISO-VG DIN 51519 at 40 °C (mm^2/s)	Lubricating oils for FLENDER gear motors			
			BECHEM	BEL-RAY TOTAL PERFORMANCE LUBRICANTS	bp	Brugarolas
Mineral oils (MIN oil)	C15	VG 220			Energol GR-XF 220 Energol GR-XP 220	Beslux Gear XP 220
	C16	VG 150			Energol GR-XF 150	
	C17	VG 100				
Polyglycol (PG oil)	C23	VG 460	BERUSYNTH EP 460		Enersyn SG-XP 460	Beslux Sincart W 460
	C24	VG 320	BERUSYNTH EP 320		Enersyn SG-XP 320	Beslux Sincart W 320
	C25	VG 220	BERUSYNTH EP 220		Enersyn SG-XP 220	Beslux Sincart W 220
Poly-α-olefin (PAO oil)	C33	VG 460		Bel-Ray Synth. Gear Oil 6694	Enersyn EP-XF 460	Beslux Gearsint XP 460
	C34	VG 320		Bel-Ray Synth. Gear Oil 6692	Enersyn EP-XF 320	Beslux Gearsint XP 320
	C35	VG 220		Bel-Ray Synth. Gear Oil 6690	Enersyn EP-XF 220	Beslux Gearsint XP 220
Biologically degradable oils (BIO oil)	C44	VG 320				
	C45	VG 220				
	C46	VG 150				
Physiologically safe oils (PHY oil)	C53	VG 460				
	C54	VG 320				
	C55	VG 220				

Table C Lubricant	Code no.	Viscosity ISO-VG DIN 51519 at 40 °C (mm^2/s)	Lubricating oils for FLENDER gear motors			
			B&L	Castrol classic	Castrol performance	CEPSA
Mineral oils (MIN oil)	C15	VG 220		Alpha SP 220 Alpha MAX 220	Optigear BM 220 Tribol 1100 / 220	CEPSA AEROGEAR 220
	C16	VG 150		Alpha SP 150 Alpha MAX 150	Optigear BM 150 Tribol 1100 / 150	
	C17	VG 100		Alpha SP 100 Alpha MAX 100	Optigear BM 100 Tribol 1100 / 100	
Polyglycol (PG oil)	C23	VG 460			Optiflex A 460 Tribol 800 / 460	
	C24	VG 320			Optiflex A 320 Tribol 800 / 320	
	C25	VG 220			Optiflex A 220 Tribol 800 / 220	
Poly-α-olefin (PAO oil)	C33	VG 460		Optigear Synth. A 460 Alphasyn EP 460	Optigear Synth. X 460 Tribol 1710 / 460	AEROGEAR SYNT 460
	C34	VG 320		Optigear Synth. A 320 Alphasyn EP 320	Optigear Synth. X 320 Tribol 1710 / 320	AEROGEAR SYNT 320
	C35	VG 220		Optigear Synth. A 220 Alphasyn EP 220	Optigear Synth. X 220 Tribol 1710 / 220	AEROGEAR SYNT 220
Biologically degradable oils (BIO oil)	C44	VG 320	RIVOLTA S.G.L. 320		Tribol BioTop 1418 / 320	
	C45	VG 220	RIVOLTA S.G.L. 220		Tribol BioTop 1418 / 220	
	C46	VG 150			Tribol BioTop 1418 / 150	
Physiologically safe oils (PHY oil)	C53	VG 460			Optileb GT 460 FoodProof 1800/460 2)	
	C54	VG 320			Optileb GT 320 FoodProof 1800/320 2)	
	C55	VG 220			Optileb GT 220 FoodProof 1800/220 2)	

2) PG oil

Table C Lubricant	Code no.	Viscosity ISO-VG DIN 51519 at 40 °C (mm^2/s)	Lubricating oils for FLENDER gear motors			
			cognis	DELTA OIL	Esso	FUCHS
Mineral oils (MIN oil)	C15	VG 220		EP Industrial G 220	SPARTAN EP 220 3)	RENOLIN CLP 220 RENOLIN CLP 220 PLUS
	C16	VG 150			SPARTAN EP 150 3)	RENOLIN CLP 150 RENOLIN CLP 150 PLUS
	C17	VG 100			SPARTAN EP 100 3)	RENOLIN CLP 100 RENOLIN CLP 100 PLUS
Polyglycol (PG oil)	C23	VG 460	Breox SL 460			RENOLIN PG 460
	C24	VG 320	Breox SL 320			RENOLIN PG 320
	C25	VG 220	Breox SL 220			RENOLIN PG 220
Poly-α-olefin (PAO oil)	C33	VG 460				RENOLIN UNISYN CLP 460
	C34	VG 320				RENOLIN UNISYN CLP 320
	C35	VG 220				RENOLIN UNISYN CLP 220
Biologically degradable oils (BIO oil)	C44	VG 320				PLANTOGEAR 320 S
	C45	VG 220				PLANTOGEAR 220 S
	C46	VG 150				PLANTOGEAR 150 S
Physiologically safe oils (PHY oil)	C53	VG 460	Breox FGL 460 4)			
	C54	VG 320	Breox FGL 320 4)			
	C55	VG 220	Breox FGL 220 4)			

3) ESSO guarantees the qualities required by FLENDER only for products from Europe
4) PG oil

Table C Lubricant	Code no.	Viscosity ISO-VG DIN 51519 at 40 °C (mm^2/s)	Lubricating oils for FLENDER gear motors			
			FUCHS LUBRITECH	FRAGOL	galp energia	KLÜBER LUBRICATION
Mineral oils (MIN oil)	C15	VG 220	GEARMASTER CLP 220			Klüberoil GEM 1 - 220 N
	C16	VG 150	GEARMASTER CLP 150			Klüberoil GEM 1 - 150 N
	C17	VG 100	GEARMASTER CLP 100			Klüberoil GEM 1 - 100 N
Polyglycol (PG oil)	C23	VG 460	GEARMASTER PGP 460	Ucolub BSL-IG 460		SYNTHESO D 460 EP
	C24	VG 320	GEARMASTER PGP 320	Ucolub BSL-IG 320		SYNTHESO D 320 EP
	C25	VG 220	GEARMASTER PGP 220	Ucolub BSL-IG 220		SYNTHESO D 220 EP
Poly-α-olefin (PAO oil)	C33	VG 460	GEARMASTER SYN 460	Ucolub N-PA 460	Galp Transgear SMP 460	Klübersynth. GEM 4 - 460 N
	C34	VG 320	GEARMASTER SYN 320	Ucolub N-PA 320	Galp Transgear SMP 320	Klübersynth. GEM 4 - 320 N
	C35	VG 220	GEARMASTER SYN 220	Ucolub N-PA 220	Galp Transgear SMP 220	Klübersynth. GEM 4 - 220 N
Biologically degradable oils (BIO oil)	C44	VG 320	GEARMASTER ECO 320			Klübersynth. GEM 2 - 320
	C45	VG 220	GEARMASTER ECO 220			Klübersynth. GEM 2 - 220
	C46	VG 150	GEARMASTER ECO 150			
Physiologically safe oils (PHY oil)	C53	VG 460		Ucolub BSL 460 5)		
	C54	VG 320		Ucolub BSL 320 5)		
	C55	VG 220		Ucolub BSL 220 5)		

5) PG oil

Table C Lubricant	Code no.	Viscosity ISO-VG DIN 51519 at 40 °C (mm^2/s)	Lubricating oils for FLENDER gear motors			
			LE	MEGUIN OILS OF GERMANY	Mobil	MOTOREX
Mineral oils (MIN oil)	C15	VG 220	607 ALMASOL Vari-Purpose Gear Lubricant		Mobilgear 630 Mobilgear XMP 220	GEAR COMPOUND PLUS 220
	C16	VG 150	604 ALMASOL Vari-Purpose Gear Lubricant		Mobilgear 629 Mobilgear XMP 150	GEAR COMPOUND PLUS 150
	C17	VG 100	606 ALMASOL Vari-Purpose Gear Lubricant		Mobilgear 627 Mobilgear XMP 100	GEAR COMPOUND PLUS 100
Polyglycol (PG oil)	C23	VG 460				
	C24	VG 320				
	C25	VG 220				
Poly-α-olefin (PAO oil)	C33	VG 460		megol Gearoil Synth 460	Mobil SHC 634 Mobilgear SHC XMP460	GEAR SINTEC CLP 460
	C34	VG 320		megol Gearoil Synth 320	Mobil SHC 632 Mobilgear SHC XMP320	GEAR SINTEC CLP 320
	C35	VG 220		megol Gearoil Synth 220	Mobil SHC 630 Mobilgear SHC XMP220	GEAR SINTEC CLP 220
Biologically degradable oils (BIO oil)	C44	VG 320				
	C45	VG 220				
	C46	VG 150				
Physiologically safe oils (PHY oil)	C53	VG 460				
	C54	VG 320				
	C55	VG 220				

Table C Lubricant	Code no.	Viscosity ISO-VG DIN 51519 at 40 °C (mm^2/s)	Lubricating oils for FLENDER gear motors			
			OMV	ORLEN OIL	Petrol Ofisi	Q8
Mineral oils (MIN oil)	C15	VG 220	OMV gear HST 220	TRANSOL PREMIUM 220	PO Gravis MP 220	Q8 Goya NT 220
	C16	VG 150	OMV gear HST 150		PO Gravis MP 150	Q8 Goya NT 150
	C17	VG 100	OMV gear HST 100		PO Gravis MP 100	
Polyglycol (PG oil)	C23	VG 460				
	C24	VG 320				
	C25	VG 220				
Poly-α-olefin (PAO oil)	C33	VG 460		TRANSGEAR PE 460	PO Gravis SP 460	Q8 El Greco 460
	C34	VG 320		TRANSGEAR PE 320	PO Gravis SP 320	Q8 El Greco 320
	C35	VG 220		TRANSGEAR PE 220	PO Gravis SP 220	Q8 El Greco 220
Biologically degradable oils (BIO oil)	C44	VG 320				
	C45	VG 220				
	C46	VG 150				
Physiologically safe oils (PHY oil)	C53	VG 460				
	C54	VG 320				
	C55	VG 220				

Table C Lubricant	Code no.	Viscosity ISO-VG DIN 51519 at 40 °C (mm^2/s)	Lubricating oils for FLENDER gear motors			
			Shell	SRS	STATOIL	TEXACO
Mineral oils (MIN oil)	C15	VG 220	Shell Omala F 220 Shell Omala 220	Ersolan 220	LoadWay EP 220	Meropa WM 220 Auriga EP 220
	C16	VG 150	Shell Omala F 150 Shell Omala 150	Ersolan 150		Meropa WM 150 Auriga EP 150
	C17	VG 100	Shell Omala F 100 Shell Omala 100	Ersolan 100		Meropa WM 100 Auriga EP 100
Polyglycol (PG oil)	C23	VG 460	Shell Tivela S 460 Shell Cassida WG 460			
	C24	VG 320	Shell Tivela S 320 Shell Cassida WG 320			
	C25	VG 220	Shell Tivela S 220 Shell Cassida WG 220			
Poly-α-olefin (PAO oil)	C33	VG 460	Shell Omala HD 460			
	C34	VG 320	Shell Omala HD 320		MERETA 320	
	C35	VG 220	Shell Omala HD 220		MERETA 220	
Biologically degradable oils (BIO oil)	C44	VG 320	Shell Omala EPB 320			
	C45	VG 220	Shell Omala EPB 220			
	C46	VG 150	Shell Omala EPB 150			
Physiologically safe oils (PHY oil)	C53	VG 460	Shell Cassida WG 460 6)			
	C54	VG 320	Shell Cassida WG 320 6)			
	C55	VG 220	Shell Cassida WG 220 6)			

6) PG oil

Table C Lubricant	Kenn-ziffer	Viscosity ISO-VG DIN 51519 at 40 °C (mm^2/s)	Lubricating oils for FLENDER gear motors			
			TOTAL	SHAP	VECO	Verkol Lubricantes
Mineral oils (MIN oil)	C15	VG 220	KASSILLA GMP 220 CARTER EP 220	TUNGEAR 220 7)	VECO MATRANOL XP 220	COMPOUND MP 220
	C16	VG 150				COMPOUND MP 150
	C17	VG 100				
Polyglycol (PG oil)	C23	VG 460				
	C24	VG 320				
	C25	VG 220				
Poly-α-olefin (PAO oil)	C33	VG 460	CARTER SH 460			
	C34	VG 320	CARTER SH 320			
	C35	VG 220	CARTER SH 220			
Biologically degradable oils (BIO oil)	C44	VG 320				
	C45	VG 220				
	C46	VG 150				
Physiologically safe oils (PHY oil)	C53	VG 460	Kestone Nevastane SY 460 8)			
	C54	VG 320	Kestone Nevastane SY 320 8)			
	C55	VG 220	Kestone Nevastane SY 220 8)			

7) TUNGEAR is approved for Brazil under the name of GEAROIL in VG 220. Distributor: TRIBOTECHNICA Lubrificantes Sinteticos Sao Paulo.
TUNGEAR is approved for India under the name of Mo_X-Active Gear oil in VG 220. Distributor: OKS Speciality Lubricants Bombay.
8) PG oil

1.2 Lubricating greases for gear units and rolling bearings

For special gear unit applications, grease lubrication of the gears and/or bearings may be necessary.

Note: Greases may be used only if their use is specified in the operating instructions for the gear unit. The relubrication periods must be adhered to.

Gear greases are suitable for the lubrication of gears and bearings with closed gear units (e.g. small gear units) and open drives with low peripheral speeds (e.g. for girth gears, racks).

As well as lubrication, rolling bearing greases are used for the special sealing of bearing points, e.g. with vertical gear-unit connection shafts or against environmental action such as dust or water spray.

Note: In closed gear units with internal oil lubrication the gear oils must not be allowed to mix with bearing greases.

Table D			**Lubricating greases for FLENDER gear units and rolling bearings**			
Lubricant	Code no.	**Consistency** NLGI class DIN 51818	ARAL	bp	Castrol classic	Castrol performance
Gear greases (MIN-GF) Mineral oil base	G13	3				Viscogen 1)
	G14	2				
	G15	1				
	G16	0				
	G17	00	Aralub FDP 00		CLS Grease	Tribol 5000 Optitemp OG 0
	G18	000				Longtime PD 00 MA Mehrzweckfett 00
Rolling bearing greases (MIN-WF) Mineral oil base Lithium saponification	H12	4				
	H13	3	Aralub HL3	Energrease LS 3	Spheerol AP 3	
	H14	2	Aralub HL2	Energrease LS 2	Spheerol AP 2 Spheerol EPL 2	Tribol 4020 / 220-2 Longtime PD 2
	H15	1				Tribol 3785 2)

1) with solid content MoS_2
2) Mixture of mineral oil and PAO

Table D			**Lubricating greases for FLENDER gear units and rolling bearings**			
Lubricant	Code no.	**Consistency** NLGI class DIN 51818	FAG	FUCHS	FUCHS LUBRITECH	KLÜBER LUBRICATION
Gear greases (MIN-GF) Mineral oil base	G13	3				
	G14	2				
	G15	1				
	G16	0				
	G17	00				MICROLUBE GB 00
	G18	000				
Rolling bearing greases (MIN-WF) Mineral oil base Lithium saponification	H12	4				
	H13	3		Renolit FWA 220 Renolit H 443-HD 88		
	H14	2	Arcanol L 186 V 3)	Renolit H 443-HD 88 Renolit FWA 160	LAGERMEISTER EP 2	CENTOPLEX GLP 402
	H15	1				

3) Li, Ca saponification

Table D			Lubricating greases for FLENDER gear units and rolling bearings			
Lubricant	Code no.	**Consistency** NLGI class DIN 51818	Mobil	Shell	SRS	TEXACO
Gear greases (MIN-GF) Mineral oil base	G13	3				Glissando FG 30 EP
	G14	2				
	G15	1				
	G16	0	Mobilux EP 004		Wiolub GFW	
	G17	00		Alvania GL 00		Marfak 00
	G18	000				
Rolling bearing greases (MIN-WF) Mineral oil base Lithium saponification	H12	4				
	H13	3	Mobilux EP 3	Alvania RL 3 Alvania EP / LF 3		
	H14	2	Mobilux EP 2	Alvania RL 2 Alvania EP / LF 2	Wiolub LFK 2	Multifak 2 Multifak 20
	H15	1				

Table D			Lubricating greases for FLENDER gear units and rolling bearings			
Lubricant	Code no.	**Consistency** NLGI class DIN 51818	TOTAL			
Gear greases (MIN-GF) Mineral oil base	G13	3				
	G14	2				
	G15	1				
	G16	0	Multis EP 0			
	G17	00	Multis EP 00			
	G18	000				
Rolling bearing greases (MIN-WF) Mineral oil base Lithium saponification	H12	4				
	H13	3	Multis 3 Multis EP 3			
	H14	2	Multis 2 Multis EP 2			
	H15	1	Multis 1 Multis EP 1			

2. Lubricants for ZAPEX couplings

Note: For **FLUDEX couplings**, special lubricant recommendations apply.

According to manufacturer's information the oils and greases listed in these operating instructions are manufactured and supplied **world-wide** in the above-mentioned quality as required by FLENDER (Exceptions: Observe footnotes in the tables).

2.1 Required oil and grease quality

For FLENDER ZAPEX couplings, only oils and greases containing active agents to DIN 51 517-3 for increasing corrosion protection and resistance to ageing and for reducing wear in mixed-friction areas are approved. The scuffing resistance of the oils in the FZG test to DIN 51 354-2 must comply with stage 12 or higher under A/8,3/90 test conditions.

In addition, the oils and greases must meet the following quality requirements specified by FLENDER:

- Compatibility with elastomer materials of the shaft-sealing rings
- Compatibility with liquid seals between bolted-joint surfaces.

Note: The use of lubricants which do not comply with the above quality requirements may invalidate our product guarantee. Please note that every lubricant manufacturer or supplier is responsible for the quality of his product.

Which lubricant to select always depends on the viscosity or NLGI class indicated in these operating instructions. If a different viscosity or NLGI class or a lubricant of a type other than those recommended in these instructions is used, the operator is responsible for its technical suitability. To minimise the technical risk in such cases, we recommend using a lubricant of the above indicated quality, which should be accompanied by a statement of suitability by the lubricant manufacturer.

Caution! **The instructions given in the operating instructions for the couplings must be observed!**

Deviations are permitted only after consultation with FLENDER!

2.1.1 Oil and grease types

Note: The upper and lower limits for the operating temperatures (flash point, pour point) of individual oils and greases may vary considerably. For these and other data and properties of oils and greases, refer to the lubricant manufacturers' technical data sheets.

According to the manufacturers, the following are the minimum periods during which the oils or greases can be used without undergoing any significant change in quality:

– with use at up to 70 °C after approx. 8 000 operating hours, max. 2 years,
  with use at over 70 °C after approx. 3 000 operating hours, max. 1 year.

2.1.2 Oil and grease change

The degree of purity of the lubricant affects the operating reliability and life span of the lubricant and the coupling. Care must always be taken that the oil or grease in the coupling is clean. For the first lubricant change after start-up of the coupling and for subsequent lubricant changes, the specifications in the operating instructions for the coupling must be observed. With larger lubricant quantities, an anlysis should be carried out to find out whether cleaning or changing is required.

When changing lubricant of the same type, the quantity of lubricant remaining in the coupling should be kept as low as possible. Generally speaking, a small remaining quantity will cause no particular problems. Lubricants of different types and manufacturers must not be mixed together. If necessary, confirmation that the new lubricant is compatible with residues of the old lubricant should be obtained from the manufacturer.

Caution! **Lubricants must never be mixed with other substances.**

Table E Lubricant	Code no.	Oil: Viscosity in cSt at 40 °C DIN 51519 Grease: Consistency DIN 51818		Lubricating oils and lubricating greases for FLENDER ZAPEX couplings			
				ADDINOL	ARAL	AVIA	bp
Mineral oils (MIN oil)	I11	ISO class	VG 1000				
	I12		VG 680	CLP 680 S ECO GEAR 680 M	Degol BG 680 Plus	GEAR RSX 680	Energol GR-XF 680
	I13		VG 460	CLP 460 S ECO GEAR 460 M	Degol BG 460 Plus	GEAR RSX 460	Energol GR-XF 460
	I14		VG 320				
Liquefied greases (MIN-FLF) Mineral oil base	J15	NLGI class	1				
	J16		0		Aralub Fließfett AN 0		
	J17		00				Energrease LS-EP 00
	J18		000				

Table E Lubricant	Code no.	Oil: Viscosity in cSt at 40 °C DIN 51519 Grease: Consistency DIN 51818		Lubricating oils and lubricating greases for FLENDER ZAPEX couplings			
				Brugarolas	Castrol classic	Castrol performance	CEPSA
Mineral oils (MIN oil)	I11	ISO class	VG 1000				CEPSA AEROGEAR 1000
	I12		VG 680	Beslux gear XP 680	Alpha SP 680	Tribol 1100 / 680 Optigear BM 680	CEPSA AEROGEAR 680
	I13		VG 460	Beslux gear XP 460	Alpha SP 460 Alpha MAX 460	Tribol 1100 / 460 Optigear BM 460	CEPSA AEROGEAR 460
	I14		VG 320				
Liquefied greases (MIN-FLF) Mineral oil base	J15	NLGI class	1				
	J16		0				
	J17		00		CLS Grease	Tribol 3020/1000-00 Longtime PD 00	
	J18		000				

Table E Lubricant	Code no.	Oil: Viscosity in cSt at 40 °C DIN 51519 Grease: Consistency DIN 51818		Lubricating oils and lubricating greases for FLENDER ZAPEX couplings			
				DELTA OIL	Esso	FLENDER	FUCHS
Mineral oils (MIN oil)	I11	ISO class	VG 1000				
	I12		VG 680		SPARTAN EP 680 1)		Renolin EPX 680 Renolin CLP 680 PLUS
	I13		VG 460	EP Industrial 460	SPARTAN EP 460 1)		Renolin EPX 460 Renolin CLP 460 PLUS
	I14		VG 320				
Liquefied greases (MIN-FLF) Mineral oil base	J15	NLGI class	1				
	J16		0			FLENDER Hochleistungsfett	
	J17		00				RENOLIT SO-D 6024
	J18		000				

1) ESSO guarantees the qualities required by FLENDER only for products from Europe

Table E Lubricant	Code no.	Oil: Viscosity in cSt at 40 °C DIN 51519 Grease: Consistency DIN 51818		Lubricating oils and lubricating greases for FLENDER ZAPEX couplings			
				FUCHS LUBRITECH	KLÜBER LUBRICATION	LE	Mobil
Mineral oils (MIN oil)	I11	ISO class	VG 1000				
	I12		VG 680	GEARMASTER CLP 680	STRUCTOVIS BHD-MF	609 ALMASOL Vari-Purpose Gear Lubricant	Mobilgear 636 Mobilgear XMP 680
	I13		VG 460	GEARMASTER CLP 460		608 ALMASOL Vari-Purpose Gear Lubricant	Mobilgear 634 Mobilgear XMP 460
	I14		VG 320				
Liquefied greases (MIN-FLF) Mineral oil base	J15	NLGI class	1				
	J16		0		GRAFLOSKON C-SG 500 Plus		
	J17		00				Mobilux EP 004
	J18		000				

Table E Lubricant	Code no.	Oil: Viscosity in cSt at 40 °C DIN 51519 Grease: Consistency DIN 51818		Lubricating oils and lubricating greases for FLENDER ZAPEX couplings			
				MOTOREX	OMV	PO Petrol Ofisi	Shell
Mineral oils (MIN oil)	I11	ISO class	VG 1000			PO Gravis MP 1000	
	I12		VG 680	GEAR COMPOUND PLUS 680	OMV gear HST 680	PO Gravis MP 680	Shell Omala 680
	I13		VG 460	GEAR COMPOUND PLUS 460	OMV gear HST 460	PO Gravis MP 460	Shell Omala 460 Shell Omala F 460
	I14		VG 320			PO Gravis MP 320	
Liquefied greases (MIN-FLF) Mineral oil base	J15	NLGI class	1				
	J16		0				
	J17		00				Alvina GL 00
	J18		000				

Table E Lubricant	Code no.	Oil: Viscosity in cSt at 40 °C DIN 51519 Grease: Consistency DIN 51818		Lubricating oils and lubricating greases for FLENDER ZAPEX couplings			
				STATOIL	TEXACO	SHAP	VECO
Mineral oils (MIN oil)	I11	ISO class	VG 1000				VECO MATRANOL XP 1000
	I12		VG 680			TUNGEAR 680 2)	VECO MATRANOL XP 680
	I13		VG 460		Meropa WM 460 Auriga EP 460	TUNGEAR 460 2)	VECO MATRANOL XP 460
	I14		VG 320	LoadWay EP 320			
Liquefied greases (MIN-FLF) Mineral oil base	J15	NLGI class	1				
	J16		0				
	J17		00				
	J18		000				

2) TUNGEAR is approved for Brazil under the name of GEAROIL in VG 460 and 680. Distributor: TRIBOTECHNICA Lubrificantes Sinteticos Sao Paulo.
TUNGEAR is approved for India under the name of Mox-Active Gear oil in VG 460. Distributor: OKS Speciality Lubricants Bombay.

Table E				Lubricating oils and lubricating greases for FLENDER ZAPEX couplings			
Lubricant	Code no.	**Oil: Viscosity** in cSt at 40 °C DIN 51519 **Grease: Consistency** DIN 51818		Verkol Lubricantes			
Mineral oils (MIN oil)	I11	**ISO class**	VG 1000				
	I12		VG 680				
	I13		VG 460				
	I14		VG 320	COMPOUND MP 320			
Liquefied greases (MIN-FLF) Mineral oil base	J15	**NLGI class**	1				
	J16		0				
	J17		00				
	J18		000				

A. FRIEDR. FLENDER AG	**Alfred-Flender-Straße 77 46395 Bocholt**	**Postfach 1364 46393 Bocholt**	**Tel.: (0 28 71) 92 - 0 Fax: (0 28 71) 92 - 25 96**	**contact@flender.com www.flender.com**
A. FRIEDR. FLENDER AG Kundenservice Center Nord	Alfred-Flender-Straße 77 46395 Bocholt	Postfach 1364 46393 Bocholt	Tel.: (0 28 71) 92 - 0 Fax: (0 28 71) 92 - 14 35	ksc.nord@flender.com www.flender.com
A. FRIEDR. FLENDER AG Kundenservice Center Süd	Bahnhofstraße 40 - 44 72072 Tübingen	Postfach 1709 72007 Tübingen	Tel.: (0 70 71) 7 07 - 0 Fax: (0 70 71) 7 07 - 3 40	ksc.sued@flender.com www.flender.com
A. FRIEDR. FLENDER AG Kundenservice Center Süd (Außenstelle München)	Liebigstraße 14	85757 Karlsfeld	Tel.: (0 81 31) 90 03 - 0 Fax: (0 81 31) 90 03 - 33	ksc.sued@flender.com www.flender.com
A. FRIEDR. FLENDER AG Kundenservice Center Ost / Osteuropa	Schlossallee 8	13156 Berlin	Tel.: (0 30) 91 42 50 58 Fax: (0 30) 47 48 79 30	ksc.ost@flender.com www.flender.com
A. FRIEDR. FLENDER AG Werk Friedrichsfeld	Am Industriepark 2	46562 Voerde	Tel.: (0 28 71) 92 - 0 Fax: (0 28 71) 92 - 25 96	contact@flender.com www.flender.com
A. FRIEDR. FLENDER AG Getriebewerk Penig	Thierbacher Straße 24 09322 Penig	Postfach 44/45 09320 Penig	Tel.: (03 73 81) 60 Fax: (03 73 81) 8 02 86	ute.tappert@flender.com www.flender.com
A. FRIEDR. FLENDER AG Kupplungswerk Mussum	Industriepark Bocholt Schlavenhorst 100	46395 Bocholt	Tel.: (0 28 71) 92 - 28 68 Fax: (0 28 71) 92 - 25 79	couplings@flender.com www.flender.com
A. FRIEDR. FLENDER AG FLENDER GUSS	Obere Hauptstraße 228 - 230	09228 Chemnitz/ Wittgensdorf	Tel.: (0 37 22) 64 - 0 Fax: (0 37 22) 94 - 1 38	flender.guss@flender-guss.com www.flender-guss.de
WINERGY AG	Am Industriepark 2 46562 Voerde	Postfach 201160 46553 Voerde	Tel.: (0 28 71) 9 24 Fax: (0 28 71) 92 - 24 87	info@winergy-ag.com www.winergy-ag.com
FLENDER TÜBINGEN GMBH	Bahnhofstraße 40 - 44 72072 Tübingen	Postfach 1709 72007 Tübingen	Tel.: (0 70 71) 7 07 - 0 Fax: (0 70 71) 7 07 - 4 00	sales-motox@flender-motox.com www.flender.com
LOHER GMBH	Hans-Loher-Straße 32 94099 Ruhstorf	Postfach 1164 94095 Ruhstorf	Tel.: (0 85 31) 3 90 Fax: (0 85 31) 3 94 37	info@loher.de www.loher.de
A. FRIEDR. FLENDER AG FLENDER SERVICE INTERNATIONAL	Am Industriepark 2 46562 Voerde	Postfach 201160 46553 Voerde	Tel.: (0 28 71) 92 - 22 10 Fax: (0 28 71) 92 - 13 47	infos@flender-service.com www.flender-service.com
	Werk Herne Südstraße 111 44625 Herne	Postfach 101720 44607 Herne	Tel.: (0 23 23) 9 40 - 0 Fax: (0 23 23) 9 40 - 3 33	infos@flender-service.com www.flender-service.com
	24h Service Hotline		+49 (0) 17 22 81 01 00	
	Vertriebsbüro Penig Thierbacher Straße 24 09322 Penig	Postfach 44/45 09320 Penig	Tel.: (03 73 81) 61 - 5 20 Fax: (03 73 81) 61 - 4 88	infos@flender-service.com www.flender-service.com

Diese technische Unterlage hat gesetzlichen Schutz (DIN 34)

EUROPE

AUSTRIA	Flender Ges.m.b.H.	Industriezentrum Nö-Süd Strasse 4, Objekt 14 Postfach 132	2355 Wiener Neudorf	Phone: +43 (0) 22 36 - 6 45 70 Fax: +43 (0) 22 36 - 6 45 70 10	office@flender.at www.flender.at
BELGIUM & LUXEMBOURG	N.V. Flender Belge S.A.	Cyriel Buyssestraat 130	1800 Vilvoorde	Phone: +32 (0) 2 - 2 53 10 30 Fax: +32 (0) 2 - 2 53 09 66	sales@flender.be
BULGARIA	Auto-Profi N GmbH	52, Alabin Str.	1000 Sofia	Phone: +359 (0) 2 - 9 80 66 06 Fax: +359 (0) 2 - 9 80 33 01	flender@auto-profi.com
CROATIA/SLOVENIA BOSNIA-HERZEGOVINA	HUM - Naklada d.o.o.	Mandroviceva 3a	10000 Zagreb	Phone: +385 (0) 1 - 2 30 60 25 Fax: +385 (0) 1 - 2 30 60 24	flender@hi.htnet.hr
CZECH REPUBLIC	A. Friedr. Flender AG	Branch Office Fibichova 218	27601 Melnik	Phone: +420 315 - 62 12 20 Fax: +420 315 - 62 12 22	info-cz@flender.com
DENMARK	Flender Scandinavia A/S	Rugmarken 35 B	3520 Farum	Phone: +45 - 70 22 60 03 Fax: +45 - 44 99 16 62	kontakt@ flenderscandinavia.com www.flenderscandinavia.com
ESTHONIA / LATVIA LITHUANIA	Addinol Mineralöl Marketing OÜ	Suur-Söjamäe 32	11415 Tallinn (Esthonia)	Phone: +372 (0) 6 - 27 99 99 Fax: +372 (0) 6 - 27 99 90	flender@addinol.ee www.addinol.ee
FINLAND	Flender Oy	Ruosilantie 2 B	00390 Helsinki	Phone: +358 (0) 9 - 4 77 84 10 Fax: +358 (0) 9 - 4 36 14 10	webmaster@flender.fi www.flender.fi
FRANCE	Flender S.a.r.l.	Head Office 3, rue Jean Monnet - B.P. 5	78996 Elancourt Cedex	Phone: +33 (0) 1 - 30 66 39 00 Fax: +33 (0) 1 - 30 66 35 13	sales@flender.fr
	Flender S.a.r.l	Sales Office Agence de Lyon Parc Inopolis, Route de Vourles	69230 Saint Genis Laval	Phone: +33 (0) 4 - 72 83 95 20 Fax: +33 (0) 4 - 72 83 95 39	sales@flender.fr
FRANCE	Flender-Graffenstaden SA	1, rue du Vieux Moulin B.P.84	67400 Illkirch - Graffenstaden 67402 Illkirch - Graffenstaden	Phone: +33 (0) 3 - 88 67 60 00 Fax: +33 (0) 3 - 88 67 06 17	flencomm@flender-graff.com
GREECE	Flender Hellas Ltd.	2, Delfon str.	11146 Athens	Phone: +30 210 - 2 91 72 80 Fax: +30 210 - 2 91 71 02	flender@otenet.gr
HUNGARY	Wentech Kft.	Bécsi Út 3-5	1023 Budapest	Phone: +36 (0) 1 - 3 45 07 90 Fax: +36 (0) 1 - 3 45 07 92	flender@monornet.hu jambor.laszlo@axelero.hu
ITALY	Flender Cigala S.p.A.	Parco Tecnologico Manzoni Palazzina G Viale delle industrie, 17	20040 Caponago (MI)	Phone: +39 (0) 02 - 95 96 31 Fax: +39 (0) 02 - 95 74 39 30	info@flendercigala.it
THE NETHERLANDS	Flender Nederland B.V.	Lage Brink 5-7 Postbus 1073	7317 BD Apeldoorn 7301 BH Apeldoorn	Phone: +31 (0) 55 - 5 27 50 00 Fax: +31 (0) 55 - 5 21 80 11	sales@flender.nl www.flender.nl
THE NETHERLANDS	Bruinhof B.V.	Boterdiep 37 Postbus 9607	3077 AW Rotterdam 3007 AP Rotterdam	Phone: +31 (0) 10 - 4 97 08 08 Fax: +31 (0) 10 - 4 82 43 50	info@bruinhof.nl www.bruinhof.nl
NORWAY	Flender Scandinavia A/S	Rugmarken 35 B	3520 Farum	Phone: +45 - 70 22 60 03 Fax: +45 - 44 99 16 62	kontakt@ flenderscandinavia.com www.flenderscandinavia.com
POLAND	A. Friedr. Flender AG	Branch Office Przedstawicielstwo w Polsce ul. Wyzwolenia 27	43-190 Mikolów	Phone: +48 (0) 32 - 2 26 45 61 Fax: +48 (0) 32 - 2 26 45 62	flender@pro.onet.pl www.flender.pl
PORTUGAL	Rodamientos FEYC, S.A	R. Jaime Lopes Dias, 1668 CV	1750-124 Lissabon	Phone: +351 (0) 21 - 7 54 24 10 Fax: +351 (0) 21 - 7 54 24 19	info@rfportugal.com
ROMANIA	CN Industrial Group srl	B-dul Garii Obor nr. 8D Sector 2	021747 Bucuresti	Phone: +40 (0) 21 - 2 52 98 61 Fax: +40 (0) 21 - 2 52 98 60	office@flender.ro
RUSSIA	Flender OOO	Tjuschina 4-6	191119 St. Petersburg	Phone: +7 (0) 8 12 - 3 20 90 34 Fax: +7 (0) 8 12 - 3 20 90 82	flendergus@mail.spbnit.ru
SLOVAKIA	A. Friedr. Flender AG	Branch Office Vajanského 49, P.O. Box 286	08001 Presov	Phone: +421 (0) 51 - 7 70 32 67 Fax: +421 (0) 51 - 7 70 32 67	micenko.flender@nextra.sk
SPAIN	Flender Ibérica S.A.	Poligono Industrial San Marcos Calle Morse, 31 (Parcela D-15)	28906 Getafe - Madrid	Phone: +34 (0) 91 - 6 83 61 86 Fax: +34 (0) 91 - 6 83 46 50	f-iberica@flender.es www.flender.es
SWEDEN	Flender Scandinavia	Äsenvägen 2	44339 Lerum	Phone: +46 (0) 302 - 1 25 90 Fax: +46 (0) 302 - 1 25 56	kontakt@ flenderscandinavia.com www.flenderscandinavia.com
SWITZERLAND	Flender AG	Zeughausstr. 48	5600 Lenzburg	Phone: +41 (0) 62 - 8 85 76 00 Fax: +41 (0) 62 - 8 85 76 76	info@flender.ch www.flender.ch
TURKEY	Flender Güc Aktarma Sistemleri Sanayi ve Ticaret Ltd. Sti.	IMES Sanayi, Sitesi E Blok 502, Sokak No.22	34776 Dudullu - Istanbul	Phone: +90 (0) 2 16 - 4 66 51 41 Fax: +90 (0) 2 16 - 3 64 59 13	cuzkan@flendertr.com www.flendertr.com
UKRAINE	DIV-Deutsche Industrievertretung	Prospect Pobedy 44	03057 Kiev	Phone: +380 (0) 44 - 2 30 29 43 Fax: +380 (0) 44 - 2 30 29 30	flender@div.kiev.ua
UNITED KINGDOM & EIRE	Flender Power Transmission Ltd.	Thornbury Works, Leeds Road	Bradford West Yorkshire BD3 7EB	Phone: +44 (0) 12 74 - 65 77 00 Fax: +44 (0) 12 74 - 66 98 36	info@flender-power.co.uk www.flender-power.co.uk
SERBIA-MONTENEGRO ALBANIA MACEDONIA	G.P.Inzenjering d.o.o.	III Bulevar 54/19	11070 Novi Beograd	Phone: +381 (0) 11 - 60 44 73 Fax: +381 (0) 11 - 3 11 67 91	flender@eunet.yu

Diese technische Unterlage hat gesetzlichen Schutz (DIN 34)

AFRICA					
NORTH AFRICAN COUNTRIES	Flender S.a.r.l.	3, rue Jean Monnet - B.P. 5	78996 Elancourt Cedex	Phone: +33 (0) 1 - 30 66 39 00 Fax: +33 (0) 1 - 30 66 35 13	sales@flender.fr
EGYPT	Sons of Farid Hassanen	81 Matbaa Ahlia Street	Boulac 11221, Cairo	Phone: +20 (0) 2 - 5 75 15 44 Fax: +20 (0) 2 - 5 75 17 02	hussein@sonfarid.com
SOUTH AFRICA	Flender Power Transmission (Pty.) Ltd.	Head Office Cnr. Furnace St & Quality Rd. P.O. Box 131	Isando - Johannesburg Isando 1600	Phone: +27 (0) 11 - 5 71 20 00 Fax: +27 (0) 11 - 3 92 24 34	sales@flender.co.za www.flender.co.za
	Flender Power Transmission (Pty.) Ltd.	Sales Offices Unit 3 Marconi Park, 9 Marconi Crescent, Montague Gardens, P.O. Box 37291	Cape Town Chempet 7442	Phone: +27 (0) 21 - 5 51 50 03 Fax: +27 (0) 21 - 5 52 38 24	sales@flender.co.za
	Flender Power Transmission (Pty.) Ltd.	Unit 3 Goshawk Park Falcon Industrial Estate P.O. Box 1608	New Germany - Durban New Germany 3620	Phone: +27 (0) 31 - 7 05 38 92 Fax: +27 (0) 31 - 7 05 38 72	sales@flender.co.za
	Flender Power Transmission (Pty.) Ltd.	9 Industrial Crescent, Ext. 25 P.O. Box 17609	Witbank Witbank 1035	Phone: +27 (0) 13 - 6 92 34 38 Fax: +27 (0) 13 - 6 92 34 52	sales@flender.co.za
	Flender Power Transmission (Pty.) Ltd.	Unit 14 King Fisher Park, Alton Cnr. Ceramic Curve & Alumina Allee, P.O. Box 101995	Richards Bay Meerensee 3901	Phone: +27 (0) 35 - 7 51 15 63 Fax: +27 (0) 35 - 7 51 15 64	sales@flender.co.za
AMERICA					
ARGENTINA	Chilicote S.A.	Avda. Julio A. Roca 546	C 1067 ABN Buenos Aires	Phone: +54 (0) 11 - 43 31 66 10 Fax: +54 (0) 11 - 43 31 42 78	chilicote@chilicote.com.ar
BRASIL	Flender Brasil Ltda.	Head Office Rua Quatorze, 60 Cidade Industrial	32210 - 660 Contagem - MG	Phone: +55 (0) 31 - 33 69 20 00 Fax: +55 (0) 31 - 33 31 18 93	vendas@flenderbrasil.com
	Flender Brasil Ltda.	Sales Offices Rua James Watt, 152 conjunto 142 - Brooklin Novo	04576 - 050 São Paulo - SP	Phone: +55 (0) 11 - 55 05 99 33 Fax: +55 (0) 11 - 55 05 30 10	flesao@uol.com.br
	Flender Brasil Ltda.	Rua Campos Sales, 1095 sala 14 - centro	14015 - 110 Ribeirão Preto - SP	Phone: +55 (0) 16 - 6 35 15 90 Fax: +55 (0) 16 - 6 35 11 05	flender.ribpreto@uol.com.br
	Flender Brasil Ltda.	Rua da Mitra - quadra 30 - lote16 Edifício Cristal - sala 207 Bairro Renascença	65075 - 770 São Luis - MA	Phone: +55 (0) 98 - 32 25 84 92 Fax: +55 (0) 98 - 32 25 84 93	flenderslz@uol.com.br
	Flender Brasil Ltda.	Rua Padre Anchieta, 1691 conjunto 1110 - Bairro Bigorrilho	80730 - 000 Curitiba - PR	Phone: +55 (0) 41 - 3 36 28 49 Fax: +55 (0) 41 - 3 36 28 49	quality.engineer@bol.com.br
	Flender Brasil Ltda.	Rua José Alexandre Buaiz, 160 sala 1017 - Enseada do Suá	29050 - 545 Vitória - ES	Phone: +55 (0) 27 - 32 24 37 35 Fax: +55 (0) 27 - 32 24 37 36	flender.vitoria@uol.com.br
CANADA	Flender Power Transmission Inc.	215 Shields Court, Units 4-6	Markham Ontario L3R 8V2	Phone: +1 (0) 9 05 - 3 05 10 21 Fax: +1 (0) 9 05 - 3 05 10 23	info@flenderpti.com www.flender.ca
CHILE / ARGENTINA BOLIVIA / ECUADOR PARAGUAY URUGUAY	Flender Cono Sur Ltda.	Avda. Galvarino Gallardo 1534	Providencia, Santiago	Phone: +56 (0) 2 - 2 35 32 49 Fax: +56 (0) 2 - 2 64 20 25	flender@flender.cl www.flender.cl
COLOMBIA	A.G.P. Representaciones Ltda.	Flender Liaison Office Colombia Av Boyaca No. 23 A 50 Bodega UA 7-1	Bogotá	Phone: +57 (0) 1 - 5 70 63 53 Fax: +57 (0) 1 - 5 70 73 35	aguerrero@agp.com.co www.agp.com.co
MEXICO	Flender de Mexico S.A. de C.V.	Head Office 17, Pte, 713 Centro	72000 Puebla	Phone: +52 (0) 2 22 - 2 37 19 00 Fax: +52 (0) 2 22 - 2 37 11 33	szugasti@flendermexico.com www.flendermexico.com
	Flender de Mexico S.A. de C.V.	Sales Offices Lago Nargis No. 38 Col. Granada	11520 Mexico, D.F.	Phone: +52 (0) 55 - 52 54 30 37 Fax: +52 (0) 55 - 55 31 69 39	info@flendermexico.com
	Flender de Mexico S.A. de C.V.	Ave. San Pedro No. 231-5 Col. Miravalle	64660 Monterrey, N.L.	Phone: +52 (0) 81 - 83 63 82 82 Fax: +52 (0) 81 - 83 63 82 83	info@flendermexico.com
PERU	Flender Cono Sur Ltda.	Avda. Galvarino Gallardo 1534	Providencia, Santiago	Phone: +56 (0) 2 - 2 35 32 49 Fax: +56 (0) 2 - 2 64 20 25	flender@flender.cl www.flender.cl
USA	Flender Corporation	950 Tollgate Road P.O. Box 1449	Elgin, IL. 60123	Phone: +1 (0) 8 47 - 9 31 19 90 Fax: +1 (0) 8 47 - 9 31 07 11	flender@flenderusa.com www.flenderusa.com
	Flender Corporation	Service Centers West 4234 Foster Ave.	Bakersfield, CA. 93308	Phone: +1 (0) 6 61 - 3 25 44 78 Fax: +1 (0) 6 61 - 3 25 44 70	flender1@lightspeed.net
VENEZUELA	F. H. Transmisiones S.A.	Calle Johan Schafer o Segunda Calle, Municipio Sucre	Petare, Caracas	Phone: +58 (0) 2 12 - 21 52 61 Fax: +58 (0) 2 12 - 21 18 38	fhtransm@telcel.net.ve www.fhtransmisiones.com

Diese technische Unterlage hat gesetzlichen Schutz (DIN 34)

ASIA

BANGLADESH SRI LANKA	Flender Limited	No.2 St. George's Gate Road 5th Floor, Hastings	Kolkata-700022	Phone: +91 (0) 33 - 2 23 05 45 Fax: +91 (0) 33 - 2 23 18 57	flender@flenderindia.com
PEOPLE'S REPUBLIC OF CHINA	Flender Power Transmission (Tianjin) Co., Ltd.	Head Office Shuanghu-Shuangchen Rd. West, Beichen Economic Development Area (BEDA)	Tianjin 300400	Phone: +86 (0) 22 - 26 97 20 63 Fax: +86 (0) 22 - 26 97 20 61	flender@flendertj.com www.flendertj.com
	Flender Power Transmission (Tianjin) Co., Ltd.	Sales Offices C-414, Lufthansa Center 50 Liangmaqiao Rd. Chaoyang District	Beijing 100016	Phone: +86 (0) 10 - 64 62 21 51 Fax: +86 (0) 10 - 64 62 21 43	beijing@flenderprc.com.cn
	Flender Power Transmission (Tianjin) Co., Ltd.	1101-1102 Harbour Ring Plaza 18 Xizang Zhong Rd.	Shanghai 200001	Phone: +86 (0) 21 - 53 85 31 48 Fax: +86 (0) 21 - 53 85 31 46	shanghai@ flenderprc.com.cn
	Flender Power Transmission (Tianjin) Co., Ltd.	Rm.1503, Jianyin Building 709 Jianshedadao, Hankou	Wuhan 430015	Phone: +86 (0) 27 - 85 48 67 15 Fax: +86 (0) 27 - 85 48 68 36	wuhan@flenderprc.com.cn
	Flender Power Transmission (Tianjin) Co., Ltd.	Rm.2802, Guangzhou International Electronics Tower 403 Huanshi Rd. East	Guangzhou 510095	Phone: +86 (0) 20 - 87 32 60 42 Fax: +86 (0) 20 - 87 32 60 45	guangzhou@ flenderprc.com.cn
	Flender Power Transmission (Tianjin) Co., Ltd.	G-6 / F Guoxin Mansion 77 Xiyu Street	Chengdu 610015	Phone: +86 (0) 28 - 86 19 83 72 Fax: +86 (0) 28 - 86 19 88 10	chengdu@flenderprc.com.cn
	Flender Power Transmission (Tianjin) Co., Ltd.	Rm.3-705, Tower D City Plaza Shenyang 206 Nanjing Street (N) Heping District	Shenyang 110001	Phone: +86 (0) 24 - 23 34 20 48 Fax: +86 (0) 24 - 23 34 20 46	shenyang@flenderprc.com.cn
	Flender Power Transmission (Tianjin) Co., Ltd.	Rm.302, Shanzi Zhong Da International Mansion 30 Southern Rd.	Xi'an 710002	Phone: +86 (0) 29 - 87 20 32 68 Fax: +86 (0) 29 - 87 20 32 04	xian@flenderprc.com.cn
	Flender Power Transmission (Tianjin) Co., Ltd.	Rm.23E, Xinhua Plaza, No.6 Renmin East Rd.	Kunming 650051	Phone: +86 (0) 871 - 3 12 43 68 Fax: +86 (0) 871 - 3 12 45 66	kunming@flenderprc.com.cn
	Flender Power Transmission (Tianjin) Co., Ltd.	Rm.1007, Building A, Golden Center, Jincheng International Plaza, No.68 Jingsan Rd.	Zhengzhou 450008	Phone: +86 (0) 371 - 5 38 80 85 Fax: +86 (0) 371 - 5 38 80 89	zhengzhou@ flenderprc.com.cn
	Flender Power Transmission (Tianjin) Co., Ltd.	Rm.908 (east), No.188 Guangzhou Rd.	Nanjing 210024	Phone: +86 (0) 25 - 83 24 25 50 Fax: +86 (0) 25 - 83 24 48 20	nanjing@flenderprc.com.cn
	Flender Power Transmission (Tianjin) Co., Ltd.	Rm.1408, Pearl River International Building No.99 Xinkai Rd. Xigang District	Dalian 116011	Phone: +86 (0) 411 - 83 77 93 55 Fax: +86 (0) 411 - 83 77 92 19	dalian@flenderprc.com.cn
	Flender Power Transmission (Tianjin) Co., Ltd.	Rm.1401, Tianlin Building Hunan Gold Source Hotel No.279, Second Block Furong Rd.	Changsha 410007	Phone: +86 (0) 731 - 5 16 73 09 Fax: +86 (0) 731 - 5 16 47 46	changsha@ flenderprc.com.cn
INDIA	Flender Limited	Head Office No.2 St. George's Gate Road 5th Floor	Hastings Kolkata - 700022	Phone: +91 (0) 33 - 22 23 05 45 Fax: +91 (0) 33 - 22 23 18 57	flender@flenderindia.com
	Flender Limited	Industrial Growth Centre Rakhajungle	Nimpura Kharagpur - 721302	Phone: +91 (0) 3222 - 23 33 07 Fax: +91 (0) 3222 - 23 33 64	works@flenderindia.com
	Flender Limited	Eastern Regional Sales Office No.2 St. George's Gate Road 5th Floor	Hastings Kolkata - 700022	Phone: +91 (0) 33 - 22 23 05 45 Fax: +91 (0) 33 - 22 23 08 30	ero@flenderindia.com
	Flender Limited	Western Regional Sales Office Plot No. 23, Sector 19-C	Vashi Navi Mumbai - 400705	Phone: +91 (0) 22 - 27 65 72 27 Fax: +91 (0) 22 - 27 65 72 28	wro@flenderindia.com
	Flender Limited	Southern Regional Sales Office 41 Nelson Manickam Road	Aminjikarai Chennai - 600029	Phone: +91 (0) 44 - 23 74 39 21 Fax: +91 (0) 44 - 23 74 39 19	sro@flenderindia.com
	Flender Limited	Northern Regional Sales Office 302 Bhikaji Cama Bhawan 11 Bhikaji Cama Palace	New Delhi - 110066	Phone: +91 (0) 11 - 51 85 96 56 Fax: +91 (0) 11 - 51 85 96 59	nro@flenderindia.com
INDONESIA	Flender Singapore Pte. Ltd.	Representative Office 6-01 Wisma Presisi Jl. Taman Aries Blok A1 No.1	Jakarta Barat 11620	Phone: +62 (0) 21 - 58 90 20 15 Fax: +62 (0) 21 - 58 90 20 19	bobwall@cbn.net.id
IRAN	Cimaghand Co. Ltd.	P.O. Box 15745-493 No.13, 16th East Street Beyhaghi Ave., Argentina Sq.	Tehran 15156	Phone: +98 (0) 21 - 8 73 02 14 Fax: +98 (0) 21 - 8 73 39 70	info@cimaghand.com
ISRAEL	Greenshpon	Boaz 3	34487 Haifa	Phone: +972 (0) 52 - 4 76 14 26 Fax: +972 (0) 4 - 8 14 60 37	ram@greenshpon.de www.greenshpon.co.il
JAPAN	Flender Japan Co., Ltd.	WBG Marive East 21F Nakase 2-6 Mihama-ku, Chiba-shi	Chiba 261-7121	Phone: +81 (0) 43 - 2 13 39 30 Fax: +81 (0) 43 - 2 13 39 55	contact@flender-japan.com
KAZAKHSTAN	KazGate GmbH	Abay ave 143	480009 Almaty	Phone: +7 (0) - 32 72 - 43 39 54 Fax: +7 (0) - 32 72 - 77 90 82	flender@kazgate.de
KOREA	Flender Ltd.	7th Fl. Dorim Bldg. 1823 Bangbae-Dong Seocho-Ku	Seoul 137-060	Phone: +82 (0) 2 - 34 78 63 37 Fax: +82 (0) 2 - 34 78 63 45	sales@flender-korea.com www.flender-korea.com
KUWAIT	South Gulf Company	Al-Showaikh Ind. Area P.O. Box 26229	Safat 13123	Phone: +965 (0) - 4 82 97 15 Fax: +965 (0) - 4 82 97 20	adelameen@awalnet.net.sa
LEBANON	Gabriel Acar & Fils s.a.r.l.	Dahr-el-Jamal Zone Industrielle, Sin-el-Fil B.P. 80484	Beyrouth	Phone: +961 (0) 1 - 49 82 72 Fax: +961 (0) 1 - 49 49 71	gacar@beirut.com

Diese technische Unterlage hat gesetzlichen Schutz (DIN 34)

MALAYSIA	Flender Singapore Pte. Ltd.	Representative Office 37 A-2, Jalan PJU 1/39 Dataran Prima	47301 Petaling Jaya Selangor Darul Ehsan	Phone: +60 (0) 3 - 78 80 42 63 Fax: +60 (0) 3 - 78 80 42 73	flender@tm.net.my
PAKISTAN	A. Friedr. Flender AG	Postfach 1364	46393 Bocholt	Phone: +49 (0) 28 71 - 92 22 59 Fax: +49 (0) 28 71 - 92 15 16	ludger.wittag@flender.com
PHILIPPINES	Flender Singapore Pte. Ltd.	Representative Office 28/F, Unit 2814, The Enterprise Centre, 6766 Ayala Avenue corner, Paeso de Roxas	Makati City	Phone: +63 (0) 2 - 8 49 39 93 Fax: +63 (0) 2 - 8 49 39 17	junt@flender.com.ph
BAHRAIN / IRAQ LYBIA / JORDAN OMAN / QATAR U.A.E. / YEMEN	Flender Güc Aktarma Sistemleri Sanayi ve Ticaret Ltd. Sti.	Middle East Sales Office IMES Sanayi Sitesi E Blok 502, Sokak No. 22	34776 Dudullu - Istanbul	Phone: +90 (0) 2 16 - 4 99 66 23 Fax: +90 (0) 2 16 - 3 64 59 13	meso@flendertr.com
SAUDI ARABIA	South Gulf Sands Est.	Bandaria Area, Dohan Bldg. Flat 3/1, P.O. Box 32150	Al-Khobar 31952	Phone: +966 (0) 3 - 8 87 53 32 Fax: +966 (0) 3 - 8 87 53 31	adelameen@awalnet.net.sa
SINGAPORE	Flender Singapore Pte. Ltd.	13 A, Tech Park Crescent	Singapore 637843	Phone: +65 (0) - 68 97 94 66 Fax: +65 (0) - 68 97 94 11	flender@singnet.com.sg www.flender.com.sg
SYRIA	Misrabi Co & Trading	Mezzeh Autostrade Transportation Building 4/A, 5th Floor P.O. Box 12450	Damascus	Phone: +963 (0) 11 - 6 11 67 94 Fax: +963 (0) 11 - 6 11 09 08	ismael.misrabi@gmx.net
TAIWAN	Flender Taiwan Limited	1F, No. 5, Lane 240 Nan Yang Street, Hsichih	Taipei Hsien 221	Phone: +886 (0) 2 - 26 93 24 41 Fax: +886 (0) 2 - 26 94 36 11	flender_tw@flender.com.tw
THAILAND	Flender Singapore Pte. Ltd.	Representative Office Talay-Thong Tower, 53 Moo 9 10th Floor Room 1001 Sukhumvit Rd., T. Tungsukla	A. Sriracha Chonburi 20230	Phone: +66 (0) 38 - 49 51 66 - 8 Fax: +66 (0) 38 - 49 51 69	contact@flender.th.com
VIETNAM	Flender Singapore Pte. Ltd.	Representative Office Suite 22, 16F Saigon Tower 29 Le Duan Street, District 1	Ho Chi Minh City	Phone: +84 (0) 8 - 8 23 62 97 Fax: +84 (0) 8 - 8 23 62 88	flender_vn@flender.com.vn
AUSTRALIA					
	Flender (Australia) Pty. Ltd.	Head Office 9 Nello Place, P.O. Box 6047 Wetherill Park	N.S.W. 2164, Sydney	Phone: +61 (0) 2 - 97 56 23 22 Fax: +61 (0) 2 - 97 56 48 92	sales@flender.com.au www.flender.com.au
	Flender (Australia) Pty. Ltd.	Sales Offices Suite 3, 261 Centre Rd. Bentleigh	VIC 3204, Melbourne	Phone: +61 (0) 3 - 95 57 08 11 Fax: +61 (0) 3 - 95 57 08 22	sales@flender.com.au
	Flender (Australia) Pty. Ltd.	Suite 5, 1407 Logan Rd. Mt. Gravatt	QLD 4122, Brisbane	Phone: +61 (0) 7 - 34 22 23 89 Fax: +61 (0) 7 - 34 22 24 03	sales@flender.com.au
	Flender (Australia) Pty. Ltd.	Suite 2 403 Great Eastern Highway	W.A. 6104 Redcliffe - Perth	Phone: +61 (0) 8 - 94 77 41 66 Fax: +61 (0) 8 - 94 77 65 11	sales@flender.com.au
NEW ZEALAND	Flender (Australia) Pty. Ltd.	9 Nello Place, P.O. Box 6047 Wetherill Park	N.S.W. 2164, Sydney	Phone: +61 (0) 2 - 97 56 23 22 Fax: +61 (0) 2 - 97 56 48 92	sales@flender.com.au

Diese technische Unterlage hat gesetzlichen Schutz (DIN 34)

Declaration by the manufacturer

as defined by machinery directive 98/37/EC Annex II B

We hereby declare that the products supplied by us are meant for being installed in a machine and that their putting into operation is prohibited until it has been ascertained that the machine, in which these components will be installed, corresponds to the regulations of the EC guideline (original version 98/37/EC incl. the further amendments).

This declaration by the manufacturer takes into consideration all harmonized standards - as far as applicable to our products - published by the EC Commission in the Official Journal of the European Community.

Bocholt, 2004-04-06
Date

Signature (Director HDE Engineering)

Diese technische Unterlage hat gesetzlichen Schutz (DIN 34)

General

The electric resistance in the resistance thermometer sensor changes as the temperature fluctuates. This change of resistance on the PT 100 or the converted output signal of the measuring transducer (4 to 20 mA) can be used to measure temperature with an evaluating instrument or to define a switch point by means of limit switches.

Operation

Pt 100 measuring thermometer sensor

The electrical conductivity of metal (here platinum) is based on the mobility of conduction electrons. As the temperature rises, the movement of the atoms in the metal lattice about their rest position intensifies and so obstructs the electrons flowing to the plus pole of a power source. This obstruction sets up a resistance in linear proportion to the temperature.

To generate the output signal a constant test current (approx. 1 mA) is applied to the Pt 100. The resistance in the Pt 100 causes a drop in voltage ($U = R \cdot I$), which can be evaluated.

Measuring transducer

The two-wire measuring transducer is mounted in the J-head only if requested by the customer. It should be noted that here only a single connection is possible.

The measuring transducer converts the temperature-dependent resistance to a standard uniform signal of 4 to 20 mA. This signal can be transmitted over long distances without interference.

Technical Date - Pt 100

– Type of protection Terminal head:	IP 65
– Tolerance class:	DIN IEC 60751 Class B (at 0 °C ±0.3 K, at 100 °C ±0.8 K)
– Ambient temperature range for J head:	–20 °C to +100 °C
– Ambient temperature range for protective tube:	–50 °C to +200 °C
– Test temperature range:	–50 °C to +150 °C

Material

– Terminal head:	GD-AlSi9Cu3
– Protective sleeve for measuring thermometer sensor:	1.4571
– Spring:	wire DIN 2076-A-0.8 (stainless steel)
– Guide tube:	1.4571
– Terminal base:	ceramic
– Adapter:	1.4301
– Gasket	NBR (Perbunan)

Diese technische Unterlage hat gesetzlichen Schutz (DIN 34)

Technical data - Measuring transducer

– Measuring input:	Pt 100 (DIN EN 60751)
– Measuring range:	–50 °C to +150 °C
– Ambient temperature:	–20 °C to +85 °C
– Terminal type:	two-wire
– Minimum measuring range:	25 K
– Maximum measuring range:	1050 K
– Sensor line resistance with three-wire connection:	≤ 11 Ω per line
– Sensor line resistance with two-wire connection:	0 Ω per line resistance
– Sensor current:	≤ 0,5 mA
– Measuring rate:	continuous measurement, as signal path analog

Measuring circuit monitoring system

– Drop below range:	falling to ≤ 3.6 mA
– Rise over range:	rising to ≥ 22 mA ... < 28 mA (typical 24 mA)
– Probe short circuit:	≤ 3,6 mA
– Probe and line break:	positive: ≥ 22 mA ... < 28 mA (typical 24 mA) negative: ≤ 3,6 mA

Output

– Output signal:	impressed DC 4 ... 20 mA
– Transient response:	temperature-linear
– Transmission accuracy:	≤ ± 0.1 %
– Attenuation of residual ripple of feed voltage:	40 dB
– Working resistance (Rb):	$RB = \frac{U_B - 7{,}5\ V}{22mA}$
– Influence of working resistance:	≤ ± 0,02 % / 100 Ω relative to measuring range final value of 20 mA
– Adjustment time with temperature change:	≤ 10 ms
– Balancing conditions:	DC 24 V / approx. 22 °C
– Balancing accuracy:	≤ ± 0.2 % relative to measuring range final value of 20 mA

Voltage supply

– Voltage supply (Ub):	DC 7.5 ... 30 V
– Pole confusion protection:	yes
– Voltage supply influence:	≤ 0.01 % / V deviation of 24 V relative to measuring range final value of 20 mA

Environmental influences

– Operating temperature range:	–40 to +85 °C
– Temperature influence:	≤ 0.01 % / K deviation of 22 °C relative to measuring range final value of 20 mA
– Climate resistance:	rel. humidity ≤ 95 % on annual average without dew contact
– Vibration strength:	acc. to GL characteristic 2
– EMV:	EN 61326

Housing

– Material:	Polycarbonate (encapsulated)
– Screw connection:	≤ 1.5 mm^2
– Assembly:	in terminal head Form J
– Mounting position:	any
– Weight:	approx. 12 g

Diese technische Unterlage hat gesetzlichen Schutz (DIN 34)

Connection

The customer can minimise measuring inaccuracies by using multiple wires. At Flender, as a rule, a 3- or 4-wire arrangement from an additional terminal box is provided for (Fig. 1, 2). At the customer's specific request, the 3/4-wire arrangement can be used from the J-head (Figure 4, 5). Through lack of space, however, the 4-wire arrangement is possible only with a single connection (Fig. 5).

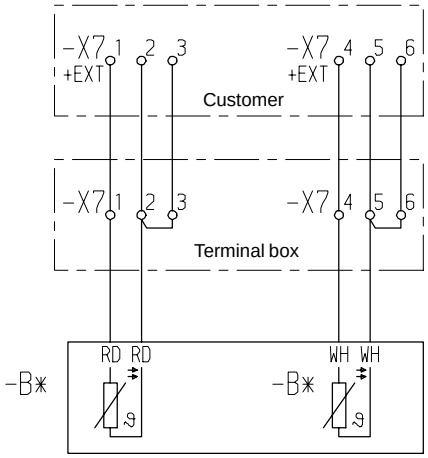

Resistance thermometer

Fig. 1: 3-wire arrangement from terminal box

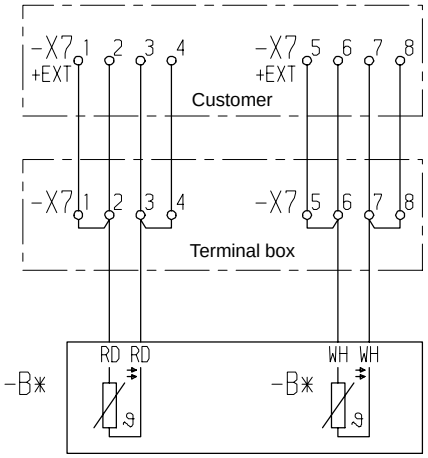

Resistance thermometer

Fig. 2: 4-wire arrangement from terminal box

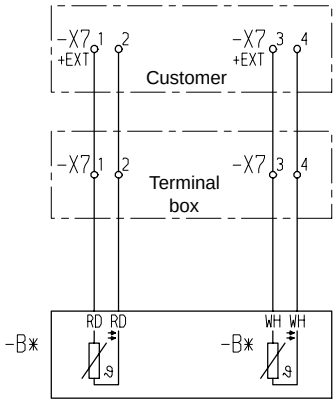

Resistance thermometer

Fig. 3: 2-wire circuit from terminal head of Pt 100

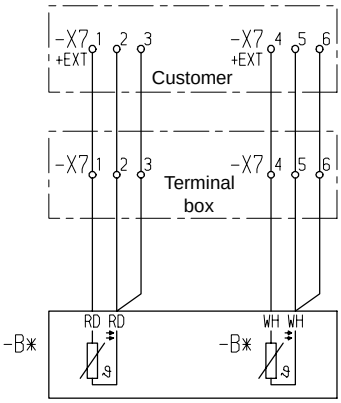

Resistance thermometer

Fig. 4: 3-wire circuit from terminal head of Pt 100

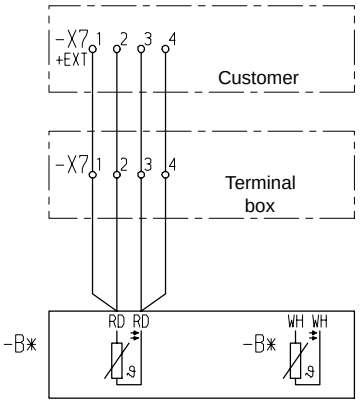

Resistance thermometer

Fig. 5: 4-wire circuit from terminal head of Pt 100

Connection for measuring transducer

	Connection for		Connection values		
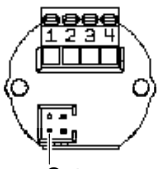 Setup		Voltage supply DC 7.5 ... 30 V Current output 4 ... 20 mA	+1 -2	$R_B = \frac{U_b - 7.5\ V}{22mA}$ R_B = Working resistance U_b = Voltage supply	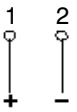
	Analog inputs				
		Resistance thermometer in two-wire circuit	3 4	series $R_L = 0\ \Omega$	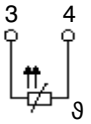

Types

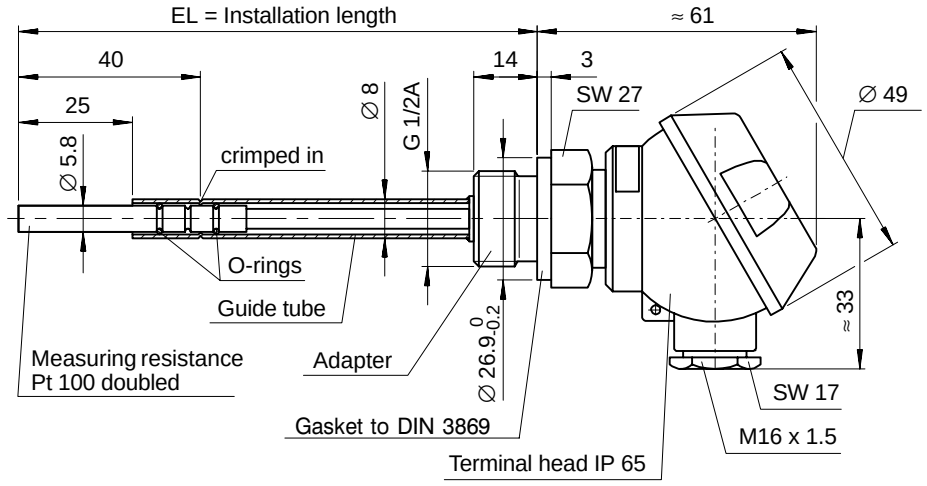

Fig. 6: Resistance thermometer F 6100-1

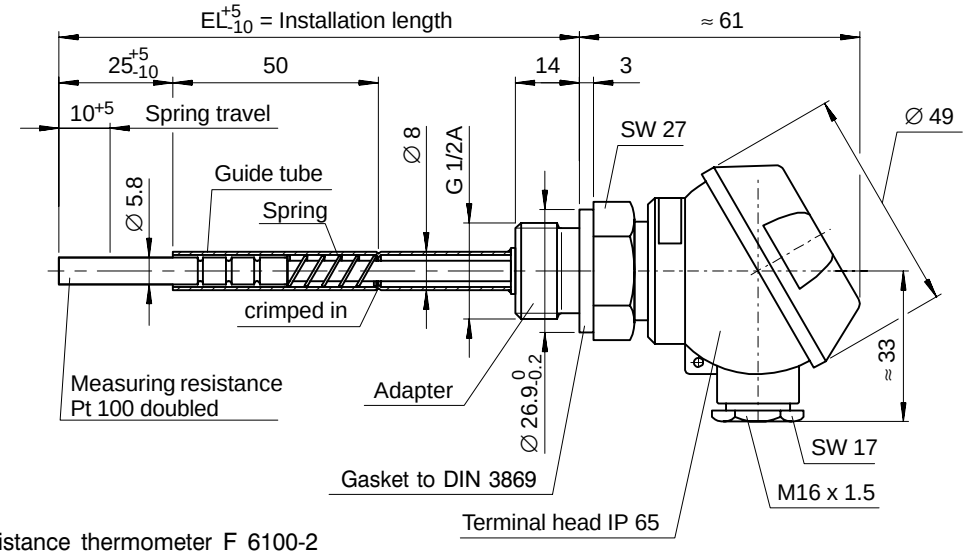

Fig. 7: Resistance thermometer F 6100-2

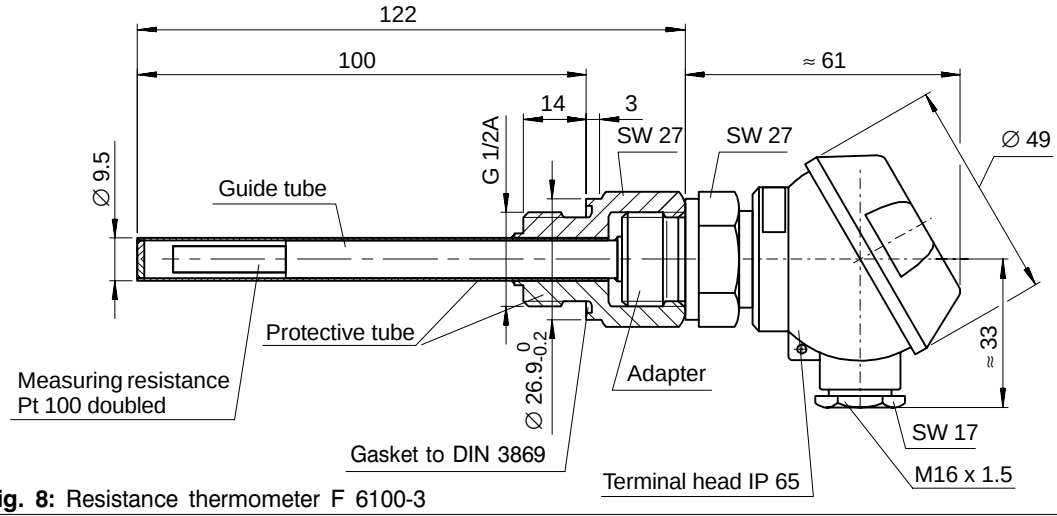

Fig. 8: Resistance thermometer F 6100-3

Diese technische Unterlage hat gesetzlichen Schutz (DIN 34)

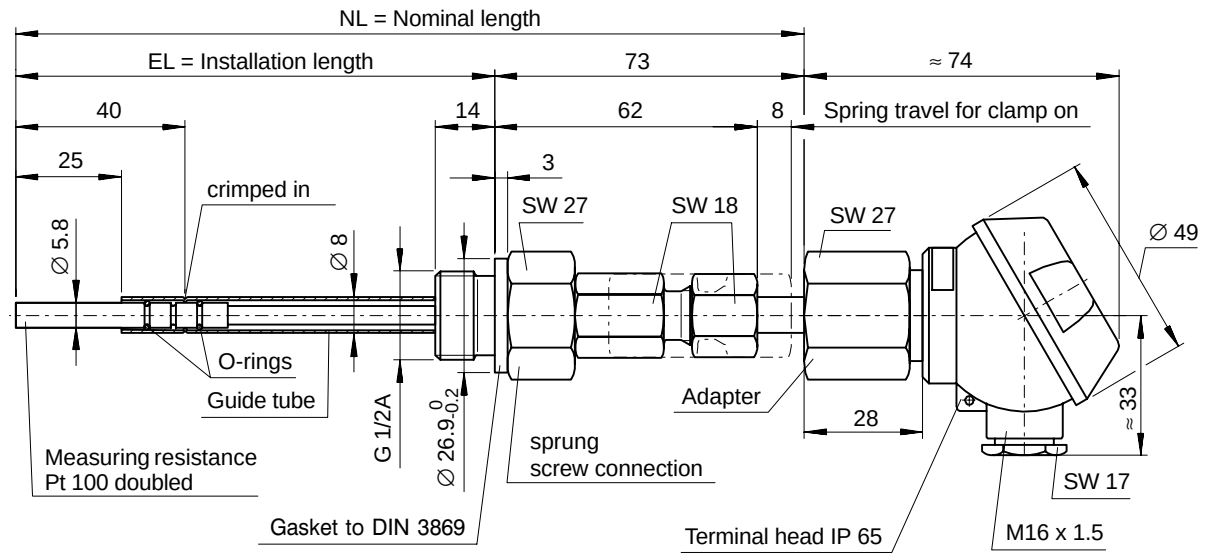

Fig. 9: Resistance thermometer F 6100-4

Adjustment by means of sprung screw connection

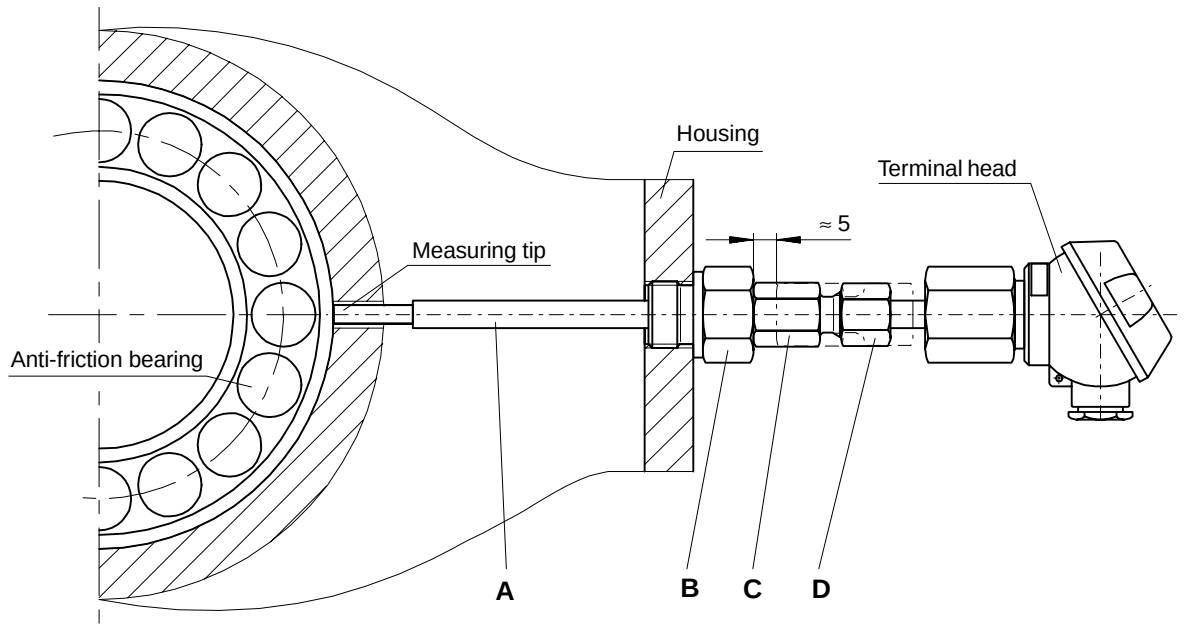

a) Insert guide tube ”A” into hole in housing until the measuring tip of the resistance thermometer makes contact.

b) Screw screw connection ”B” into the housing as far as it will go.

c) Pull out screw connection ”C” approx. 5 mm towards the terminal head. Then lock nut ”D” with screw connection ”C”. This ensures that the pretensioned spring keeps the measuring tip permanently in contact with the part to be measured.

Diese technische Unterlage hat gesetzlichen Schutz (DIN 34)

These operating instructions are binding for breathers according to FLENDER works standard W 5122.

Mounting

The thread of the filter has to be coated with sealing compound LOCTITE 572 before screwing it into the female thread.

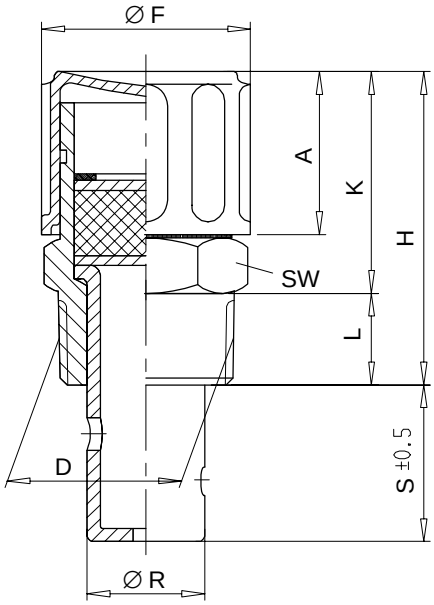

D	SW	L	K	H	A	F	R	S
R 1/4	22	8	23	35	19	28	8	16.5
R 1/2	22	12	26	38	19	28	10	17
R 3/4	27	14	32	46	25	32	18	23

Material: Stainless steel
Tubes made out of oil-resistant plastics

Temperature resistance: up to 120 °C

Design: Tapered thread acc. to DIN 2999 (Taper 1 : 16)

Diese technische Unterlage hat gesetzlichen Schutz (DIN 34)

RHD/V/Z – Non-return valve

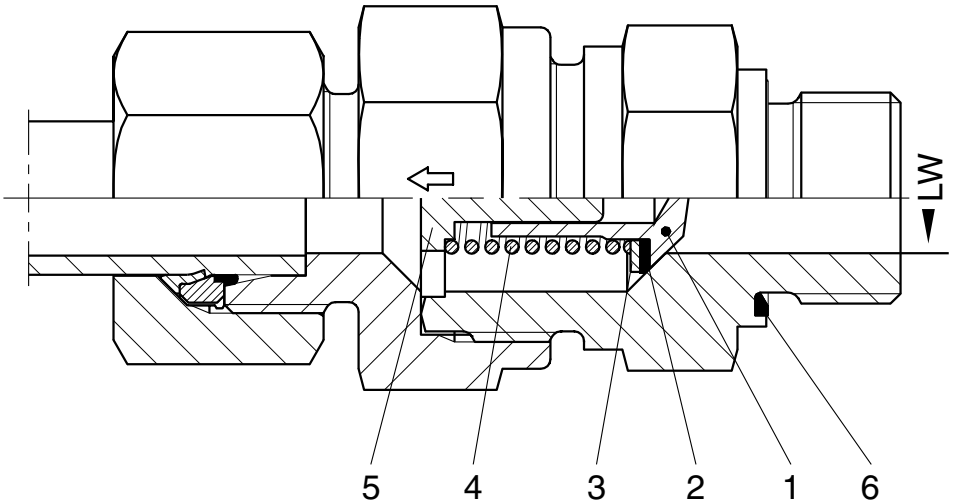

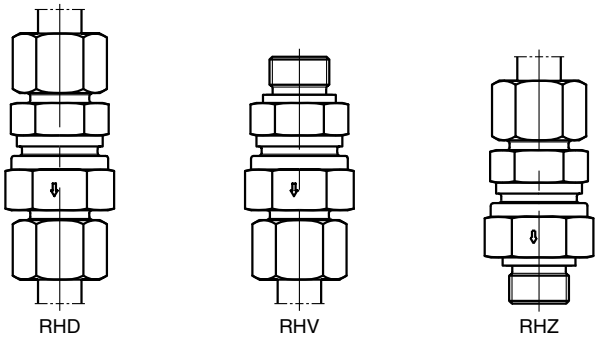

Item 1: cone
Item 2: packing disc
Item 3: top disc
Item 4: spring
Item 5: passage disc with guide pin
Item 6: Eolastic-sealing

LW = Inlet diameter (mm)

Characteristics:

Sealing achieved by using a 90° cone with a packing washer of synthetic material. Valve has a lift stop therefore safe free outlet. Shock-absorbing and muffled opening. No reduction of cross section. Maximum flow velocity not more than 8 m/sec (for higher flow velocities special tests are required). Sealing of male stud thread by Eolastic soft seal with types RHV and RHZ.

Opening pressure:

Approx. 1 bar (on request also 0.5–2 and 3 bar are available; please specify for order). For pressure see appropriate tables. Tolerance of opening pressure: ±20 %.

Material:

Steel zinc-plated (A3C), seals of NBR (Perbunan).
On request of FPM (Viton).
Stainless steel (71), seals of FPM (Viton).
Brass-CuZn35Ni2 (SoMs59 material 2.0540) with internal parts of 1.4571 (on request).

Assembly:

See Parker EO assembly instructions.
Packaging:
All non-return valves dust-proof packed.

Purpose:

Hydraulic oil, not easily inflammable hydraulic fluids (but not HFC group; for HFD group; seals made of FPM are necessary), compressed air (please indicate with order).
Not useable for steam, oxygen or combustible/explosive gases.
Corrosion inducing media. For use with water, please indicate kind of water and any additives.

Safety Instructions

EO Tube Fittings are Safe High-Pressure Connections.

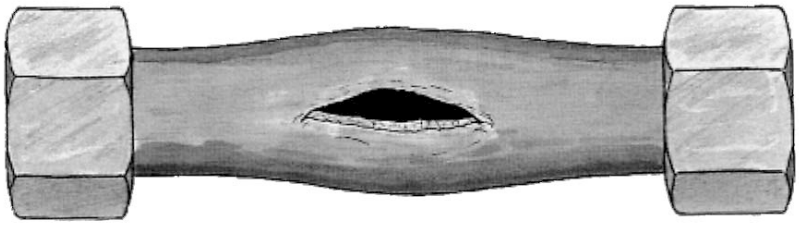

A carefully assembled EO fitting will provide a sealed joint even up to tube burst. Experience has shown that break-downs, tightening-up and leaks can be avoided by following the safety instructions. Please review your fitting procedures.

Safety Instructions Assembly

- During a progressive ring and EO-2 fitting assembly the tube has to bottom up in the stud or in the tool. Without tube bottoming the ring cannot bite sufficiently. Under load the connection can fail due to tube shear.
- Uncompletely assembly will reduce the pressure and vibration capability of a fitting. It can reduce the life cycle time of a connection and leakage can occur. In extreme cases the connection can fail due to tube shear or tube crack. Presetted progressive ring fittings need a final assembly according to assembly instructions.
- After opening a tube connection, the unit has to be retighten with the same force used during prior assembly. Undertightening can result in leakage and can reduce the vibration capability.
  Overtightening can reduce the possibilities of repeated assembly. In extreme cases the components can be destroyed.
- Stainless steel progressive ring fittings have to be presetted in hardened tools. Otherwise the conection may fail under load due to tube shear.

General safety instructions

- EO tube fittings are intended solely for connections for fluid applications.
- Observe tube recommendations. Non-standard materials or tolerances lead to incorrect fitting.
- Do not use bearing balls, fitting pins or tapered pins instead of EO plugs (VKA) as blanking parts for 24° cones.
- Do not assemble progressive rings and functional nuts on selfmade standpipe stud ends. There is a risk of false assembly with the result of connection shear under load.
- The use of steel cutting rings for stainless steel tubes or other unauthorised tool combinations leads to incorrect assembly.
- Tube connection and fitting body once assembled, should remain together. Fitting body is to be used once only for pre-assembly.
- Air bleeding of tube fittings which are under pressure can be dangerous.
- Tube under tension can lead to vibration failure. Tube length and bend angles are to be adhered to precisely. Fix tube lines with tube clamps.
- Tubes are not to be clamped to one another but to suitable fixed points. Plate brackets, cable connections and fixing elements are not suitable. Tubes are not mountings on which to integrate other components e.g. filters, ventilators or shut-off valves.
- Prevent oscillation, pressure surges and inherent strain by using flexible hoses for example.
- Under and overtightening of fittings during assembly reduces the capacity for withstanding pressure and vibration loads and therefore reduces the life of the tube fitting. Leaks from the tube can occur under these circumstances.
- When dismantling/transporting and re-assembling, make sure that no dirt enters the system, that the connection elements (threads, sealing surfaces) are not damaged, seals are not lost and tubes are not bent or flattened. We recommend the use of suitable protective caps.
- Disassembled fittings are to be checked for accuracy and damage and replaced if necessary.
- Do not use hand cutters or tube cutters.
- Impurities and swarf can lead to disruptions in the system and leaks.
- The operating parameters given (e.g. pressure, temperature, medium compatibility) are to be adhered to.
- Avoid flow rates > 8 m/s. The resulting forces are high and can destroy the tube lines.
- Relevant guidelines (e.g. CE, ISO, BG, TÜV, DIN) are to be observed.
- Weld fittings are manufactured out of weldable materials. No other fittings are suitable for welding.
- EO Niromont is a high-performance lubricant. The use of other lubricants generally leads to an increase in assembly force.
- The tools and lubricants recommended by EO guarantee safe assembly.
- If tools and assembly equipment of other manufacturers are used, the function and assembly results have to be checked.
- Fittings are to be handled with care.
- Tubelines need to be adapted tension free of the relevant connectors before assembly. An easy turning of the nut is required for the complete thread length. Otherwise leakage can occur. In extreme cases with additional vibrations tube cracks can occur.
- Vibrations have to be clampened by tube clamps. Independant vibration units need to be separated with hoses. Otherwise tube cracks can occur.

In case of doubt please contact your Parker representative!

These operating instructions are binding for oil drain plugs (ball valves with full straightway) to Flender Works Standard W 5100.

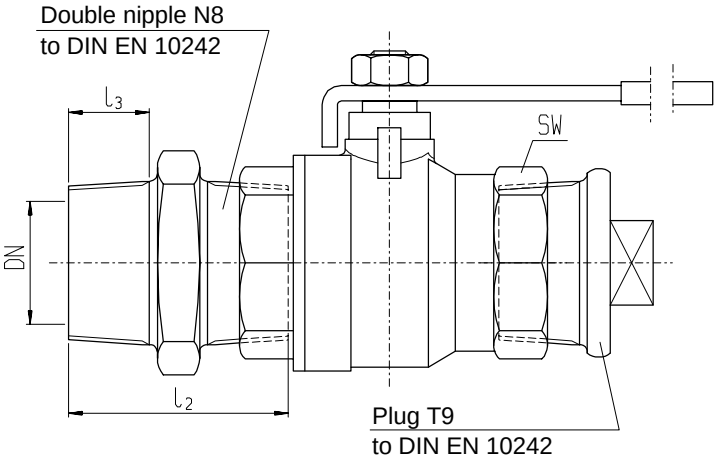

Double parallel nipple and plug with thread sealed with hemp and Fermit.

Fig. 1: Ball valve, complete with double nipple and plug

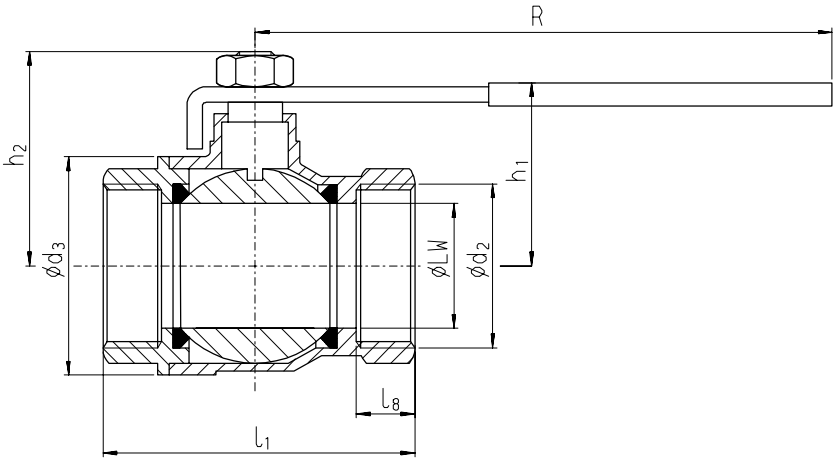

Fig. 2: Component in sectional view

Nominal width of connection DN	Pipe thread d_2	LW	Rated pressure PN bar max.	d_3	h_1	h_2	l_1	l_2	Threaded length l_3	l_8	R	SW	Weight kg approx.
8	G 1/4	9	25	23,5	21	26	44,5	36	9,7	10	86	20,0	0,16
10	G 3/8	10	25	23,5	25	31	44,5	38	10,1	10	86	20,0	0,17
15	G 1/2	14	25	30,0	27	33	50,0	44	13,2	12	86	25,0	0,19
20	G 3/4	19	25	37,0	31	37	55,0	47	14,5	12	106	30,5	0,37
25	G 1	25	25	45,0	35	41	66,0	53	16,8	14	106	37,5	0,58
32	G 1 1/4	32	25	56,5	45	51	80,0	57	19,1	17	148	46,5	0,92
40	G 1 1/2	40	25	70,0	53	60	90,0	59	19,1	17	148	54,0	1,35
50	G 2	50	25	85,0	63	70	108,0	68	23,4	21	152	65,0	2,32

Diese technische Unterlage hat gesetzlichen Schutz (DIN 34)

Material:	Housing:	nickel-plated brass
	Ball:	chromium-plated brass
	Valve key:	galvanized steel with red plastic sheathing
	Ball seal:	Teflon (PTFE)
	Double nipple:	GTW35-V
	Plug:	GTW35-V

Operable temperature range: from -20 °C to max. +170 °C

If oil drain plugs are combined with screw connections, a suitable ring must be provided. This ring bridges the too short thread in the oil drain plug and brings the screw connection into contact on the end face (see Fig. 3).

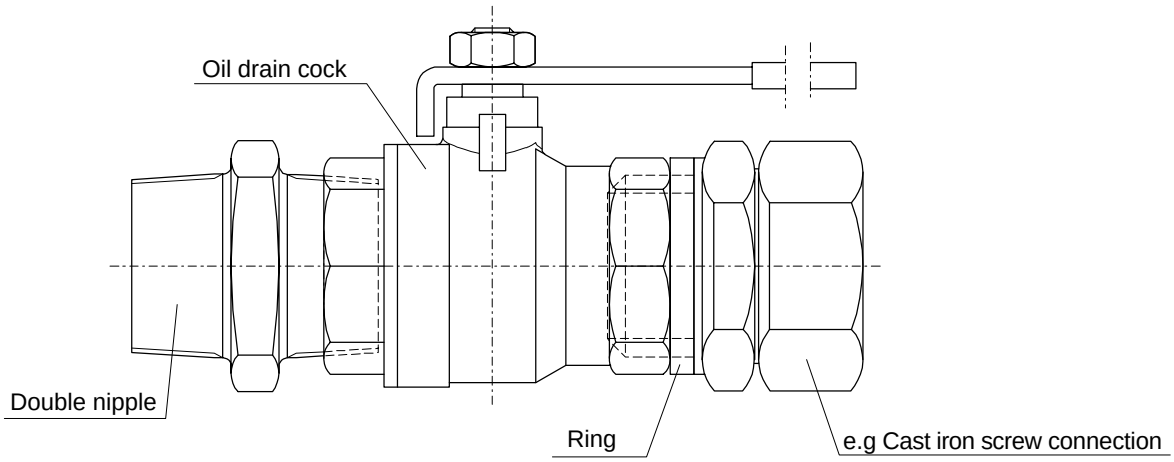

Fig. 3: Oil drain plug with double nipple, ring and cast iron screw connection

Diese technische Unterlage hat gesetzlichen Schutz (DIN 34)

Inductive sensor
with extended temperature range
Bi5-S18-AP7/S100

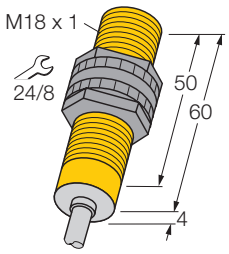

- **threaded barrel, M18 x 1**
- **plastic, PA12-GF30**
- **for temperatures up to 100°C**
- **3-wire DC, 10..0.30 VDC**
- **normally open pnp output**
- **cable connection**

Wiring diagram

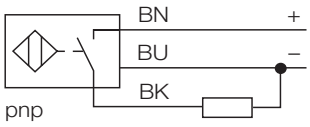

Type	Bi5-S18-AP7/S100
Ident-No.	17541
Rated operating distance Sn	5 mm
Mounting mode	flush
Hysteresis (switching distance)	3... 15 %
Min. repeat accuracy	≤ 2 %
Temperature drift	≤ ± 10 %
	≤ ± 20 %, ≥ +70 °C
Operating temperature	-25 ...+ 100 °C
Rated operational voltage (DC) U_B	10... 30 VDC
Max. ripple	≤ 10 % U_{pp}
Rated operational current (DC) I_e	≤ 200 mA
	see derating curve
No-load current I_0	≤ 10 mA
Max. OFF-state current	≤ 0,1 mA
Max. switching frequency	≤ 1 kHz
Rated insulation voltage	≤ 0,5 kV
Output function	3-wire, normally open, PNP
Short-circuit protection	no
Max. voltage drop at I_e	≤ 0,7 V
Wire breakage / reverse polarity protection	yes / yes (power supply)
Housing style	threaded barrel; M18 x 1
Dimensions	64 mm
Housing material	plastic, PA12-GF30
Active face	plastic, PA12-GF30
Max. fixing torque of coupling nut	2 Nm
Wiring	cable
Cable	Ø 5,2, LiYY-T105, PVC, 2 m
Cable cross section	3 x 0,5 mm^2
Vibration resistance	55 Hz (1 mm)
Shock resistance	30 x g (11 ms)
Degree of protection	IP67

Function principles

Inductive proximity switches are designed for wear-free non-contact detection of metal objects. For this they use a high-frequency electro-magnetic AC field that interacts with the target. With inductive sensors, this field is generated by an LC resonant circuit with a ferrite core coil. Special inductive sensors versions can be used at temperatures of -40°C up to +160°C.

Derating curve

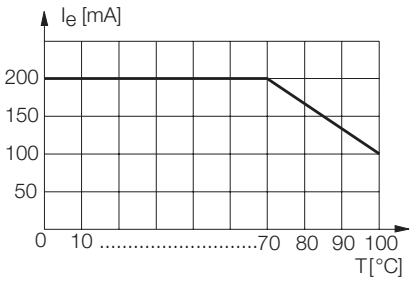

Subject to change without notice • © Hans Turck GmbH & Co.KG 2002 • Edition: • 19.02.2004

Hans Turck GmbH & Co.KG • Postfach • D-45466 Mülheim an der Ruhr • Telefon 02 08/49 52-0 • Telefax 02 08/49 52-264

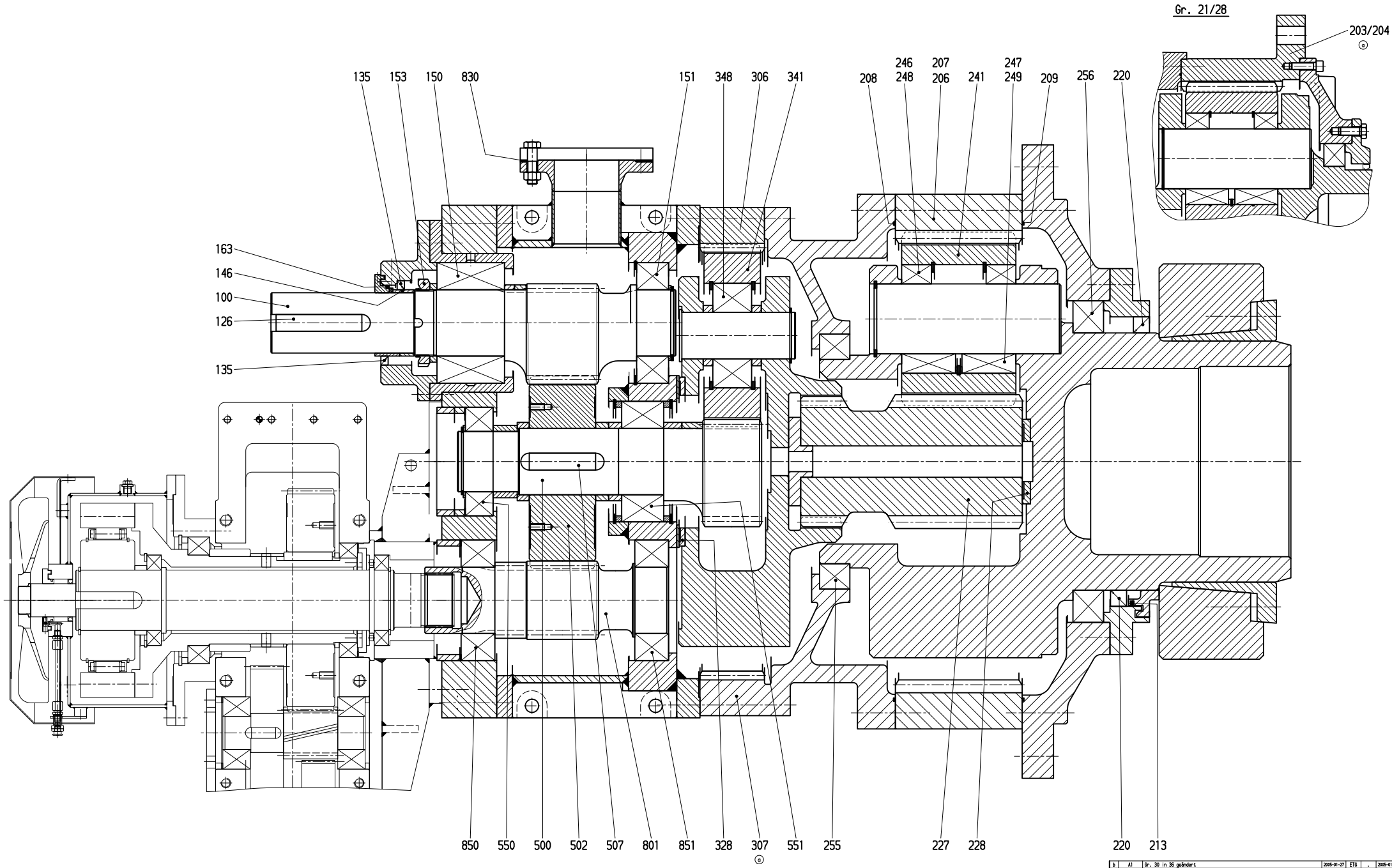

Teile nach Ersatzteilliste je nach Ausführung

Parts acc. to spare parts list depending on design

b	A1	Gr. 30 in 36 geändert	2005-01-27	ETG	2005-01-27
a	BB/MI	Teil-Nr. 307, 203, 204 hinzu	2002-09-10	STG	2002-09-12
Ä1	Feld	Änderungsbeschreibung	Datum	Name	Norm 2000-08-30

ZUL. Abweichungen für Maße ohne Tol.-Angaben mittel DIN 7168 — Auftr.-Nr. — gesichert

FLENDER

Nicht gekennzeichnete Oberflächen. — Rauhwerte Ra in µm

Gez.	EW3	2000-08-25	Linde
Gepr.	EW3	2000-08-28	Wahlbrock
Norm	NOR	2000-08-28	Luxer
Abt.		Datum	Name

Maßstab — Gewicht (kg) — Trägheitsmoment J (kgm²)

Werkstoff /-Nr.

Benennung: ERSATZTEIL-ZCHNG — Schl.-Nr.: 0110

P25A Gr. 21 - 36 / K.UF Gr. 5 - 8 Ⓑ

Rohteil nach Zeichnung — sonst nach Zeichnung

Format Art Zeichnungs-Nr. Ä1: 5 8 898 116 b

Ersatz für — Aus Zchng. 5 867 733

Basis-Nr. Modell-Nr. Ä1 Anz. Teil

Maße in mm — Schutzvermerk ISO 16016 beachten

PLOTT-DATUM: 05-MAY-2006 10:30:15 H. Raschle/HEVZ

/80/EL/KM/MV/CA

119/428

FLENDER	**Ersatzteilliste (EL)** Spare parts list	**Bauart** Type **P2DA** **Größe** Size **23,0** **Übersetzung** ratio **82,781**	**Seite** Page 1/2

Bei Korrespondenz bitte angeben
Please quote in correspondence **EL 4190294-080 DE/EN**

Hierzu gehört Zeichnungs-Nr.
Please refer to DWG No. **8898116**

	Teil-Nr. Part No.	Menge No. off		Benennung Description	Zeichnungs-Nr. Drawings No.	Material-Nr. Ident no.	Gw(kg) Weight
E	0100	1	ST	STRDWELLE RP 265,0/2,27 1.6587 PINION SHAFT RP 265,0/2,27 1.6587	5867954/-	000.001.254.583	80,0
E	0135	1	ST	WDR 130X160X15 BAUM W 5710 75FPM585 SHAFT SEAL 130X160X15 BAUM W 5710		000.000.781.850	0,2
E	0146	1	ST	RING 120,0X130,0X041,5W 34CrNiMo6 RING 120,0X130,0X041,5W 34CrNiMo6	5867054/E	000.000.626.178	0,6
E	0150	1	ST	EINBAUS 32226/DF ST-KAEF PAIRED TAPER ROLLER BEARINGS 32226/DF		000.000.379.980	24,4
E	0151	1	ST	WAELZL 2222 NU EC D 5412 SKF/FAG ROLLING CONTACT BEARING 2222 NU EC D 541		000.000.379.912	6,7
E	0163	3	ST	RING,AS 160/06,0X1,5 W 5730 FED-ST LAMELLAR RING, AS (FEY) 160/06,0X1,5 W 5		000.000.347.212	0,0
E	0206	1	ST	STIRNRAD,INVERZ P2 23 34CrNiMo6 INTERN.TOOTHED GEAR WHEEL P2 23	5867715/E	000.001.288.546	353,0
E	0208	3,00	M	SCHNUR-RD 04,0 72NBR872 ROUND CORD 04,0 72NBR872		000.000.307.199	0,1
E	0209	3,00	M	SCHNUR-RD 04,0 72NBR872 ROUND CORD 04,0 72NBR872		000.000.307.199	0,1
E	0213	3	ST	RING,AS 500/12,0X2,5 W 5730 FED-ST LAMELLAR RING, AS (FEY) 500/12,0X2,5 W 5		000.000.347.005	0,4
E	0220	1	ST	WDR 460X500X20 C D 3760 72NBR902 SHAFT SEAL 460X500X20 C D 3760 72NBR902		000.000.770.403	1,2
E	0227	1	ST	STIRD-PLA GP 272,4/1,76 1.6587 PLANET PINION GP 272,4/1,76 1.6587	5867004/K	000.001.254.585	88,5
E	0228	1	ST	RING-ANLAUF 065X160X10 PTFE/25C TIE PIECE 065X160X10 PTFE/25C	5867035/A	000.000.626.157	0,3
E	0241	3	ST	STIRD-PLA GP 272,4/1,76 1.6587	5867005/I	000.001.254.588	91,0
E	0249	6	ST	WAELZL185030 SL C3 2S ROLLING CONTACT BEARING185030 SL C3 2S		000.000.379.902	13,3
E	0255	1	ST	WAELZL181872 SL ROLLING CONTACT BEARING181872 SL		000.000.379.268	11,7
E	0256	1	ST	WAELZL181896 SL ROLLING CONTACT BEARING181896 SL		000.000.380.873	35,2
E	0306	1	ST	STIRNRAD,INVERZ PN 23 34CrNiMo6 INTERN.TOOTHED GEAR WHEEL PN 23	5867033/H	000.000.807.254	131,0
E	0328	1	ST	RING-ANLAUF 255X315X10 PTFE/25C TIE PIECE 255X315X10 PTFE/25C	5867048/B	000.000.626.164	0,4
E	0341	3	ST	STIRD-PLA GP 231,5/2,20 1.6587 PLANET PINION GP 231,5/2,20 1.658	5867024/A	000.001.260.263	32,8
E	0348	3	ST	WAELZL 22320 E/C3 D 635 SKF ROLLING CONTACT BEARING 22320 E/C3 D 635		000.000.380.341	13,0
E	0500	1	ST	STRDW-PLA GP 231,5/2,20 1.6587 PLANETARY CYLINDRICAL WHEEL SHAFT GP 231	5867963/B	000.001.260.265	53,0
E	0502	1	ST	STIRNRAD LP 265,0/2,27 1.6587 GEAR WHEEL LP 265,0/2,27 1.6587	5867955/A	000.001.254.634	88,8

Die mit * gekennzeichneten Teile gehören zu einer Baugruppe (G). Die Baugruppe ist nur komplett auszutauschen.
The parts marked with * belong to a subassembly (G). The subassemblymust be replaced complete.

FLENDER	Ersatzteilliste (EL) Spare parts list	Bauart / Type: P2DA Größe / Size: 23,0 Übersetzung / ratio: 82,781	Seite / Page 2/2

Bei Korrespondenz bitte angeben
Please quote in correspondence **EL 4190294-080 DE/EN**

Hierzu gehört Zeichnungs-Nr.
Please refer to DWG No. **8898116**

	Teil-Nr. Part No.	Menge No. off		Benennung Description	Zeichnungs-Nr. Drawings No.	Material-Nr. Ident no.	Gw(kg) Weight
E	0550	1	ST	WAELZL 2222 NU EC D 5412 SKF/FAG ROLLING CONTACT BEARING 2222 NU EC D 541		000.000.379.912	6,7
E	0551	1	ST	WAELZL 23224 CC/W33 D 635 MET-KAEF ROLLING CONTACT BEARING 23224 CC/W33 D 6		000.000.380.135	12,3
E	0801	1	ST	STRDWELLE RP 265,0/2,27 1.6587 PINION SHAFT RP 265,0/2,27 1.6587	6041985/A	000.001.254.827	48,2
E	0850	1	ST	WAELZL 32224 D 720 ST-KAEF ROLLING CONTACT BEARING 32224 D 720		000.000.380.754	9,0
E	0851	1	ST	WAELZL 32224 D 720 ST-KAEF ROLLING CONTACT BEARING 32224 D 720		000.000.380.754	9,0

A. Friedr.Flender AG, D 46393 Bocholt,
Tel.+ 49(0)2871/92-0, Fax+ 49(0)2871/922596, http://www.flender.com

Datum Date 05.05.2006 | HOBBOLD, HEINRICH | 2681 | Rev.:

FLENDER	**Ersatzteilliste (EL)** Spare parts list	**Bauart** Type **Größe** Size **Übersetzung** ratio	**Seite** Page 1/1

Bei Korrespondenz bitte angeben
Please quote in correspondence

EL 4190294-100 DE/EN

Hierzu gehört Zeichnungs-Nr.
Please refer to DWG No.

	Teil-Nr. Part No.	Menge No. off		Benennung Description	Zeichnungs-Nr. Drawings No.	Material-Nr. Ident no.	Gw(kg) Weight
E	0610	2	ST	LAGER-GEL GE120 UK-2RS BALL AND SOCKET JOINT GE120 UK-2RS		000.000.389.180	8,0
E	0611	4	ST	LAGER-GEL GE 90 UK-2RS BALL AND SOCKET JOINT GE 90 UK-2RS		000.000.389.178	2,7
E	0612	2	ST	DICHTUNG CD120 CELLASTO SEAL CD120 CELLASTO		000.000.625.296	0,1
E	0613	8	ST	DICHTUNG CD090 CELLASTO SEAL CD090 CELLASTO		000.000.625.269	0,1

Die mit * gekennzeichneten Teile gehören zu einer Baugruppe (G). Die Baugruppe ist nur komplett auszutauschen.
The parts marked with * belong to a subassembly (G). The subassemblymust be replaced complete.

A. Friedr.Flender AG, D 46393 Bocholt,
Tel.+ 49(0)2871/92-0, Fax+ 49(0)2871/922596, http://www.flender.com

Datum Date	HOBBOLD, HEINRICH	2681
05.05.2006	Rev.:	

FLENDER	Ersatzteilliste (EL) Spare parts list	Bauart / Type: P2DA Größe / Size: 23,0 Übersetzung / ratio: 82,781	Seite / Page: 1/2

Bei Korrespondenz bitte angeben
Please quote in correspondence **EL 4190294-120 DE/EN**

Hierzu gehört Zeichnungs-Nr.
Please refer to DWG No. **8898116**

	Teil-Nr. Part No.	Menge No. off		Benennung Description		Zeichnungs-Nr. Drawings No.	Material-Nr. Ident no.	Gw(kg) Weight
E	0100	1	ST	STRDWELLE RP 265,0/2,27 PINION SHAFT RP 265,0/2,27 1.6587	1.6587	5867954/-	000.001.254.583	80,0
E	0135	1	ST	WDR 130X160X15 BAUM SHAFT SEAL 130X160X15 BAUM W 5710	W 5710 75FPM585		000.000.781.850	0,2
E	0146	1	ST	RING 120,0X130,0X041,5W RING 120,0X130,0X041,5W 34CrNiMo6	34CrNiMo6	5867054/E	000.000.626.178	0,6
E	0150	1	ST	EINBAUS 32226/DF PAIRED TAPER ROLLER BEARINGS 32226/DF	ST-KAEF		000.000.379.980	24,4
E	0151	1	ST	WAELZL 2222 NU EC ROLLING CONTACT BEARING 2222 NU EC D 541	D 5412 SKF/FAG		000.000.379.912	6,7
E	0163	3	ST	RING,AS 160/06,0X1,5 LAMELLAR RING, AS (FEY) 160/06,0X1,5 W 5	W 5730 FED-ST		000.000.347.212	0,0
E	0206	1	ST	STIRNRAD,INVERZ P2 23 INTERN.TOOTHED GEAR WHEEL P2 23	34CrNiMo6	5867715/E	000.001.288.546	353,0
E	0208	3,00	M	SCHNUR-RD 04,0 72NBR872 ROUND CORD 04,0	72NBR872		000.000.307.199	0,1
E	0209	3,00	M	SCHNUR-RD 04,0 72NBR872 ROUND CORD 04,0	72NBR872		000.000.307.199	0,1
E	0213	3	ST	RING,AS 500/12,0X2,5 LAMELLAR RING, AS (FEY) 500/12,0X2,5 W 5	W 5730 FED-ST		000.000.347.005	0,4
E	0220	1	ST	WDR 460X500X20 C SHAFT SEAL 460X500X20 C D 3760 72NBR902	D 3760 72NBR902		000.000.770.403	1,2
E	0227	1	ST	STIRD-PLA GP 272,4/1,76 PLANET PINION GP 272,4/1,76 1.6587	1.6587	5867004/K	000.001.254.585	88,5
E	0228	1	ST	RING-ANLAUF 065X160X10 TIE PIECE 065X160X10 PTFE/25C	PTFE/25C	5867035/A	000.000.626.157	0,3
E	0241	3	ST	STIRD-PLA GP 272,4/1,76	1.6587	5867005/I	000.001.254.588	91,0
E	0249	6	ST	WAELZL185030 SL C3 2S ROLLING CONTACT BEARING185030 SL C3 2S			000.000.379.902	13,3
E	0255	1	ST	WAELZL181872 SL ROLLING CONTACT BEARING181872 SL			000.000.379.268	11,7
E	0256	1	ST	WAELZL181896 SL ROLLING CONTACT BEARING181896 SL			000.000.380.873	35,2
E	0306	1	ST	STIRNRAD,INVERZ PN 23 INTERN.TOOTHED GEAR WHEEL PN 23	34CrNiMo6	5867033/H	000.000.807.254	131,0
E	0328	1	ST	RING-ANLAUF 255X315X10 TIE PIECE 255X315X10 PTFE/25C	PTFE/25C	5867048/B	000.000.626.164	0,4
E	0341	3	ST	STIRD-PLA GP 231,5/2,20 PLANET PINION GP 231,5/2,20 1.658	1.6587	5867024/A	000.001.260.263	32,8
E	0348	3	ST	WAELZL 22320 E/C3 ROLLING CONTACT BEARING 22320 E/C3 D 635	D 635 SKF		000.000.380.341	13,0
E	0500	1	ST	STRDW-PLA GP 231,5/2,20 PLANETARY CYLINDRICAL WHEEL SHAFT GP 231	1.6587	5867963/B	000.001.260.265	53,0
E	0502	1	ST	STIRNRAD LP 265,0/2,27 GEAR WHEEL LP 265,0/2,27 1.6587	1.6587	5867955/A	000.001.254.634	88,8

Die mit * gekennzeichneten Teile gehören zu einer Baugruppe (G). Die Baugruppe ist nur komplett auszutauschen.
The parts marked with * belong to a subassembly (G). The subassemblymust be replaced complete.

A. Friedr.Flender AG, D 46393 Bocholt,
Tel.+ 49(0)2871/92-0, Fax+ 49(0)2871/922596, http://www.flender.com

Datum Date	HOBBOLD, HEINRICH	2681
05.05.2006	Rev.:	

FLENDER	Ersatzteilliste (EL) Spare parts list	Bauart / Type: P2DA Größe / Size: 23,0 Übersetzung / ratio: 82,781	Seite / Page 2/2

Bei Korrespondenz bitte angeben
Please quote in correspondence **EL 4190294-120 DE/EN**

Hierzu gehört Zeichnungs-Nr.
Please refer to DWG No. **8898116**

	Teil-Nr. Part No.	Menge No. off		Benennung Description	Zeichnungs-Nr. Drawings No.	Material-Nr. Ident no.	Gw(kg) Weight
E	0550	1	ST	WAELZL 2222 NU EC D 5412 SKF/FAG ROLLING CONTACT BEARING 2222 NU EC D 541		000.000.379.912	6,7
E	0551	1	ST	WAELZL 23224 CC/W33 D 635 MET-KAEF ROLLING CONTACT BEARING 23224 CC/W33 D 6		000.000.380.135	12,3
E	0801	1	ST	STRDWELLE RP 265,0/2,27 1.6587 PINION SHAFT RP 265,0/2,27 1.6587	6041985/A	000.001.254.827	48,2
E	0850	1	ST	WAELZL 32224 D 720 ST-KAEF ROLLING CONTACT BEARING 32224 D 720		000.000.380.754	9,0
E	0851	1	ST	WAELZL 32224 D 720 ST-KAEF ROLLING CONTACT BEARING 32224 D 720		000.000.380.754	9,0

A. Friedr.Flender AG, D 46393 Bocholt,
Tel.+ 49(0)2871/92-0, Fax+ 49(0)2871/922596, http://www.flender.com

Datum Date 05.05.2006 | HOBBOLD, HEINRICH | 2681 | Rev.:

FLENDER	**Ersatzteilliste (EL)** Spare parts list	**Bauart** Type **Größe** Size **Übersetzung** ratio	**Seite** Page 1/1

Bei Korrespondenz bitte angeben
Please quote in correspondence

EL 4190294-140 DE/EN

Hierzu gehört Zeichnungs-Nr.
Please refer to DWG No.

	Teil-Nr. Part No.	Menge No. off		Benennung Description	Zeichnungs-Nr. Drawings No.	Material-Nr. Ident no.	Gw(kg) Weight
E	0610	2	ST	LAGER-GEL GE120 UK-2RS BALL AND SOCKET JOINT GE120 UK-2RS		000.000.389.180	8,0
E	0611	4	ST	LAGER-GEL GE 90 UK-2RS BALL AND SOCKET JOINT GE 90 UK-2RS		000.000.389.178	2,7
E	0612	2	ST	DICHTUNG CD120 CELLASTO SEAL CD120 CELLASTO		000.000.625.296	0,1
E	0613	8	ST	DICHTUNG CD090 CELLASTO SEAL CD090 CELLASTO		000.000.625.269	0,1

Die mit * gekennzeichneten Teile gehören zu einer Baugruppe (G). Die Baugruppe ist nur komplett auszutauschen.
The parts marked with * belong to a subassembly (G). The subassemblymust be replaced complete.

A. Friedr.Flender AG, D 46393 Bocholt,
Tel.+ 49(0)2871/92-0, Fax+ 49(0)2871/922596, http://www.flender.com

Datum Date	HOBBOLD, HEINRICH	2681
05.05.2006	Rev.:	

Operating Instructions

BA 9702 EN 05.98

Oil supply systems type **OWGD**
Size 1 to 10

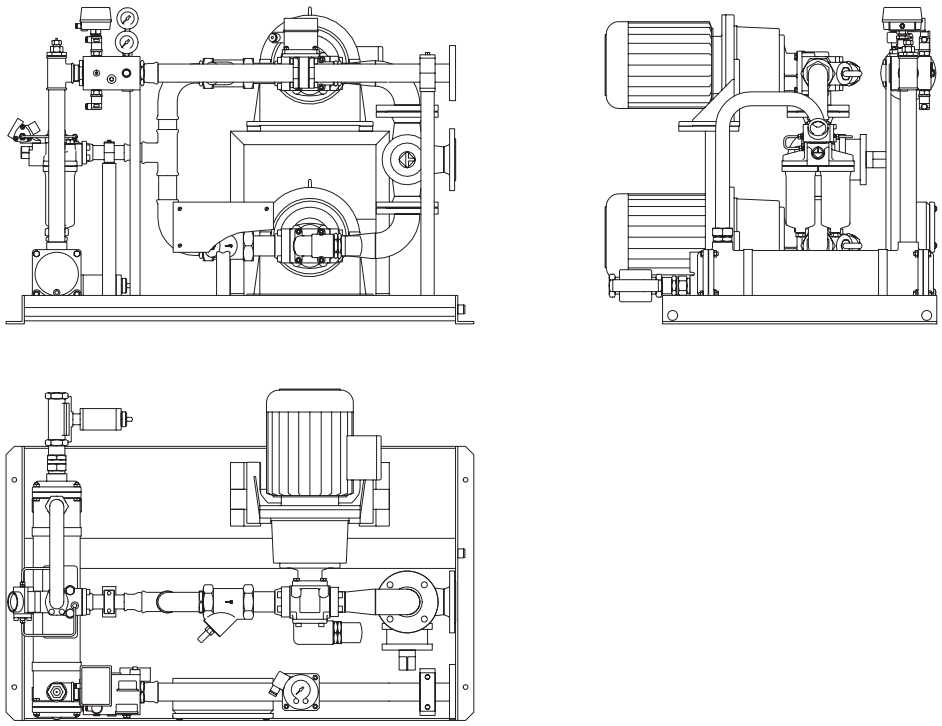

FLENDER

A. Friedr. Flender AG · 46393 Bocholt · Tel. 02871/92-0 · Telefax 02871/92-2596 · www.flender.com

Contents

1.	**Technical data**	**4**
1.1	General technical data	4
1.2	Flow quantities, dimensions, weights	4
1.3	Oil viscosity/oil grade	5
1.4	Model code	5
1.5	List of equipment	5
2.	**General notes**	**6**
2.1	General	6
3.	**Safety notes**	**6**
3.1	Safety notes	6
3.1.1	Notes and symbols in the operating instructions	7
4.	**Handling and storage**	**8**
4.1	Scope of supply	8
4.2	Handling and storage	8
4.2.1	Handling	8
4.3	Storage	9
5.	**Technical description**	**10**
5.1	General	10
6.	**Assembly**	**11**
6.1	General	11
6.2	Installation conditions	11
6.3	Installation	11
6.4	Final operations	11
7.	**Startup**	**12**
7.1	Filling with oil	12
7.2	Pump	12
7.3	Oil cooler	12
7.4	Startup	13
8.	**Operation**	**13**
8.1	Control notes	13
8.1.1	Three-way cock	14
8.1.2	Pumps	14
8.1.3	Filter	14
8.1.4	Pressure gauge	14
8.1.5	Pressure control	14
8.1.6	Thermometer	15
8.1.7	Temperature control	15
8.1.8	Flow control	15
8.1.9	Cooling water quantity regulator	15
8.1.10	General	15
8.2	Interlocking instructions	16
8.2.1	Pump enable	16
8.2.2	Gear unit enable	16
8.2.3	Warning	16
8.2.4	Gear unit stop	16
8.3	Response to malfunctions	17
8.4	Shutdown	17

9. Disturbances, reasons and remedy 18
9.1 General 18
9.2 Possible malfunctions 18

10. Maintenance and repair 19
10.1 Safety 19
10.2 Oils 19
10.3 Oil pump 19
10.4 Filter 19
10.5 Oil cooler 19
10.6 Preservation 19

11. Spare parts stock, service facility addresses 20
11.1 Spare parts stock 20
11.2 Service facility addresses 20

12. Declaration by the manufacturer 25

1. Technical data

1.1 General technical data

The nameplate of the oil supply system contains the most important technical data. These data and the contractual agreements for the oil supply system determine the limits of its proper use.

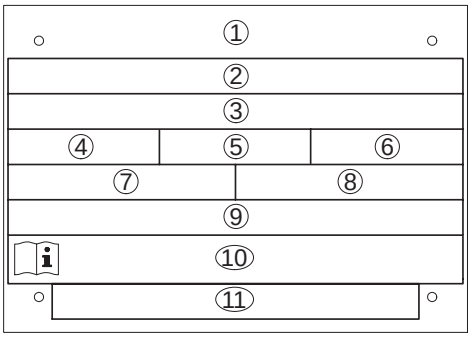

① Company logo and production location
② Special specifications
③ Order no. - position - serial no.
④ Type
⑤ Size
⑥ Model
⑦ $p_{Oil\ max}$ = max. permissible operating overpressure of oil
⑧ t_{min} = minimum starting temperature
⑨ Permissible operating pressure of water: $P_{Water\ max.}$ ... bar / ... PSI
⑩ No. of the Operating Instructions and no. of the list of equipment
⑪ Special specifications (e.g. total weight)

Note: These Operating Instructions generally comprise an order-specific list of equipment including drawings operating instructions of the accesory components (see Table 1.2).

Note: Terminal box and wiring only if ordered.

Further technical data will be found in table 1.1.

1.2 Flow quantities, dimensions, weights

Size	Pump flow quantities 50 Hz l/min	Pump flow quantities 60 Hz l/min	Dimensions l x b x h mm	Weight kg
1	7	5.6	920x720x600	115
2	12	9.6	920x720x600	115
3	20	16	920x720x600	125
4	30	24	920x720x600	130
5	52	42	1140x975x775	250
6	75	60	1140x975x775	270
7	112	90	1400x990x925	405
8	150	120	1420x1175x1000	515
9	200	160	1620x1175x950	550
10	270	215	2320x1180x1070	785

Table1.1: Flow quantities, dimensions, weights

Note: All given weights apply for model 4 without oil filling.

1.3 Oil viscosity/oil grade

The oil viscosity and oil grade will be found in the Operating Instructions or on the nameplate of the gear unit.

1.4 Model code

The equipment of the oil system in accordance with the ordered model will be found in the following table (see also item 1.1.)

List of equipment		**corresp. Operating Instructions**	**Part no.**	**Model**			
				1	2	3	4
Base frame		–	1	■	■	■	■
Three-way cock, suction line	size 1 - 4	BA KRO.HAH.000 EN	7	■	■	■	■
	size 5 - 10	BA HER.HAH.000 EN		■	■	■	■
2 Pump groups, pressure relief valve		BA STE.PUM.005 EN	10,13	■	■	■	■
3-phase A.C. motor		LOHER N-R 430 EN		■	■	■	■
Double change-over filter	size 1 - 4	FLENDER B 5922 EN	20	■	■	■	■
	size 5 - 10	FLENDER B 5921 EN		■	■	■	■
Water-oil cooler		BA SER.KUE.001 EN	30	■	■	■	■
2 Non return valves		FLENDER B 5916 EN	35	■	■	■	■
Pressure gauge		FLENDER B 5914 EN	45	■	■	■	■
Pressure control 0.5 bar		FLENDER B 5925 EN	50	■	■	■	■
Pressure control 0.8 bar			55	■	■	■	■
Thermometer		FLENDER B 5924 EN	60	■	■	■	■
Temperature control		FLENDER B 5926 EN	70		■	■	■
Flow control		FLENDER B 5927 EN	80			■	■
Cooling water quantity regulator		BA HRI.REG.000 EN	500		■		■
Terminal box and wiring if ordered							

Table 1.2: Model code

1.5 List of equipment

In a separate list of equipment, all parts are listed in accordance with the ordered model including their technical data.

2. General notes

2.1 General

These operating instructions are part of the oil supply system supply. They should always be kept near the oil supply system.

Only a precise knowledge of these Operating Instructions guaranteee trouble-free operation of the oil supply system. It is therefore in the interest of the operator for the Operating Instructions to be read, understood and observed in all respects by the persons responsible for handling, installation and operation.

Note: We accept no liability for any damage or malfunction resulting from non-observance of the Operating Instructions.

The ”**FLENDER oil supply system**” dealt with in these Operating Instructions has been developed for stationary use in general engineering. Possible applications for gear units of this series are for example sewage plants, excavators, the chemical industry, iron and steel manufacture, conveyor systems, crane systems, the foodstuffs industry, paper machines, cableways, the cement industry, etc.

The oil supply system is only designed for the field of application as specified in Section 1. ”Technical data”. Operating conditions which differ from that stated will require fresh contractual agreements.

The oil supply system described here is in accordance with the state of the art at the time of these Operating Instructions going to print.

In the interest of further development, we reserve the right to introduce modifications to the individual subassemblies and accessories which, while retaining the essential features, can be regarded as desirable to increase their efficiency and safety.

The copyright of these Operating Instructions remains the property of **FLENDER AG.**

These Operating Instructions may not be duplicated in part or whole, utilized for the purpose of publicity or communicated to third parties without our express consent.

Please contact our works listed below in respect of all technical queries:

FLENDER AG
D 46393 Bocholt

Telefon: 02871/92-0
Telefax: 02871/92-2728

or one of our service branches which are listed in Section 11. ”Stocking spare parts, service facility addresses”.

3. Safety notes

3.1 Safety notes

- The oil supply system is constructed in accordance with the state of the art and is reliable in the condition as shipped. Unauthorized modifications which impair its reliability are NOT permissible. This also applies to guards which are fitted as protection against accidental contact.
- The oil supply system may only be used and operated within the scope of the conditions specified in the contract of performance and supply.
- The operator should ensure that the persons entrusted with installation, operation, care and maintenance, and repair have read, understood the Operating Instructions and observe them in all respects in order that:

  – Prevent hazard to life and limb of the user and third parties

  – Ensure the reliability of the oil supply system

and

  – Prevent failure and environmental pollution due to incorrect handling.

- The relevant regulations concerning industrial safety and pollution control should be observed during handling, installation, operation, and care and maintenance.
- The oil supply system may only be operated, serviced and repaired by authorized, trained and properly instructed personnel.
- Cleaning with a high-pressure cleaning device is not permissible.
- All work should be carried out with care with the safety aspect in mind.
- All work on the oil supply system may only be carried out when it is stationary.
  The drive units must be secured to prevent accidental startup (e.g. by locking the key switch or by removing the fuses in the power supply). A notice should be displayed at the switch-on point stating that work is in progress on the oil supply system.
- On the occasion of oil changes, the old oil should be collected in a suitable receptacle. Any pools of oil which have occurred should be removed at once with an oil binding agent.
  Very dirty and oil-soaked cleaning rags should be kept in suitable containers.
  The oil, the oil binding agent and the cleaning rags should be disposed of in accordance with the relevant pollution control requirements.
- The drive unit should be shut off at once if changes in the oil supply system are detected during operation, such as for example increased operating temperature or a change in system noises.
- Pipe fittings, flange connections and monitoring devices may not be loosened while the system is pressurised. Beforehand, the pumps must be switched off and pressurised assemblies must be relieved.
- Rotating parts, such as couplings, gear wheels or belt drives must be protected by means of suitable guards to prevent accidental contact.
- When mounting the oil supply system to devices and systems, the device or system manufacturer is obliged to add the instructions, notes and description contained in these Operating Instructions to his operating instructions.
- Notes affixed to oil supply system, such as for example rating plate, direction of rotation arrows, etc., must be observed. They must be kept free from paint and dirt. Missing plates must be replaced.

3.1.1 Notes and symbols in the operating instructions

Instructions in the Operating Instructions which concern operating safety are emphasized as follows:

⚠ This symbol draws attention to safety measures which MUST be observed to prevent **personal injury.**

Caution! This symbol draws attention to safety measures which MUST be observed in any case to prevent **damages to the oil supply system and the gear unit.**

Note: This note draws attention to general **operating notes** which should be specially observed.

4. Handling and storage

4.1 Scope of supply

The contents of the shipment are listed in the shipping documents. They should be checked for completeness on receipt. Any shipping damage and/or missing parts should be reported in writing at once.

4.2 Handling and storage

4.2.1 Handling

The oil supply system is shipped in assembled state. Ancillary equipment (as e.g. compensators, hoses, pipes and fittings) are shipped packed separately.

The packing of the oil supply system will differ, dependent on method of shipment and size. The packing, unless otherwise agreed contractually, complies with **HPE Packing Guidelines**.

The symbols shown on the packing should be noted. Their significance is as follows:

bild-transport

This way up	Fragile	Keep dry	Keep cool	Centre of gravity	Use no hand hook	Attach here

Caution!

When handling the oil supply system, exercise special care to avoid damage due to the use of false or careless loading and unloading.
Ropes or chains should be used for handling the oil supply system. These may only be attached to the marked transporting eyes on the base frame.
It must be ensured that the lifting ropes do not damage the fittings and pipes. Therefore, a crosshead is required for protection. The rope length must be chosen in a way, that the base frame is suspended horizontally.

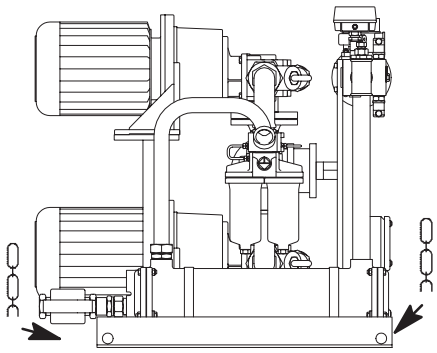

Detailed illustrations of the oil supply system will be found in the drawings in the oil supply system documentation.

4.3 Storage

When the shipping packing is removed, the oil supply system must be stored on site in a clean, dry area. The oil supply system is to be properly covered to prevent penetration of dust and moisture.

It must be ensured that temperature fluctuations in the place of storage do not lead to condensation forming in the oil supply system.

It is NOT permissible to stack oil supply systems on top of one another.

It must be ensured that no external damage can occur!

The openings must be closed with plugs or polyethylene flange covers.

The preservation is adequate for normal shipping conditions and a period of 24 months until startup takes place (storage in dry rooms).

If storage is to exceed 24 months, it is essential to consult FLENDER.

The external coating is resistant to weak acids and alkalis, oils and solvents. It is seawater-resistant, tropic-proof and heat resistant up to 140 °C / 284 °F.

5. Technical description

5.1 General

The oil supply system described below is used for oil cooling and/or lubrication of a gear unit (see Section 1. ”Technical Data”).

The oil supply system was submit to a comprehensive test run and was checked in accordance with the ordering data.

- The oil supply is ensured by means of two pump assemblies, one of which acts as a standby pump.
- The pump draws the oil via a suction line from the pump sump of the gear unit.
- A filter is provided in the oil circuit for filtration of the circulating oil.
- The quantity of heat generated by losses, which is not dissipatable by convection, is dissipated by means of a cooler.
- Filtered and recooled oil is then passed back to the gear unit via a pressure line.
- The modules described above are mounted on the base frame of the oil supply system.

Note: Control notes will be found in section 8. ”Operation”.

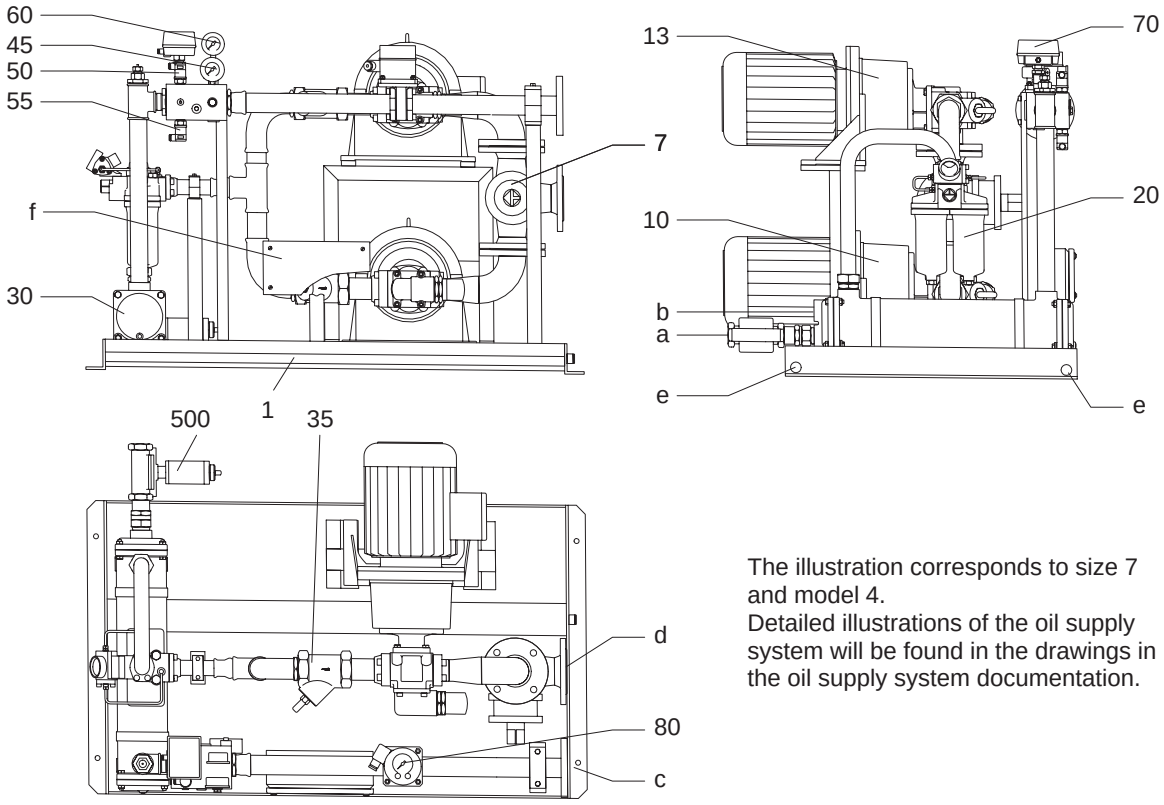

The illustration corresponds to size 7 and model 4.
Detailed illustrations of the oil supply system will be found in the drawings in the oil supply system documentation.

1	Base frame	60	Thermometer
7	Three-way cock	70	Temperature control
10	Pump group, pressure relief valve	80	Flow control
13	Pump group, pressure relief valve	500	Cooling water quantity regulator
20	Double change-over filter	a	Cooling water inlet
30	Water-oil cooler	b	Cooling water outlet
35	Non return valve	c	Pressure connection
45	Pressure gauge	d	Suction connection
50	Pressure control 0.5 bar	e	Transporting eyes
55	Pressure control 0.8 bar	f	Terminal box (only if ordered)

6. Assembly

6.1 General

We earnestly recommend having installation of the oil supply system carried out by FLENDER personnel. No liability is accepted for damage incurred as a result of improper execution by third parties.

6.2 Installation conditions

When planning space layout (e.g. planning carried out by customer), ensure that there is sufficient space around the oil supply system to permit unimpeded assembly and repair work. Machines installed upstream and downstream of the oil supply system should be located accordingly.

The load carrying capacity of hoists to be installed and used must at least be adequate for the data of the oil supply system; see Section 1. ”Technical Data”.

Installation of the oil supply system must be carried out on a level, firm and rigid foundation. Ensure that the oil can be drained off and that there is sufficient air supply for the motors. The valves and wearing parts must be readily accessible and permit easy inspection.

The permissible deviation of the installation surface of the oil supply system from the horizontal is 2 mm/1 m (0.08”/40”); if necessary, shims should be used.

6.3 Installation

For handling of the oil supply system, see Section 4. ”Handling and Storage”.

Packing and shipping protection devices should be removed before installation. Carry out a visual check for shipping damage and contamination. In the case of shipping damage, see Section 4. ”Handling and Storage”.

All preserved flange surfaces should be cleaned with a solvent, e.g. benzine.

Observe environment protection requirements.

If connecting pipes are not included in the scope of supply, pipes made from ST 35.4 in accordance with DIN 2391 (hydraulic pipe, quality grade C) should be used which are treated by normalizing bright annealing (NBK) and drawn finlessly.

The interfaces are provided with suitable flanges or screw unions.

Compensators should be used for vibration insulation and to compensate for linear expansion.

Customer supplied pipe fastenings (plastic clips) should be used for pipe connection. The distance between 2 clips must be less than 2 m / 78.7”.

Ensure that the pipes are not stressed.

After pipe installation, the lines should be flushed through. Welded pipes should be pickled.

Electrical connections of motors and monitors should be carried out in accordance with terminal drawings, equipment lists and specifications. Check voltage and circuits.

The plugs and flange covers should be removed and the fittings must be installed in the system in accordance with the lubrication diagram and the drawings (see Section 1. ”Technical Data”).

Parts supplied loose with threaded connection should be sealed with Loctite 128068 after thorough cleaning.

6.4 Final operations

After installing the oil supply system, all visible screw fastenings should be checked for tightness and tightened if necessary.

Fit all safety devices necessary !

7. Startup

7.1 Filling with oil

The following provisions are recommendations based on long years of experience. They are given however without any responsibility on the part of the gear unit manufacturer. Responsibility for the oil grade lies with the manufacturer of the oil and the operator of the system has to ensure satis factory state of the oil grade (see Operating Instructions ”Gear unit”).

In all cases, before startup, the gear unit/oil supply system should be filled with oil (see Operating Instructions ”Gear unit”). After filling, the filler openings should be properly reclosed and sealed.

Only oils in accordance with the specification should be used (see Operating Instructions ”Gear unit”). Mixing oils of different manufacturers is NOT permissible.

To remove residues of preservatives which can lead to oil foaming, the oil supply system together with the gear unit should be flushed before startup (see Operating Instructions ”Gear unit”).

The oil must then be drained carefully from the oil supply system, the monitors and the oil compartment in the gear unit while it is hot. It may only be reused as flushing oil. If the flushing oil is to be used in another system, it should first be carefully purified.

⚠ **There is a risk of scalding from the hot oil emerging.**
Wear protective gloves.

Caution! **Any oil leaking out must immediately be removed with an oil binding agent.**

Fresh oil in accordance with the specification should be used for startup (see Operating Instructions ”Gear unit”).

Fill the oil supply system with oil in accordance with the Operating Instructions ”Gear unit” via the gear unit resp. the oil container. Filling can be carried out with an auxiliary oil pump. Ensure that no dirt is allowed to enter the oil circuit.

Fill until the specified oil level is reached on the oil level gauge with the pump stationary (see Operating Instructions ”Gear unit”). The pump should then be started.

Before initial startup of the gear unit, the oil supply system must be run for at least 15 minutes to allow all oil compartments to fill up (see Operating Instructions ”Gear unit”). Stop the oil supply system again after wards and correct the oil level if necessary.

All pipes, screw unions and flanges should be tightened, this applying particularly to suction lines (to prevent air being drawn into the system). Leaks should be resealed.

7.2 Pump

Caution! **Low-pressure oil pumps are only permissible for one direction of rotation. The direction of rotation of motors must agree with the direction of rotation arrow on the pump.**

For the pump, the special operating instructions of the manufacturer must be observed.

7.3 Oil cooler

The water supply connections for the oil cooler should be established by the customer/operator.

If there is risk of frost and the oil supply system will be out of service for any considerable time, the cooling water should be drained off.

For the oil cooler, the special operating instructions of the manufacturer must be observed.

7.4 Startup

Before starting up the oil supply system, check that the requirements in accordance with these Operating Instructions and the requirements in accordance with the gear unit Operating Instructions have been fulfilled.

Caution!

Before startup, filling with oil must be carried out.
Before startup, check the cooling water circuit!
Stop valves are to be secured to prevent accidental closure.

Before startup and after repairs and maintenance work, the oil supply system is to be cleaned thoroughly to remove any impurities. This applies particularly to water (e.g. rain water and leakage of the cooler) in order to prevent mixture of water and oil.

All pumps, filters and coolers must be suitably bled.

⚠ **The works setting of the pressure relief valves/safety valves carried out by us at our works may NOT be altered, as it is not used to regulate the pressure and rate of flow. It is intended ONLY as overload protection!**

8. Operation

8.1 Control notes

The part numbers (...) given in the following text have been taken from the enclosed assembly drawing and the lubrication diagram.

Type, size and model of the oil supply system will be found on the nameplate of the oil system (see section 1.”Technical Data”).

List of equipment		corresp. Operating Instructions	Part no.	Model 1	2	3	4
Base frame		–	1	■	■	■	■
Three-way cock, suction line	size 1 - 4	BA KRO.HAH.000 EN	7	■	■	■	■
	size 5 - 10	BA HER.HAH.000 EN		■	■	■	■
2 Pump groups, pressure relief valve		BA STE.PUM.000 EN	10,13	■	■	■	■
3-phase A.C. motor		LOHER N-R 435 EN		■	■	■	■
Double change-over filter	size 1 - 4	FLENDER B 5922 EN	20	■	■	■	■
	size 5 - 10	FLENDER B 5921 EN		■	■	■	■
Water-oil cooler		BA SER.KUE.001 EN	30	■	■	■	■
2 Non return valves		FLENDER B 5916 EN	35	■	■	■	■
Pressure gauge		FLENDER B 5914 EN	45	■	■	■	■
Pressure control 0.5 bar		FLENDER B 5925 EN	50	■	■	■	■
Pressure control 0.8 bar			55	■	■	■	■
Thermometer		FLENDER B 5924 EN	60	■	■	■	■
Temperature control		FLENDER B 5926 EN	70		■	■	■
Flow control		FLENDER B 5927 EN	80			■	■
Cooling water quantity regulator		BA HRI.REG.000 EN	500		■		■
Terminal box and wiring if ordered							

Table 8.1: Model code

According to the model used, the oil system is instrumented in accordance with the model code:

Lubrication diagram

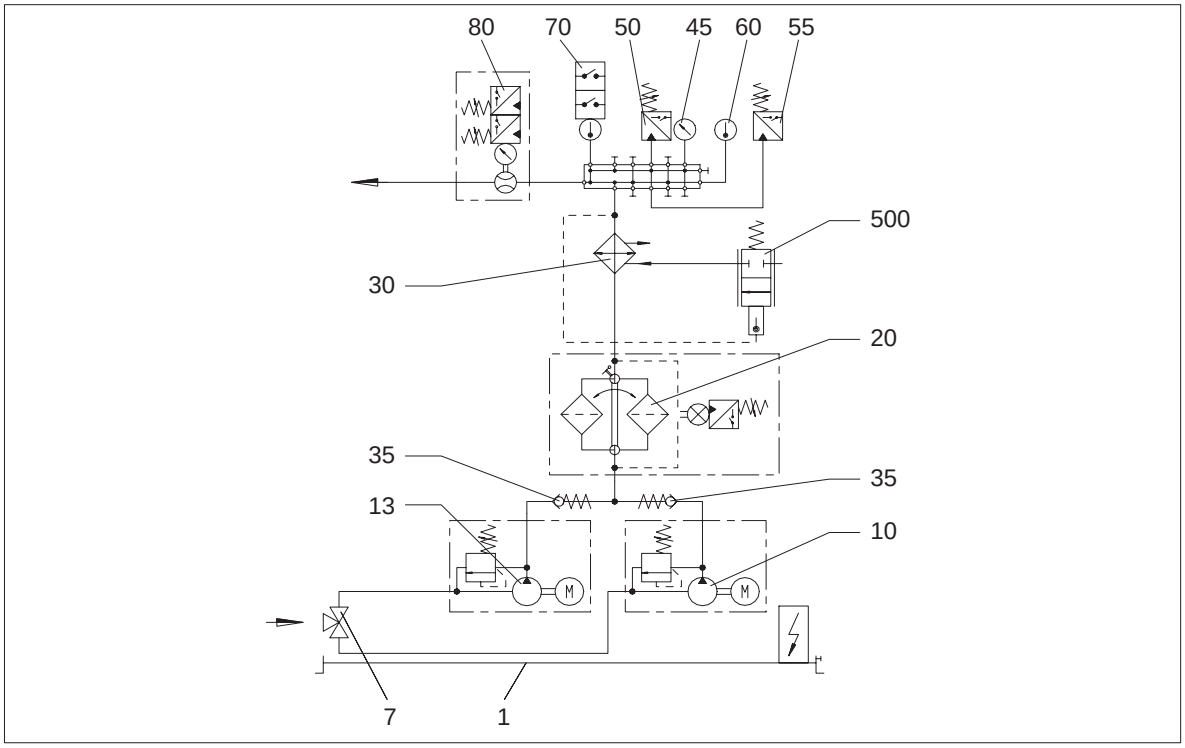

The following control notes must be considered for the individual components:

Note: In addition to these control notes, the specifications in the enclosed list of equipment must be observed in any case.

8.1.1 Three-way cock

On the suction side a three-way cock (7) has been arranged. When a pump is replaced this cock serves for closing the suction line to that pump, with the stand-by pump being in operation at the same time. During normal operation the cock has to be set so that the suction lines to both pumps are open.

8.1.2 Pumps

During operation of the pumps (10, 13), the system pressure is limited by means of a pressure relief valve, set to 8 bar, integrated in the pump.

Caution! **The factory adjustment of this valve may not be changed!**

8.1.3 Filter

Monitoring of the filter (20) is effected visually by means of a differential pressure indicator and electrically by means of a differential pressure control.

At Δ p > 2 bar ⇒ **WARNING** (Clean filter)

8.1.4 Pressure gauge

The oil pressure is indicated visually by means of a pressure gauge (45).

8.1.5 Pressure control

The pressure control of the oil supply system is effected by the means of the pressure controls (50, 55).

Oil pressure (50) p < 0.5 bar ⇒ **STOP**

Oil pressure (55) p < 0.8 bar ⇒ **WARNING** (STAND-BY PUMP ON)

8.1.6 Thermometer

The oil temperature is indicated visually by means of a thermometer (60).

8.1.7 Temperature control

Temperature monitoring of the system is effected by means of a temperature control (70).

At T > 75 °C ⇒ **WARNING**

At T > 80 °C ⇒ **STOP**

8.1.8 Flow control

The oil flow quantity is monitored by means of the flow control (80).

At oil flow rate < 80 % of pump delivery ⇒ **WARNING**

At oil flow rate < 70 % of pump delivery ⇒ **STOP**

8.1.9 Cooling water quantity regulator

The control of the water circuit is effected by means of a temperature controlled cooling water quantity regulator (500) the sensor of which is fixed by screws behind the cooler in the oil circuit.

8.1.10 General

The gear unit must be supplied alternately (interval 8 hrs) by pump 1 and pump 2.

The pump which is not in operation will in each case act as a stand-by pump.

For the pressure controls and the flow control delayed timing of 10 seconds should be provided.

After switching of the main drive, the oil supply system must run until the drive has come to a complete standstill.

8.2 Interlocking instructions

8.2.1 Pump enable

PUMP ENABLE takes place when the following conditions are fulfilled:

Oil temperature (70)	< 75 °C

8.2.2 Gear unit enable

GEAR UNIT ENABLE takes place when the following conditions are fulfilled:

Oil flow rate (80)	> 80 % of pump delivery
Oil pressure (55)	> 0.8 bar
Oil temperature (70)	< 75 °C
Filter differential pressure (20)	< 2 bar

Runup time of oil supply system at least 2 minutes (in the case of circulating oil lubrication).

8.2.3 Warning

WARNING takes place when one of the following conditions is fulfilled:

Oil flow rate (80)	< 80 % of pump delivery
Oil pressure (55)	< 0.8 bar
	⇒ STAND-BY PUMP ON
Oil temperature (70)	> 75 °C
Filter differential pressure (20)	> 2 bar after a period of 30 seconds

8.2.4 Gear unit stop

GEAR UNIT STOP takes place when one of the following conditions is fulfilled:

Oil flow rate (80)	< 70 % of pump delivery
Oil pressure (50)	< 0.5 bar
Oil temperature (70)	> 80 °C

If the oil temperature (70) is more than 80 °C during **GEAR UNIT STOP**, the pump must be left turned on until the oil temperature has decreased to a value < 75 °C.

8.3 Response to malfunctions

Irrespective of the following notes, the local safety requirements will apply in all cases for operation of the oil supply system.

Supervision during operation should on no account be dispensed with to recognize any malfunctions occurring (see Section 9. ”Disturbances, reasons and remedy”) and thus to implement preventive measures. The operating pressures and oil temperatures should be recorded on a regular basis.

If irregularities at variance from the normal state are noticed during operation, or if the operating data change, it is essential that the cause be located immediately. If necessary, shut the system off. If the causes cannot be located, even with the aid of the Troubleshooting List, inform FLENDER at once (see Section 11. ”Stocking spare parts, service facility addresses”).

We URGENTLY recommend to provide a lockable emergency switch to ensure that the system is secured to prevent accidental switch-on during maintenance, repairs, or malfunctions. In addition, we would draw attention to the relevant accident prevention rules on site!

For restart after malfunction, the notes in Section 7. ”Startup” should be noted.

8.4 Shutdown

For prolonged periods out of service on the part of gear unit and oil supply system, the following measures are necessary:

a) Gear unit and oil supply system should remain filled with oil. Every 4 weeks, gear unit and oil supply system must be run for 1 hour. The necessary prelubrication and lubrication times should be observed.

b) If the measures listed under a) are not possible, the gear unit and the oil supply system must be preserved.

Recommended conservation agent:

Preservation time up to 24 months: Castrol Alpha SP 220 S

In case of storage times of more than 24 months, the oil supply system must be preserved again.

Preservation time up to 36 months: Special anti-corrosion oil TRIBOL 1390 when using PG base synthetic oil.

If there is risk of frost and the oil supply system will be out of service for any considerable time, the cooling water should be drained off.

For periods out of service exceeding 36 months, it is ESSENTIAL to consult FLENDER (see also Operating Instructions ”Gear unit”).

9. Disturbances, reasons and remedy

9.1 General

Note: The malfunctions listed below are only intended as points of reference for troubleshooting. With such a complex system, all other modules must always be included in troubleshooting. If the cause of the malfunction is not clear, we recommend therefore that the specialist personnel of FLENDER be consulted in tracing possible causes.

9.2 Possible malfunctions

Malfunctions	Causes	Remedy
Oil temperature too high	No cooling water Too little cooling water Cooling water too hot	Rectify cooling water supply Increase cooling water supply
	Cooler contains air	Bleed cooler
	Cooler dirty	Pull bank of pipes and cooler and clean the bank of pipes or replace by a new bank of pipes. See seperate operating instructions.
Oil temperature too low	Gear unit not yet warmed up to operating temperature	Wait
	Too much cooling water Cooling water too cold	Reduce cooling water supply
Oil pressure too low	Filter clogged	Switch over to clean filter and clean or replace filter and filter element. See seperate operating instructions.
	Pressure relief valve wrongly set	Consult the FLENDER.
	Pressure relief valve defective	Repair or replace pressure relief valve. See seperate operating instructions.
	Suction line blocked	Clean suction line
	Pump aspirating air	Check suction line, remedy any leaks
	Oil temperature too high	as above
	Oil viscosity too low	Check the oil viscosity and fill in the correct oil, if necessary.
	Pump defective Pump drive defective	Switch over to standby pump, repair or replace defective pump. See seperate operating instructions.
Oil pressure too high	Gear unit not yet warmed up to operating temperature	Wait
	Pressure relief valve wrongly set	Consult the FLENDER.
	Pressure relief valve defective	Repair or replace pressure relief valve. See seperate operating instructions.
	Oil pipes to and at the gear unit blocked	Locate blocked pipe and clean
	Oil viscosity too high	Check the oil viscosity and fill in the correct oil, if necessary.

Malfunctions	Causes	Remedy
Clearly apparent or accumulated filter residues	Pipes dirty (scale, welding residues)	Clean pipes
	Abraded particels from gear unit	Check gear unit (bearings, tooth systems, alignment) and rectify defects
	Oil dirty	Carry out oil change
	Abraded particels from defective pump	Switch over to standby pump, repair or replace defective pump. See seperate operating instructions.
Oil consumption too high	Leak in pipes, connections, valves or gear unit	Tighten screws. Reseal
	Shaft outlets on gear unit leaking	Renew seal rings
	Cooler leaking	Seal cooler or renew cooler element. See seperate operating instructions.
	Filter leaking	Seal filter

Table 9.2: Information on malfunktions

10. Maintenance and repair

10.1 Safety

During maintenance and inspection, Section 3. ”Safety” and Section 8. ”Operation” should be observed.

10.2 Oils

The oil grades as well as the required all change intervals will be found in the Operating Instructions ”Gear Unit” section 10.

10.3 Oil pump

For the pumps, the special operating instructions of our subcontractor should be observed.

10.4 Filter

For filters, the special operating instructions of our subcontractor should be observed.

10.5 Oil cooler

For oil coolers, the special operating instructions of our subcontractor should be observed.

10.6 Preservation

See Section 8. ”Operation”.

11. Spare parts stock, service facility addresses

11.1 Spare parts stock

Maintaining a stock of the most essential replacement and wearing parts on site will ensure that the oil supply system is serviceable at all times.

When ordering spare parts, please use the list of equipment.

Further information will be found in the drawings listed in the list of equipment.

We assume warranty only for original spare parts supplied by us.

Caution! **We would expressly draw attention to the fact that spare parts and accessories not supplied by us have not been tested or approved by us either. Fitting and/or use of such products can therefore under certain circumstances adversely affect structurally specified properties of the oil supply system and will thus impair active and/or passive safety. No form of reliability or warranty will be assumed by FLENDER for damage occasioned by the use of non-original spare parts and accessories.**

Please note that production and supply specifications frequently exist for components and we will always offer spare parts in accordance with the state of the art and in accordance with the latest legal requirements.

When ordering spare parts, the following data should be stated:

Order No. Part No. Quantity

11.2 Service facility addresses

When ordering spare parts or requesting a service fitter, please contact FLENDER AG first of all.

FLENDER Germany

A. FRIEDR. FLENDER AG
46393 Bocholt - Tel.: (0 28 71) 92-0 - Fax: (0 28 71) 92 25 96
E-mail: contact@flender.com • www.flender.com
Shipping address: Alfred - Flender - Strasse 77 - 46395 Bocholt

A. FRIEDR. FLENDER AG - Kupplungswerk Mussum
Industriepark Bocholt - Schlavenhorst 100 - 46395 Bocholt - Tel.: (0 28 71) 92 28 68 - Fax: (0 28 71) 92 25 79
E-mail: couplings@flender.com • www.flender.com

A. FRIEDR. FLENDER AG - Werk Friedrichsfeld
Am Industriepark 2 - 46562 Voerde - Tel.: (0 28 71) 92-0 - Fax: (0 28 71) 92 25 96
E-mail: contact@flender.com • www.flender.com

A. FRIEDR. FLENDER AG - Getriebewerk Penig
Thierbacher Strasse 24 - 09322 Penig - Tel.: (03 73 81) 60 - Fax: (03 73 81) 8 02 86
E-mail: ute.tappert@flender.com • www.flender.com

FLENDER - TÜBINGEN GMBH
72007 Tübingen - Tel.: (0 70 71) 7 07-0 - Fax: (0 70 71) 70 74 00
E-mail: sales-motox@flender-motox.com • www.flender.com
Shipping address: Bahnhofstrasse 40 - 72072 Tübingen

LOHER GMBH
94095 Ruhstorf - Tel.: (0 85 31) 3 90 - Fax: (0 85 31) 3 94 37
E-mail: info@loher.de • www.loher.de
Shipping address: Hans-Loher-Strasse 32 - 94099 Ruhstorf

FLENDER SERVICE GMBH
44607 Herne - Tel.: (0 23 23) 940-0 - Fax: (0 23 23) 940 333
E-mail: infos@flender-service.com • www.flender-service.com
24h Service Hotline +49 (0) 17 22 81 01 00
Shipping address: Südstrasse 111 - 44625 Herne

A. FRIEDR. FLENDER AG - FLENDER GUSS
Obere Hauptstrasse 228-230 - 09228 Chemnitz / Wittgensdorf - Tel.: (0 37 22) 64-0 - Fax: (0 37 22) 64 21 89
E-mail: flender.guss@flender-guss.com • www.flender-guss.de

Germany

A. FRIEDR. FLENDER AG
46393 BOCHOLT - TEL.: (0 28 71) 92 - 0 - FAX: (0 28 71) 92 25 96
SHIPPING ADDRESS: ALFRED - FLENDER - STRASSE 77 - 46395 BOCHOLT

E-mail: contact@flender.com • www.flender.com

VERTRIEBSZENTRUM BOCHOLT
46393 Bocholt
Alfred-Flender-Strasse 77, 46395 Bocholt
Tel.: (0 28 71) 92 - 0
Fax: (0 28 71) 92 - 14 35
E-mail: vz.bocholt@flender.com

VERTRIEBSZENTRUM STUTTGART
70472 Stuttgart
Friolzheimer Strasse 3, 70499 Stuttgart
Tel.: (07 11) 7 80 54 - 51
Fax: (07 11) 7 80 54 - 50
E-mail: vz.stuttgart@flender.com

VERTRIEBSZENTRUM MÜNCHEN
85750 Karlsfeld
Liebigstrasse 14, 85757 Karlsfeld
Tel.: (0 81 31) 90 03 - 0
Fax: (0 81 31) 90 03 - 33
E-mail: vz.muenchen@flender.com

VERTRIEBSZENTRUM BERLIN
Schlossallee 8, 13156 Berlin
Tel.: (0 30) 91 42 50 58
Fax: (0 30) 47 48 79 30
E-mail: vz.berlin@flender.com

FLENDER International

(2003-12-01)

E U R O P E

AUSTRIA
Flender Ges.m.b.H.
Industriezentrum Nö-Süd
Strasse 4, Objekt 14, Postfach 132
2355 Wiener Neudorf
Phone: +43 (0) 22 36 6 45 70
Fax: +43 (0) 22 36 6 45 70 10
E-mail: office@flender.at
www.flender.at

BELGIUM & LUXEMBOURG
N.V. Flender Belge S.A.
Cyriel Buyssestraat 130
1800 Vilvoorde
Phone: +32 (0) 2 - 2 53 10 30
Fax: +32 (0) 2 - 2 53 09 66
E-mail: sales@flender.be

BULGARIA
A. Friedr. Flender AG
Branch Office
c/o Auto - Profi GmbH
Alabin Str. 52, 1000 Sofia
Phone: +359 (0) 2 - 9 80 66 06
Fax: +359 (0) 2 - 9 80 33 01
E-mail: sofia@auto-profi.com

CROATIA / SLOVENIA
BOSNIA-HERZEGOVINA
A. Friedr. Flender AG
Branch Office
c/o HUM - Naklada d.o.o.
Mandroviceva 3, 10000 Zagreb
Phone: +385 (0) 1 - 2 30 60 25
Fax: +385 (0) 1 - 2 30 60 24
E-mail: flender@hi.hinet.hr

CZECH REPUBLIC
A. Friedr. Flender AG
Branch Office
Hotel DUO, Teplicka 17
19000 Praha 9
Phone: +420 (0) 2 - 83 88 23 00
Fax: +420 (0) 2 - 83 88 22 05
E-mail: flender_pumprla@hotelduo.cz

DENMARK
Flender Scandinavia A/S
Rugmarken 35 B, 3520 Farum
Phone: +45 - 70 22 60 03
Fax: +45 - 44 99 16 62
E-mail: kontakt@flenderscandinavia.com
www.flenderscandinavia.com

ESTHONIA / LATVIA / LITHUANIA
Flender Branch Office
Addinol Mineralöl Marketing OÜ
Suur-Söjamäe 32
11415 Tallinn / Esthonia
Phone: +372 (0) 6 - 27 99 99
Fax: +372 (0) 6 - 27 99 90
E-mail: flender@addinol.ee
www.addinol.ee

FINLAND
Flender Oy
Ruosilantie 2 B, 00390 Helsinki
Phone: +358 (0) 9 - 4 77 84 10
Fax: +358 (0) 9 - 4 36 14 10
E-mail: webmaster@flender.fi
www.flender.fi

FRANCE
Flender s.a.r.l.
3, rue Jean Monnet - B.P. 5
78996 Elancourt Cedex
Phone: +33 (0) 1 - 30 66 39 00
Fax: +33 (0) 1 - 30 66 35 13
E-mail: sales@flender.fr

SALES OFFICES:
Flender s.a.r.l.
36, rue Jean Broquin
69006 Lyon
Phone: +33 (0) 4 - 72 83 95 20
Fax: +33 (0) 4 - 72 83 95 39
E-mail: sales@flender.fr

Flender - Graffenstaden SA
1, rue du Vieux Moulin
67400 Illkirch-Graffenstaden
B.P. 84
67402 Illkirch - Graffenstaden
Phone: +33 (0) 3 - 88 67 60 00
Fax: +33 (0) 3 - 88 67 06 17
E-mail: flencomm@flender-graff.com

GREECE
Flender Hellas Ltd.
2, Delfon str., 11146 Athens
Phone: +30 210 - 2 91 72 80
Fax: +30 210 - 2 91 71 02
E-mail: flender@otenet.gr

Mangrinox S.A.
14, Grevenon str., 11855 Athens
Phone: +30 210 - 3 42 32 01
Fax: +30 210 - 3 45 99 28
E-mail: mangrinox@otenet.gr

HUNGARY
A. Friedr. Flender AG
Branch Office
Bécsi Út 3-5, 1023 Budapest
Phone: +36 (0) 1 - 3 45 07 90 / 91
Fax: +36 (0) 1 - 3 45 07 92
E-mail: jambor.laszlo@axelero.hu

ITALY
Flender Cigala S.p.A.
Parco Tecnologico Manzoni
Palazzina G
Viale delle industrie, 17
20040 Caponago (MI)
Phone: +39 (0) 02 - 95 96 31
Fax: +39 (0) 02 -95 74 39 30
E-mail: info@flendercigala.it

THE NETHERLANDS
Flender Nederland B.V.
Industrieterrein Lansinghage
Platinastraat 133
2718 ST Zoetermeer
Postbus 725
2700 AS Zoetermeer
Phone: +31 (0) 79 - 3 61 54 70
Fax: +31 (0) 79 - 3 61 54 69
E-mail: sales@flender.nl
www.flender.nl

SALES OFFICES:
Flender Nederland B.V.
Lage Brink 5-7
7317 BD Apeldoorn
Postbus 1073
7301 BH Apeldoorn
Phone: +31 (0) 55 - 5 27 50 00
Fax: +31 (0) 55 - 5 21 80 11
E-mail: tom.alberts@flender-group.com

Bruinhof B.V.
Boterdiep 37
3077 AW Rotterdam
Postbus 9607
3007 AP Rotterdam
Phone: +31 (0) 10 - 4 97 08 08
Fax: +31 (0) 10 - 4 82 43 50
E-mail: info@bruinhof.nl
www.bruinhof.nl

NORWAY
Elektroprosess AS
Frysjaveien 40, 0884 Oslo
Postboks 165, Kjelsås
0411 Oslo
Phone: +47 (0) 2 - 2 02 10 30
Fax: +47 (0) 2 - 2 02 10 50 / 51
E-mail: post@elektroprosess.no

POLAND
A. Friedr. Flender AG
Branch Office
Przedstawicielstwo w Polsce
ul. Wyzwolenia 27
43 - 190 Mikolów
Phone: +48 (0) 32 - 2 26 45 61
Fax: +48 (0) 32 - 2 26 45 62
E-mail: flender@pro.onet.pl
www.flender.pl

PORTUGAL
Rodamientos FEYC, S.A
R. Jaime Lopes Dias, 1668 CV
1750 - 124 Lissabon
Phone: +351 (0) 21 - 7 54 24 10
Fax: +351 (0) 21 - 7 54 24 19
E-mail: info@rfportugal.com

ROMANIA
A. Friedr. Flender AG
Branch Office
98 - 106, Soseaua Mihai Bravu
Sector 2, Bloc D 16, Sc 1, Apartament 4
021331 Bucuresti - 2
Phone: +40 (0) 21 - 4 91 10 08
Fax: +40 (0) 21 - 4 91 10 08
E-mail: flender@fx.ro

RUSSIA
F & F GmbH
Tjuschina 4-6
191119 St. Petersburg
Phone: +7 (0) 8 12 - 3 20 90 34
Fax: +7 (0) 8 12 - 3 40 27 60
E-mail: flendergus@mail.spbnit.ru

SLOVAKIA
A. Friedr. Flender AG
Branch Office
Vajanského 49
P.O. Box 286, 08001 Presov
Phone: +421 (0) 51 - 7 70 32 67
Fax: +421 (0) 51 - 7 70 32 67
E-mail: micenko.flender@nextra.sk

SPAIN
Flender Ibérica S.A.
Poligono Industrial San Marcos
Calle Morse, 31 (Parcela D-15)
28906 Getafe - Madrid
Phone: +34 (0) 91 - 6 83 61 86
Fax: +34 (0) 91 - 6 83 46 50
E-mail: f-iberica@flender.es
www.flender.es

SWEDEN
Flender Scandinavia
Äsenvägen 2
44339 Lerum
Phone: +46 (0) 302 - 1 25 90
Fax: +46 (0) 302 - 1 25 56
E-mail: kontakt@flenderscandinavia.com
www.flenderscandinavia.com

SWITZERLAND
Flender AG
Zeughausstr. 48
5600 Lenzburg
Phone: +41 (0) 62 8 85 76 00
Fax: +41 (0) 62 8 85 76 76
E-mail: info@flender.ch
www.flender.ch

TURKEY
Flender Güc Aktarma Sistemleri
Sanayi ve Ticaret Ltd. Sti.
IMES Sanayi, Sitesi
E Blok 502. Sokak No. 22
81260 Dudullu - Istanbul
Phone: +90 (0) 2 16 - 4 66 51 41
Fax: +90 (0) 2 16 3 64 59 13
E-mail: cuzkan@flendertr.com
www.flendertr.com

UKRAINE
A. Friedr. Flender AG
Branch Office, c/o DIV - Deutsche Industrie-
vertretung, Prospect Pobedy 44
252057 Kiev
Phone: +380 (0) 44 - 4 46 80 49
Fax: +380 (0) 44 - 2 30 29 30
E-mail: flender@div.kiev.ua

UNITED KINGDOM & EIRE
Flender Power Transmission Ltd.
Thornbury Works, Leeds Road
Bradford
West Yorkshire BD3 7EB
Phone: +44 (0) 12 74 65 77 00
Fax: +44 (0) 12 74 66 98 36
E-mail: flenders@flender-power.co.uk
www.flender-power.co.uk

SERBIA-MONTENEGRO
ALBANIA / MACEDONIA
A. Friedr. Flender AG
Branch Office
c/o G.P.Inzenjering d.o.o.
III Bulevar 54 / 19
11070 Novi Beograd
Phone: +381 (0) 11 - 60 44 73
Fax: +381 (0) 11 - 3 11 67 91
E-mail: flender@eunet.yu

A F R I C A

NORTH AFRICAN COUNTRIES
Please refer to Flender s.a.r.l.
3, rue Jean Monnet - B.P. 5
78996 Elancourt Cedex
Phone: +33 (0) 1 - 30 66 39 00
Fax: +33 (0) 1 - 30 66 35 13
E-mail: sales@flender.fr

EGYPT
Sons of Farid Hassanen
81 Matbaa Ahlia Street
Boulac 11221, Cairo
Phone: +20 (0) 2 - 5 75 15 44
Fax: +20 (0) 2 - 5 75 17 02
E-mail: hussein@sonfarid.com

SOUTH AFRICA
Flender Power Transmission (Pty.) Ltd.
Cnr. Furnace St & Quality Rd.
P.O. Box 131, Isando 1600
Johannesburg
Phone: +27 (0) 11 - 5 71 20 00
Fax: +27 (0) 11 - 3 92 24 34
E-mail: sales@flender.co.za
www.flender.co.za

SALES OFFICES:
Flender Power Transmission (Pty.) Ltd.
Unit 3 Marconi Park
9 Marconi Crescent, Montague Gardens
P.O. Box 37291
Chempet 7442, Cape Town
Phone: +27 (0) 21 - 5 51 50 03
Fax: +27 (0) 21 - 5 52 38 24
E-mail: sales@flender.co.za

Flender Power Transmission (Pty.) Ltd.
Unit 3 Goshawk Park
Falcon Industrial Estate
P.O. Box 1608
New Germany 3620, Durban
Phone: +27 (0) 31 - 7 05 38 92
Fax: +27 (0) 31 - 7 05 38 72
E-mail: sales@flender.co.za

Flender Power Transmission (Pty.) Ltd.
9 Industrial Crescent, Ext. 25
P.O. Box 17609, Witbank 1035
Phone: +27 (0) 13 - 6 92 34 38
Fax: +27 (0) 13 - 6 92 34 52
E-mail: sales@flender.co.za

Flender Power Transmission (Pty.) Ltd.
Unit 14 King Fisher Park, Alton
Cnr. Ceramic Curve & Alumina Allee
P.O. Box 101995
Meerensee 3901, Richards Bay
Phone: +27 (0) 35 - 7 51 15 63
Fax: +27 (0) 35 - 7 51 15 64
E-mail: sales@flender.co.za

A M E R I C A

ARGENTINA
Chilicote S.A.
Avda. Julio A. Roca 546
C 1067 ABN Buenos Aires
Phone: +54 (0) 11 - 43 31 66 10
Fax: +54 (0) 11 - 43 31 42 78
E-mail: chilicote@chilicote.com.ar

BRASIL
Flender Brasil Ltda.
Rua Quatorze, 60 - Cidade Industrial
32211 - 970, Contagem - MG
Phone: +55 (0) 31 - 33 69 21 00
Fax: +55 (0) 31 - 33 69 21 66
E-mail: vendas@flenderbrasil.com

SALES OFFICES:
Flender Brasil Ltda.
Rua James Watt, 142
conj. 142 - Brooklin Novo
04576 - 050, São Paulo - SP
Phone: +55 (0) 11 - 55 05 99 33
Fax: +55 (0) 11 - 55 05 30 10
E-mail: flesao@uol.com.br

Flender Brasil Ltda.
Rua Campos Salles, 1095
sala 04 - Centro 14015 - 110,
Ribeirão Preto - SP
Phone: +55 (0) 16 - 6 35 15 90
Fax: +55 (0) 16 - 6 35 11 05
E-mail: flender.ribpreto@uol.com.br

CANADA
Flender Power Transmission Inc.
215 Shields Court, Units 4 - 6
Markham, Ontario L3R 8V2
Phone: +1 (0) 9 05 - 3 05 10 21
Fax: +1 (0) 9 05 - 3 05 10 23
E-mail: flender@ca.inter.net
www.flenderpti.com

SALES OFFICE:
Flender Power Transmission Inc.
34992 Bemina Court
Abbotsford - Vancouver
B.C. V3G 1C2
Phone: +1 (0) 6 04 - 8 59 66 75
Fax: +1 (0) 6 04 - 8 59 68 78
E-mail: tvickers@rapidnet.net

CHILE / ARGENTINA / BOLIVIA
ECUADOR / PARAGUAY / URUGUAY
Flender Cono Sur Limitada
Avda. Galvarino Gallardo 1534
Providencia, Santiago
Phone: +56 (0) 2 - 2 35 32 49
Fax: +56 (0) 2 - 2 64 20 25
E-mail: flender@flender.cl
www.flender.cl

COLOMBIA
A.G.P. Representaciones Ltda.
Flender Liaison Office Colombia
Av Boyaca No 23A
50 Bodega UA 7-1, Bogotá
Phone: +57 (0) 1 - 5 70 63 53
Fax: +57 (0) 1 - 5 70 73 35
E-mail: aguerrero@agp.com.co
www.agp.com.co

MEXICO
Flender de Mexico S.A. de C.V.
17, Pte, 713 Centro
72000 Puebla
Phone: +52 (0) 2 22 - 2 37 19 00
Fax: +52 (0) 2 22 - 2 37 11 33
E-mail: szugasti@flendermexico.com
www.flendermexico.com

SALES OFFICES:
Flender de Mexico S.A. de C.V.
Lago Nargis No. 38
Col. Granada,
11520 Mexico, D.F.
Phone: +52 (0) 55 - 52 54 30 37
Fax: +52 (0) 55 - 55 31 69 39
E-mail: info@flendermexico.com

Flender de Mexico S.A. de C.V.
Ave. San Pedro No. 231-5
Col. Miravalle
64660 Monterrey, N.L.
Phone: +52 (0) 81 - 83 63 82 82
Fax: +52 (0) 81 - 83 63 82 83
E-mail: info@flendermexico.com

PERU
Potencia Industrial E.I.R.L.
Calle Victor González Olaechea N° 110
Urb. La Aurora - Miraflores,
P.O.Box: Av. 2 de Mayo N° 679
Of.108-Miraflores
Casilla N° 392, Lima 18
Phone: +51 (0) 1 - 2 42 84 68
Fax: +51 (0) 1 - 2 42 08 62
E-mail: cesarzam@chavin.rcp.net.pe

USA
Flender Corporation
950 Tollgate Road
P.O. Box 1449, Elgin, IL. 60123
Phone: +1 (0) 8 47 - 9 31 19 90
Fax: +1 (0) 8 47 - 9 31 07 11
E-mail: flender@flenderusa.com
www.flenderusa.com

Flender Corporation
Service Centers West
4234 Foster Ave.
Bakersfield, CA. 93308
Phone: +1 (0) 6 61 - 3 25 44 78
Fax: +1 (0) 6 61 - 3 25 44 70
E-mail: flender1@lightspeed.net

VENEZUELA
F. H. Transmisiones S.A.
Urbanización Buena Vista
Calle Johan Schafer o Segunda Calle
Municipio Sucre, Petare
Caracas
Phone: +58 (0) 2 - 21 52 61
Fax: +58 (0) 2 - 21 18 38
E-mail: fhtransm@telcel.net.ve
www.fhtransmisiones.com

A S I A

BANGLADESH / SRI LANKA
Please refer to Flender Limited
No. 2 St. George's Gate Road
5th Floor, Hastings
Kolkata - 700 022
Phone: +91 (0) 33 - 2 23 05 45
Fax: +91 (0) 33 - 2 23 18 57
E-mail: flender@flenderindia.com

PEOPLE'S REPUBLIC OF CHINA
Flender Power Transmission
(Tianjin) Co. Ltd.
ShuangHu Rd.- Shuangchen Rd. West
Beichen Economic Development
Area (BEDA)
Tianjin 300400
Phone: +86 (0) 22 - 26 97 20 63
Fax: +86 (0) 22 - 26 97 20 61
E-mail: flender@flendertj.com
www.flendertj.com

Flender Power Transmission
(Tianjin) Co. Ltd.
Beijing Office
C-415, Lufthansa Center
50 Liangmaqiao Road, Chaoyang District
Beijing 100016
Phone: +86 (0) 10 - 64 62 21 51
Fax: +86 (0) 10 - 64 62 21 43
E-mail: beijing@flenderprc.com.cn

Flender Power Transmission
(Tianjin) Co. Ltd.
Shanghai Office
1101-1102 Harbour Ring Plaza
18 Xizang Zhong Rd.
Shanghai 200 001
Phone: +86 (0) 21 - 53 85 31 48
Fax: +86 (0) 21 - 53 85 31 46
E-mail: shanghai@flenderprc.com.cn

Flender Power Transmission
(Tianjin) Co. Ltd.
Wuhan Office
Rm. 1503, Jianyin Building,
709 Jianshedadao
Wuhan 430 015
Phone: +86 (0) 27 - 85 48 67 15
Fax: +86 (0) 27 - 85 48 68 36
E-mail: wuhan@flenderprc.com.cn

Flender Power Transmission
(Tianjin) Co. Ltd.
Guangzhou Office
Rm. 2802, Guangzhou International
Electronics Tower
403 Huanshi Rd. East
Guangzhou 510 095
Phone: +86 (0) 20 - 87 32 60 42
Fax: +86 (0) 20 - 87 32 60 45
E-mail: guangzhou@flenderprc.com.cn

Flender Power Transmission
(Tianjin) Co. Ltd.
Chengdu Office
G-6 / F Guoxin Mansion,
77 Xiyu Street
Chengdu 610 015
Phone: +86 (0) 28 - 86 19 83 72
Fax: +86 (0) 28 - 86 19 88 10
E-mail: chengdu@flenderprc.com.cn

Flender Power Transmission
(Tianjin) Co. Ltd.
Shenyang Office
Rm. 2-163, Tower I, City Plaza Shenyan
206 Nanjing Street (N), Heping District
Shenyang 110 001
Phone: +86 (0) 24 - 23 34 20 48
Fax: +86 (0) 24 - 23 34 20 46
E-mail: shenyang@flenderprc.com.cn

Flender Power Transmission
(Tianjin) Co. Ltd.
Xi'an Office
Rm. 302, Shaanzi Zhong Da
International Mansion
30 Southern Rd.
Xi'an 710 002
Phone: +86 (0) 29 - 7 20 32 68
Fax: +86 (0) 29 - 7 20 32 04
E-mail: xian@flenderprc.com.cn

INDIA
Flender Limited
Head Office:
No. 2 St. George's Gate Road
5th Floor, Hastings
Kolkata - 700 022
Phone: +91 (0) 33 - 22 23 05 45
Fax: +91 (0) 33 - 22 23 08 30
E-mail: flender@flenderindia.com

Flender Limited
Industrial Growth Centre
Rakhajungle, Nimpura
Kharagpur - 721 302
Phone: +91 (0) 3222 - 23 33 07
Fax: +91 (0) 3222 - 23 33 64
E-mail: works@flenderindia.com

SALES OFFICES:
Flender Limited
Eastern Regional Sales Office
No. 2 St. George's Gate Road
5th Floor, Hastings
Kolkata - 700 022
Phone: +91 (0) 33 - 22 23 05 45
Fax: +91 (0) 33 - 22 23 08 30
E-mail: ero@flenderindia.com

Flender Limited
Western Regional Sales Office
Plot No. 23, Sector 19 - C
Vashi, Navi Mumbai - 400 705
Phone: +91 (0) 22 - 27 65 72 27
Fax: +91 (0) 22 - 27 65 72 28
E-mail: wro@flenderindia.com

Flender Limited
Southern Regional Sales Office
41 Nelson Manickam Road
Aminjikarai,
Chennai - 600 029
Phone: +91 (0) 44 - 23 74 39 21
Fax: +91 (0) 44 - 23 74 39 19
E-mail: sro@flenderindia.com

Flender Limited
Northern Regional Sales Office
209-A, Masjid Moth, 2nd Floor
(Behind South Extension II)
New Delhi - 110 049
Phone: +91 (0) 11 - 26 25 02 21
Fax: +91 (0) 11 - 26 25 63 72
E-mail: nro@flenderindia.com

INDONESIA
Flender Singapore Pte. Ltd.
Representative Office
Perkantoran Puri Niaga II
Jalan Puri Kencana Blok J1
No. 2i, Kembangan
Jakarta Barat 11610
Phone: +62 (0) 21 - 5 82 86 24
Fax: +62 (0) 21 - 5 82 86 23
E-mail: bobwall@cbn.net.id

IRAN
Cimaghand Co. Ltd.
P.O. Box 15745-493
No. 13, 16th East Street
Beyhaghi Ave., Argentina Sq.
Tehran 15156
Phone: +98 (0) 21 - 8 73 02 14
Fax: +98 (0) 21 - 8 73 39 70
E-mail: info@cimaghand.com

ISRAEL
Greenshpon Engineering Works Ltd.
Haamelim Street 20
P.O. Box 10108, 26110 Haifa
Phone: +972 (0) 4 - 8 72 11 87
Fax: +972 (0) 4 - 8 72 62 31
E-mail: sales@greenshpon.com
www.greenshpon.com

JAPAN
Flender Japan Co., Ltd.
WBG Marive East 21F
Nakasa 2 - 6
Mihama-ku, Chiba-shi
Chiba 261-7121
Phone: +81 (0) 43 - 2 13 39 30
Fax: +81 (0) 43 - 2 13 39 55
E-mail: contact@flender-japan.com

KOREA
Flender Ltd.
7th Fl. Dorim Bldg.
1823 Bangbae-Dong, Seocho-Ku,
Seoul 137-060
Phone: +82 (0) 2 - 34 78 63 37
Fax: +82 (0) 2 - 34 78 63 45
E-mail: flender@unitel.co.kr

KUWAIT
South Gulf Company
Al-Reqai, Plot 1, Block 96
P.O. Box 26229, Safat 13123
Phone: +965 (0) - 4 88 39 15
Fax: +965 (0) - 4 88 39 14
E-mail: adelameen@hotmail.com

LEBANON
Gabriel Acar & Fils s.a.r.l.
Dahr-el-Jamal
Zone Industrielle, Sin-el-Fil
B.P. 80484, Beyrouth
Phone: +961 (0) 1 - 49 82 72
Fax: +961 (0) 1 - 49 49 71
E-mail: gacar@beirut.com

MALAYSIA
Flender Singapore Pte. Ltd.
Representative Office
37 A - 2, Jalan PJU 1/39
Dataran Prima
47301 Petaling Jaya
Selangor Darul Ehsan
Phone: +60 (0) 3 - 78 80 42 63
Fax: +60 (0) 3 - 78 80 42 73
E-mail: flender@tm.net.my

PAKISTAN
Please refer to
A. Friedr. Flender AG
46393 Bocholt
Phone: +49 (0) 28 71 - 92 22 59
Fax: +49 (0) 28 71 - 92 15 16
E-mail: ludger.wittag@flender.com

PHILIPPINES
Flender Singapore Pte. Ltd.
Representative Office
28/F, Unit 2814
The Enterprise Centre
6766 Ayala Avenue corner
Paeso de Roxas, Makati City
Phone: +63 (0) 2 - 8 49 39 93
Fax: +63 (0) 2 - 8 49 39 17
E-mail: roman@flender.com.ph

BAHRAIN / IRAQ / JORDAN / LYBIA
OMAN / QATAR / U.A.E. / YEMEN
Please refer to A. Friedr. Flender AG
Middle East Sales Office
IMES Sanayi Sitesi
E Blok 502, Sokak No. 22
81260 Dudullu - Istanbul
Phone: +90 (0) 2 16 - 4 99 66 23
Fax: +90 (0) 2 16 - 3 64 59 13
E-mail: meso@flendertr.com

SAUDI ARABIA
South Gulf Co.
Al-Khobar, Dahran Str.
Middle East Trade Center
3rd floor, Flat # 23
P.O. Box 20434 31952 Al-Khobar
Phone: +966 (0) 3 - 8 87 53 32
Fax: +966 (0) 3 - 8 87 53 31
E-mail: adelameen@hotmail.com

SINGAPORE
Flender Singapore Pte. Ltd.
13 A, Tech Park Crescent
Singapore 637843
Phone: +65 (0) - 68 97 94 66
Fax: +65 (0) - 68 97 94 11
E-mail: flender@singnet.com.sg
www.flender.com.sg

SYRIA
Misrabi Co & Trading
Mezzeh Autostrade Transportation
Building 4/A, 5th Floor
P.O. Box 12450, Damascus
Phone: +963 (0) 11 - 6 11 67 94
Fax: +963 (0) 11 - 6 11 09 08
E-mail: ismael.misrabi@gmx.net

TAIWAN
A. Friedr. Flender AG
Taiwan Branch Company
1F, No. 5, Lane 240
Nan Yang Street, Hsichih
Taipei Hsien 221
Phone: +886 (0) 2 - 26 93 24 41
Fax: +886 (0) 2 - 26 94 36 11
E-mail: flender_tw@flender.com.tw

THAILAND
Flender Singapore Pte. Ltd.
Representative Office
23/F M Thai Tower, All Seasons Place
87 Wireless Road, Phatumwan
Bangkok 10330
Phone: +66 (0) 2 - 6 27 91 09
Fax: +66 (0) 2 - 6 27 90 01
E-mail: christian.beckers@flender.th.com

VIETNAM
Flender Singapore Pte. Ltd.
Representative Office
Suite 6/6A, 16F Saigon Tower
29 Le Duan Street, District 1
Ho Chi Minh City, Vietnam
Phone: +84 (0) 8 - 8 23 62 97
Fax: +84 (0) 8 - 8 23 62 88
E-mail: flender@hcm.vnn.vn

A U S T R A L I A

Flender (Australia) Pty. Ltd.
9 Nello Place, P.O. Box 6047
Wetherill Park
N.S.W. 2164, Sydney
Phone: +61 (0) 2 - 97 56 23 22
Fax: +61 (0) 2 - 97 56 48 92, 97 56 14 92
E-mail: sales@flender.com.au
www.flender.com.au

SALES OFFICES:
Flender (Australia) Pty. Ltd.
Suite 3, 261 Centre Rd.
Bentleigh, VIC 3204 Melbourne
Phone: +61 (0) 3 - 95 57 08 11
Fax: +61 (0) 3 - 95 57 08 22
E-mail: sales@flender.com.au

Flender (Australia) Pty. Ltd.
Suite 5, 1407 Logan Rd.
Mt. Gravatt
QLD 4122, Brisbane
Phone: +61 (0) 7 - 34 22 23 89
Fax: +61 (0) 7 - 34 22 24 03
E-mail: sales@flender.com.au

Flender (Australia) Pty. Ltd.
Suite 2 403 Great Eastern Highway
W.A. 6104, Redcliffe - Perth
Phone: +61 (0) 8 - 94 77 41 66
Fax: +61 (0) 8 - 94 77 65 11
E-mail: sales@flender.com.au

NEW ZEALAND
Please refer to Flender (Australia) Pty. Ltd.
9 Nello Place, P.O. Box 6047
Wetherill Park
N.S.W. 2164, Sydney
Phone: +61 (0) 2 - 97 56 23 22
Fax: +61 (0) 2 - 97 56 48 92
E-mail: sales@flender.com.au

12. Declaration by the manufacturer

Declaration by the manufacturer

in accordance with EC Engineering Guideline 98/37/EC, Appendix II B

We hereby declare that the

Oil supply systems type **OWGD**
Size 1 to 10

described in these Operating Instructions are intended for incorporation in a machine, and that it is prohibited to put them into service before verifying that the machine into which they are incorporated complies with the EC Guidelines (original edition 98/37/EC including any subsequent amendments thereto).

This Manufacturer's Declaration takes into account all the unified standards (inasmuch as they apply to our products) published by the European Commission in the Official Journal of the European Community.

Bocholt, 1998-05-20

Signature (person responible for products)

Operating and Installation Instructions

Stop and control cocks with stuffing-box packing

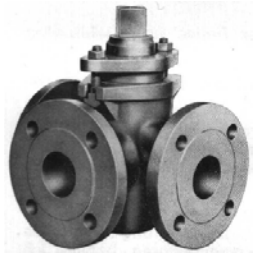

1.0	**Operating Instructions - General**	**2**	**5.0**	**Installation**	**5**
2.0	**Reference to dangers**	**2**	5.1	General installation instructions	5
2.1	Meaning of the symbols	2	5.2	Installation instructions for heatable cocks	5
2.2	Terms pertinent to safety	2			
2.3	Qualified staff	3			
3.0	**Handling**	**3**	**6.0**	**Dangers occurring during installation, operation and maintenance.**	**6**
3.1	Storing	3			
3.2	Transport	3	**7.0**	**Commissioning**	**6**
3.3	Handling prior to installation	3	**8.0**	**Maintenance**	**7**
4.0	**Description**	**3**	**9.0**	**Cause and remedial measures for failures**	**7**
4.1	Field of application	3	**10.0**	**Fault diagnosis chart**	**8**
4.2	Mode of operation	3	**11.0**	**Dismantling of the cock**	**9**
4.3	Graph	4	**12.0**	**Warranty**	**9**
4.4	Technical data – Notes	5	**13.0**	**Conformity / manufacturer's certificate**	**10**
4.5	Marking	5			

1.0 Operating Instructions - General

These operating instructions contain the instructions for a safe installation and operation of the cocks as provided. Should this involve difficulties that cannot be solved with the aid of these operating instructions, apply to the supplier / manufacturer for further information.
These operating instructions are in accordance with the relevant European Safety Standards and the rules and bodies of regulations valid in the Federal Republic of Germany.
When using the cocks outside the Federal Republic of Germany, the operating company or the company in charge of the design of the plant has to make sure that the valid national bodies of regulations are observed.
The manufacturer reserves the right to make alterations and improvements at any time. The use of these operating instructions requires the qualities of the user as described under item 2.3 "Qualified staff".
The operating staff has to be instructed in accordance with these operating instructions.

2.0 Reference to dangers

2.1 Meaning of the symbols

Warning of a general danger

2.2 Terms pertinent to safety

The signal terms DANGER, WARNING, CAUTION and NOTE are used in these operating instructions if there are indications of special dangers or for extraordinary information where special markings are required.

DANGER means that there is a mortal danger in case of non-observance and / or that considerable damage to property might occur.

WARNING means that there is a danger of injury in case of non-observance and / or that damage to property might occur.

CAUTION means that there is a danger of injury in case of non-observance and / or that damage to property might occur.

NOTE means that special attention is focussed on technical interrelations.

The observance of the other transport, installation, operating and maintenance instructions as well as technical data (in the operating instructions, the product documentation, and at the device itself) that are not especially set off, however, is equally imperative in order to avoid faults that might indirectly or directly cause personal injury or damage to property.

2.3 Qualified staff

These are people familiar with the erection, installation, commissioning, operation and maintenance of the product and who have the qualifications appropriate for their occupations and functions, such as instruction and obligation concerning the observance of all regional and internal regulations and requirements conditional on the application;
Training and instruction according to the standards of safety requirements concerning the maintenance and use of appropriate safety and protection equipment;
First-aid training, etc. (see also TRB 700)

3.0 Handling

3.1 Storing

- Storing temperature –20°C to +65°C, dry and free of dirt.
- The coat of varnish is a primer that is to give only corrosion protection for transport and storing purposes. Do not impair the paint.
- Moist rooms require desiccants or heatings to prevent condensate formation.

3.2 Transport

- Transport temperature –20°C to +65°C.
- Protect from external violence, shock and impact, vibrations.
- Do not impair coat of varnish.

3.3 Handling prior to installation

In case of the protecting cap type, remove protecting caps right before installation!
Protect from atmospheric influence, such as moisture (otherwise, use desiccants).
Treat with due care in order to protect from damage.

4.0 Description

4.1 Field of application

A+E cocks are used for "shutting off and regulating medium flows".
The field of application of the cock is subject to the responsibility of the plant planners.

- A+E cocks made of GG-25 are not released for an application as heat transfer medium in plants
- **Consultation is imperative in case of an application for mediums requiring or excluding certain materials.**
- Marking in accordance with the Pressure Equipment Directive, Section 3, sub-section 3.

4.2 Mode of operation (see 4.3 graph, figure 1)

By turning the plug (2) the cock is closed or "regulated". Sealing the cock is done by grinding in plug (2) and housing (1). The parts cannot be replaced. The stuffing-box packing (5) serves as spring assembly and provides the required application force of the plug in the housing. The application force is adjusted via the stuffing-box bolts (7).

4.3 Graph

Figure 1:

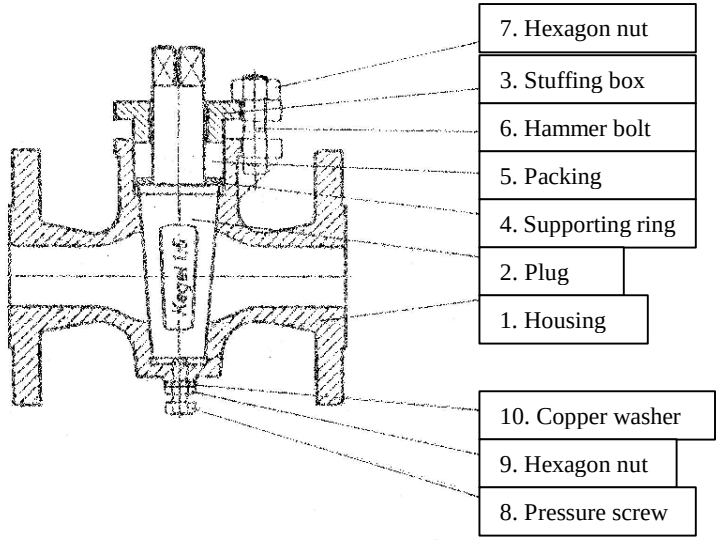

Figure 2: Packing ring

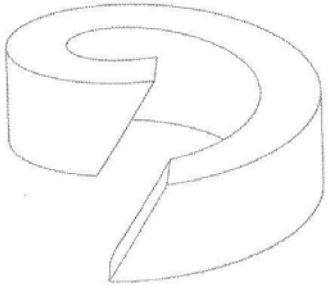

4.4 Technical data

- Main dimensions of the cocks
Data can be taken from the table of dimensions

4.5 Marking

Pressure stage	PN 10/16
Figure stamps	Year of manufacture / Check
Type / Model	Cock type / Model No
Manufacturer	

no CE – marking according to the Pressure Equipment Directive, Section 3, sub-section 3.

5.0 Installation

5.1 General installation instructions

Mind the below-mentioned items in addition to the general installation directives:

- Remove flange covers, if existing.
- The interior of cock and pipeline have to be free from foreign particles.
- Mind the installation position with regard to the flow.
- Referring to the plug direction, any installation position is possible, preferred plug position: vertical.
- Centre gaskets between the flanges.
- Connecting flanges have to correspond with each other.
- If steam is used as a medium, pipelines have to be laid with a gradient to prevent water pocket formation. Steam traps are required to avoid water hammers.
- Ensure stressfree installation.
- The cock is not allowed to serve as a locating point, it has to be carried by the piping system.
- Protect cocks from being polluted, in particular during construction works.
- Thermal expansions of the pipeline have to be balanced by expansion joints.

5.2 Installation data for heated cocks

- Type 71/86 HKF DN 65 – 80 - 100

After the plant has been commissioned and the operating temperature reached, the cocks have to be readjusted (see 4.3 Graph; Figure 1)

1. Loosen the pressure screw (8).
2. Tighten the stuffing-box nuts (7); after repeatedly turning the plug, the switching torque should be at around 120 Nm.
3. Turn then the pressure screw (8) towards the plug (2), with a good application force be felt. Pull then the check nut (9) with the copper washer (10) towards the bottom of the housing (1).

According to the switching rate of the cocks, steps 1, 2 and 3 should be repeated, in order that a switching torque of 120 Nm can be maintained (see 8.0 "Maintenance").

6.0 Dangers occurring during installation, operation and maintenance

DANGER !

Safe operation of the stuffing-box cock is ensured only if installed and commissioned with due care by qualified staff (see item 2.3 "Qualified Staff") in compliance with the warning instructions of these operating instructions. In addition, the observance of the general installation and safety instructions for the pipeline and plant construction and the professional use of tools and protecting equipment have to be guaranteed. It is imperative for all works at the cock or when handling the cock, to observe the operating instructions of the cock. The non-observance may result in injuries or damage to property.

If the cock is used as an end piece, a safety contrivance, such as a blank, a blind flange, etc. is required for repair works, according to the provisions of the employer's liability insurance association of the gasworks and waterworks.

7.0 Commissioning

- Prior to commissioning, check the data for material, pressure, temperature and flow direction by means of the piping diagram.
- Observe TRB 700
- Residues in the pipelines and cocks and fittings (dirt, welding beads, etc.) inevitably lead to leakage.

DANGER !

The following has to be ensured prior to any commissioning of a new plant or recommissioning of a plant after repair works or retrofitting:
- The proper completion of all installation works
- Commissioning by "Qualified staff" only (see item 2.3).
- The proper functional position of the cock
- Fixing or repairing of existing safety contrivances

8.0 Maintenance

Maintenance and maintenance intervals have to be determined by the operator according to the application conditions, see TRB700.

- Mind safety instructions
- In case of leakage at the plug, fasten stuffing-box packing gradually and steadily with hexagon nuts until tightness is reached.

WARNING ! In case of hot and harmful mediums refill or replace stuffing-box packing

- Refilling the stuffing box is permitted only when the medium is cooled down and the plant unpressurized.
  (For "Qualified staff" see item 2.3)
  In case of corrosive and / or aggressive mediums the stuffing-box cock, prior to being refilled, has to be drained and aerated.
- Regular checks for tightness increases the life of the stuffing-box cock.
- See to it that an angular cut is being made when cutting the stuffing-box packing to size.
  (see 4.3 graph, figure 2)

CAUTION ! Note that the stuffing-box packing is compatible to the medium.

WARNING ! Observe item 11.0 prior to dismounting the cock.

- Prior to the assembly of the cock, note that the gasketing areas must be cleaned and a fresh lubricant used.
  Lubricant: e.g. Gleitmo 100

CAUTION ! Always note that the lubricant is compatible with the medium.

- Put on stuffing box.
- Tighten crosswise and steadily the hexagon nuts of the hammer bolts.

9.0 Cause and remedial measure in case of failure

In case of malfunction or failure of the operational performance, check whether the installation and setting works were carried out and completed according to these operating instructions.
Observe TRB 700.

Compare the data for material, pressure, temperature and flow direction with the piping diagram
Moreover, check whether the operating conditions correspond to the technical data shown in the data sheet or on the cock.

DANGER !
For trouble shooting it is imperative to observe the safety instructions.

If the failure cannot be eliminated from below "**Fault Diagnosis Chart**", consult the supplier / manufacturer.

10.0 Fault diagnosis chart

Fault	Possible causes	Remedial measure
No flow	Cock closed Flange covers were not removed	Open cock Remove flange covers
Small flow	Cock not sufficiently opened Clogging in the piping system	Open cock Check piping system
Sluggish operation / cock cannot be opened	Gland too much fastened	Slight loosening of the gland hexagon nuts, however, tightness must remain ensured.
Not tight at the plug of the cock	Gland too loose	Fasten gland hexagon nuts, if required, refill packing of the packing gland. Observe installation position and idling of the cock, observe warning instructions. **Only for unpressurized system !**
Cock leaky at seat	Not tightly closed Foreign-object damage of bevel seat Polluted medium (solid particles)	Close cock Replace cock, inquire at manufacturer's /supplier's **Only for unpressurized system !** Clean cock, install strainer *upstream* of the cock. **Only for unpressurized system !**
Flange rupture (cock piping)	Bolts fastened one-sided angezogen Counter flanges are not in alignment.	Direct pipeline Mount new cock **Only for unpressurized system !**

Caution:
- Observe item 11.0 prior to installation and repair works !
- Observe item 7.0 prior to recommissioning !

11.0 Dismantling of the stuffing-box cock

In addition to the general installation directives and the TRB 700, observe the following items:
- unpressurized piping system
- cooled-down medium
- drained plant
- Aerate piping system in case of caustic, flammable, aggressive or toxic mediums.
- Have installation works done by qualified staff only (see item 2.3).

12.0 Warranty

Scope and period of warranty is shown in the version of the "General terms and conditions of the A+E Armaturen Erichlandwehr GmbH“ valid at the time of delivery, or differing from that, in the sales contract itself.

We warrant faultlessness corresponding to the respective state of the art and the confirmed application.

Warranty claims cannot be asserted for damage resulting from improper handling or from the non-observance of these operating and installation instructions, the regulations for prevention of accidents, the standards EN, DIN, VDE and other bodies of regulations.

Neither is subject to warranty damage caused during the operation under operating conditions that differ from the data sheet or other agreements.

Justified claims will be treated by us or special companies commissioned by us in order to eliminate the defects.

Claims that go beyond warranty are excluded. There is no right to replacement.

Maintenance works, installation of foreign parts, alteration of the construction, and natural wear are excluded from warranty.

Do not report possible damage to goods in transit to us, but *immediately* to your competent goods office, to the railway or to the forwarder, as any claims for damages to those companies will otherwise forfeit.

A+E Armaturen Erichlandwehr GmbH
Degenweg 2 in D-33659 Bielefeld
Phone (0521) 401225 Fax (0521) 403210
Internet: www.armaturen-erichlandwehr.de E-mail: info@armaturen-erichlandwehr.de

13.0 Conformity / Manufacturer's Certificate

Manufacturer's Certificate

Pressure Equipment Directive 97/23/EG

The products manufactured by us fall under the scope of section 3, sub-section 3 of the directive 97/23/EG (Pressure Equipment Directive).

The meet the requirements.

According to the marking, the stuffing-box cocks are allowed to be used up to a maximum permissible pressure of 16 bar (DN 15 to DN 100) and 10 bar (DN 125 and DN 150) for fluids of the fluid group 1.

Note:

The material compatibility must be proven, e.g. according to ADR or DIN 6601.

If the delivered type is installed in a machine of plant, the commissioning of the machine / plant is not allowed until it has been established that the machine / plant corresponds with the regulations of the EC-Directive Machinery, version 98/37/EG.

Bielefeld, February 2002

gez. A. Breulmann
.....
(Breulmann, Managing Director)

OPERATING MANUAL

Steimel Gear Pumps
and
Pump Units

Series B, R, SF, T

Type designation : .....

Serial No. : .....

Gebr. Steimel GmbH & Co
Maschinenfabrik

Postfach 1565
D-53762 Hennef

Telephone (02242) 88 09 - 0 Fax (02242) 88 09 160

1 General
1.1 Intended application
1.2 Product information
1.2.1 Type designation and works serial No.
1.2.2 Technical data sheet
1.2.3 Permitted use

2 Safety
2.1 Identification of safety instructions in the Operating Manual
2.2 Qualification and training of operating personnel
2.3 Hazards in the event of non-compliance with the safety instructions
2.4 Compliance with regulations pertaining to safety at work
2.5 Safety instructions relevant for operation
2.6 Safety instructions relevant for maintenance, inspection and assembly work
2.7 Unauthorised alterations and production of spare parts
2.8 Unauthorised modes of operation

3 Transport and intermediate storage
3.1 Transport
3.2 Intermediate storage

4 Technical description
4.1 General description
4.2 Construction and mode of operation
4.3 Mechanical construction
4.3.1 Pump casing
4.3.2 Gear wheels
4.3.3 Shafts, bearings and lubrication
4.3.4 Shaft seal
4.3.5 Drive
4.4 Accessories
4.4.1 Pressure relief valve
4.4.2 Heating and cooling units

5 Mounting / installation
5.1 Installation position
5.2 Mounting for the first time
5.3 Drive elements
5.3.1 Aligning flexible couplings
5.3.2 Coupling guard
5.4 Electrical connection
5.5 Pipes
5.5.1 Purging
5.5.2 Connecting pipes
5.5.3 Additional connections
5.5.4 Suction line
5.5.5 Delivery line
5.5.6 Pressure test and leakage test
5.6 Protection against foreign bodies and contamination

6 Starting up / shutting down
6.1 Preparations for starting up
6.2 Initial commissioning
6.3 Placing back into operation
6.4 Shutting down

7 Maintenance / repair
7.1 General information
7.2 Shaft seal
7.2.1 Stuffing box packing
7.2.2 Axial face seal / rotary shaft seal
7.2.3 Twin seals
7.2.4 Pressure relief valve
7.3 Dismantling and re-assembly
7.3.1 Basic instructions
7.3.2 Dismantling the unit
7.3.3 Dismantling the pump
7.3.4 Assembling the pump / unit
7.4 Spare parts

8 Related drawings

9 Faults; causes and remedies

1 General

1.1 Intended application

Steimel gear pumps are suitable for pumping lube oils, fuel oils and other lubricating fluids.
The fluids pumped may not contain any abrasive components and may not chemically attack the materials of which the pump is made.
The field of application of these pumps extends from oil hydraulics through lubrication systems to pure pumping applications.
Above all, the pumped medium must always be clean and have good lubricating properties in order to ensure that the pump operates correctly, in order to ensure a high level of operating reliability and safety and in order to ensure a long service life.

1.2 Product information

1.2.1 Type designation and works serial No.

The full type designation is specified in the technical data sheet or the order confirmation.
The works serial No. comprises the contract No. and a consecutive serial No. (e.g. 94 1234-2). It is imprinted directly on the rating plate or on the pump.

1.2.2 Technical data sheet

The technical data sheet is a part of our sales order confirmation and should contain all important technical details agreed between the purchaser and manufacturer, such as

- designation, type, size
- item No.
- project drawing / dimension sheet
- spare parts list for parts subject to wear
- related Operating Manuals
- suction and delivery connection
- materials
- shaft seal
- pumped medium / field of application
- direction of rotation
- accessories
- hydraulic parameters such as delivery rate, operating pressure, speed, viscosity range and temperature range

If required, also:

- pressure relief valve / safety facilities
- special installation position
- suction characteristics
- operating or working range / scheduled or permitted use
- sound pressure level
- power requirement
- internal preservation
- surface protection / paint finish
- weight
- references to tests, certificates and acceptance tests
- date of issue

in the case of pump units, also:

- drive type / motor / transmission
- motor and transmission data
- coupling / belt drive
- sub-plate, intermediate bracket / pump mount
- accessories / safety facilities
- references to required certificates
- miscellaneous.

1.2.3 Permitted use

The pump / pump unit is designed only for the field of application listed in the technical data sheet of our order confirmation.
Differing operating conditions will necessitate new contractual agreements.

2 Safety

This Operating Manual gives basic instructions which are to be observed during installation, operation and maintenance of the pump. It is therefore imperative that this Manual be read by the responsible personnel / operator prior to assembly and commissioning. It is always to be kept available at the installation site.

It is not only the general safety instructions contained under this main heading "Safety" that are to be observed but also the specific information provided under the other main headings.

2.1 Identification of safety instructions in the Operating Manual

Safety instructions given in this Manual, non-compliance with which would affect safety are identified by the following symbol:

See DIN 4844-W 9

or where electrical safety is involved, with

see DIN 4844-W 8.

The word CAUTION

indicates safety information which may result in risks to the machine and its function if the information is not observed.

It is imperative that signs affixed to the machine, e.g.

- arrow indicating the direction of rotation

- symbols indicating fluid connections

be observed and kept legible.

2.2 Qualification and training of operating personnel

The personnel responsible for operation, maintenance, inspection and assembly must be adequately qualified. Scope of responsibility and supervision of the personnel must be exactly defined by the plant operator. If the staff do not have the necessary knowledge, they must be trained and instructed, which may be performed by the machine manufacturer or supplier on behalf of the plant operator. Moreover, the plant operator is to make sure that the contents of the Operating Manual are fully understood by the personnel.

2.3 Hazards in the event of non-compliance with the safety instructions

Non-compliance with the safety instructions may produce a risk to the personnel as well as to the environment and the machine and results in a loss of any right to claim damages.

For example, non-compliance may involve the following hazards:

- Failure of important functions of the machine/plant

- Failure of specified procedures of maintenance and repair

- Exposure of people to electrical, mechanical and chemical hazards

- Endangering the environment owing to hazardous substances being released.

2.4 Compliance with regulations pertaining to safety at work

When operating the pump, the safety instructions contained in this Manual, the relevant national accident prevention regulations and any other service and safety instructions issued by the plant operator are to be observed.

2.5 Safety instructions relevant for the plant operator

- If hot or cold machine components involve hazards, they must be guarded against accidental contact on site.

- Guards for moving parts (e.g. coupling) must not be removed from the machine while in operation.

- Any leakage of hazardous (e.g. explosive, toxic, hot) fluids (e.g. from the shaft seal) must be drained away so as to prevent any risk to persons or the environment. Statutory regulations are to be complied with.

- Hazards resulting from electricity are to be prevented (see for example, the VDE Specifications and the bye-laws of the local power supply utilities).

2.6 Safety instructions relevant for maintenance, inspection and assembly work

It shall be the plant operator's responsibility to ensure that all maintenance, inspection and assembly work is performed by authorised and qualified personnel who have adequately familiarised themselves with the subject matter by studying this Manual in detail.

Any work on the machine shall only be performed when it is at a standstill, it being imperative that the procedure for shutting down of the machine described in this Manual be followed.
Pumps and pump units which convey hazardous media must be decontaminated.

On completion of work all safety and protective facilities must be re-installed and made operative again.

Prior to restarting the machine, the instructions listed under "Initial commissioning" are to be observed.

2.7 Unauthorised alterations and production of spare parts

Any modification may be made to the machine only after consultation with the manufacturer. Using spare parts and accessories authorised by the manufacturer is in the interest of safety. Use of other parts may exempt the manufacturer from any liability.

2.8 Unauthorised modes of operation

The reliability of the machine delivered will be only guaranteed if it is used in the manner intended, in accordance with Clause 1 of this Manual. The limit values specified in the data sheet must under no circumstances be exceeded.

3 Transport and intermediate storage

3.1 Transport

The pump / the pump unit is delivered in assembled condition. Lube oils for transmissions, confining and sealing fluid and valves / fittings are delivered in separate packagings if necessary.

The pump / the pump unit is packaged differently, depending on the transport route and size. The packaging complies with our general packaging guidelines unless otherwise contractually agreed. When transporting the complete unit, the cables must be attached, as shown, to pump and motor (not to the eyebolt of the motor and pump).

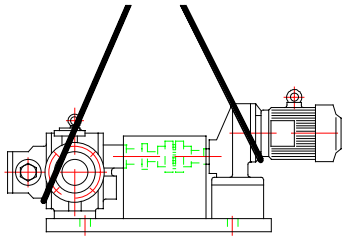

The motor suspension eyebolts are suitable only f or the weight of the motor. Likewise, the pump eyebolt is suitable only for the weight of the pump. Consequently, additional loads attached to the motor and pump may not be raised with these eyebolts.

Please avoid jerky movements, shock and heavy vibration when raising and lowering during transportation !

3.2 Intermediate storage

The pump / the pump unit must be stored on a timber support at a protective location in the position of normal use and must be covered.

It is not permitted to stack heavy pumps / pump units one above the other.

The pump is not provided with internal preservation. In some cases, a film of test medium originating from the test bench run may still adhere to the inside faces. A mineral oil is used as the test medium unless otherwise agreed.
Should you intend to store the unit for long periods, we advise you to contractually agree on a special internal preservation.
The condition of the pump and its preservation must be checked at least once per year!
If stored in the open air, please carefully cover the pump / pump unit and ensure that it is not exposed either to moisture or foreign bodies.

4 Technical description

4.1 General description

The gear pump, being the most popular type of rotary, positive-displacement pump, owes its great popularity primarily to the sophisticated involute gearing which permits low-cost series production with high precision, besides its simple construction. Most gear pumps have straight-toothed spur gears. Certain types are fitted with helical-tooth spur gears or with double-helical (herring-bone) gears in an effort to achieve greater running smoothness.

4.2 Construction and mode of operation

In line with the diverse fields of application of the gear pumps, we have developed a variety of different models.
Very low-pressure gear pumps for pumping moderately fluid to viscous media generally have a large displacement volume and low speed of rotation. It is more economical to pump low-viscosity media with small, high-speed gear pumps.
The mode of operation of the external gear pump results from the engaged teeth. This is where the actual separation process between suction and pressure chamber occurs.
The drive gear wheel / drive pinion drives the mating gear wheel / mating pinion, thus causing the intermeshing teeth to release the tooth spaces abruptly.

When the gear wheels, which are surrounded by a casing or adapter on all sides, rotate, the tooth spaces fill with the medium to be pumped as the result of the partial vacuum produced and convey it outwards and around to the delivery end. Combing of the gear wheels which are turning in opposite directions forces the medium into the delivery line.
The delivery pressure produced by a pump builds up in the delivery line depending on the resistances opposing the delivery flow. These resistances result from pipe friction and the various installed fittings, fixtures and devices.
The power demand increases with increasing delivery pressure!

CAUTION The pump may never be operated with the suction or delivery line closed!

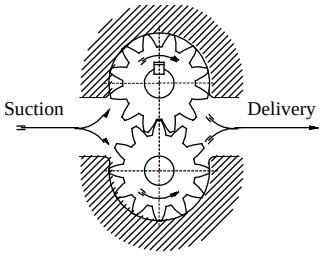

4.3 Mechanical construction

4.3.1 Pump casing

The pump casing encloses the gear wheels and is generally equipped with a suction and delivery connection for the pipes.
Depending on the particular type, it also contains a pressure relief valve and one side of the drive and counter-shaft bearing assembly.
In the case of the disk or plate design, the gear wheels are enclosed by a so-called adapter which has the shape of a plate, the thickness of which corresponds to approximately the length of the gear wheel.
The drive and counter-cover serves to accommodate the shaft bearing.
The shaft seal is accommodated in the drive cover or in a casing.

4.3.2 Gear wheels

Gear wheels have an involute gearing. Straight-tooth spur gears are generally used in feed pumps. Owing to the greater running smoothness, helical-tooth spur gears are given preference in high-speed lube oil pumps in the low pressure range. The gear wheel bodies are generally connected to the shaft by interference fits and, in some cases, also by feather keys. In many cases, shafts and gear wheels are designed as pinions. Materials, surface hardnesses, wear-resistant coatings and gearing quality will depend on the customer's sales order.

4.3.3 Shafts, bearings and lubrication

The pump shafts are mounted in plain bearing bushes. The bearing points must be adequately lubricated by the medium!

CAUTION The pump must always receive fluid and may never be allowed to run dry!

The running play on the sliding surfaces is rated so as to constantly guarantee an adequate lubrication film.
The lower the viscosity of a medium to be pumped, the closer the running play must be kept in order to achieve a favourable volumetric efficiency of the pump. However, this also necessitates a purer medium to be pumped in order to achieve high operating reliability and as long a pump service life as possible.

4.3.4 Shaft seal

On versions with stuffing box packing (P), this packing must drip slightly during operation in order to dissipate the frictional heat.
Ensure that the leakage is safely collected or discharged in controlled fashion.

On versions with axial face seal (G), this seal has only slight or invisible (vapour) leakage losses during operation. It requires no maintenance.

No maintenance is required either on versions with rotary shaft seal (R).

In the case of twin seals, such as GG or GR versions, a quench fluid recipient serves to lubricate and cool the downstream seal. These seal combinations serve to exclude air in the case of media which react in an undesirable manner when coming into contact with atmospheric oxygen.

4.3.5 Drive

CAUTION The pump must be driven free of vibration via a flexible coupling and the drive shaft may be subjected neither to radial forces nor axial forces!
Any radial loading of the shaft journal resulting from V belts, chains, drive gear wheels or so forth is cushioned by an additional radial bearing which is accommodated inside or outside the pump.
Please state the relevant parameters for design of this bearing in your purchase order.

4.4 Accessories

4.4.1 Pressure relief valve

The pump can be delivered with a built-in or mounted pressure relief valve or circulation valve which returns the pumped medium from the delivery end to the suction end in order to protect against overloading of the pump. This valve is suitable for occasional, brief response, not owing to regular operation. Rapid heating of the medium occurs should the valve respond for a longer period, and this may result in undesirable changes and may also disturb proper operation of the pump. We recommend inserting bypass-relief valves in a bypass with a return line to the supply tank for high pressures and long response times.

⚠ The setting of the pressure relief valve may be changed only after procuring the prior consent of the pump manufacturer!

The final pressure of the valve lies 20-30 % above the opening pressure.

4.4.2 Heating and cooling units

Types TM have double-walled casings or corresponding ducts and can be heated or cooled with a liquid or gaseous medium. Temperature sensors in the pump serve to monitor and safeguard the pump against inadmissible switch-on of the drive motor.

Types TE are heated with electrical heating cartridges. The temperature is controlled steplessly by means of a system regulator.

5 Mounting / installation

5.1 Installation position

Unless otherwise agreed, the pump should be mounted / installed so that the drive shaft and counter-shaft are vertically adjacent. The fact that the line connections are then horizontal is the best method of guaranteeing that as large a fluid quantity as possible remains in the pump when the pump is switched off. It then normally inducts this fluid "reservoir" easily again under normal conditions when restarted.

5.2 Mounting for the first time

Base-mounted pumps may be mounted only on precisely level supports, in order to avoid twisting.

Flange pumps must be mounted in a precisely machined flange centring ring. If machines are to be coupled, please ensure that the machines are carefully aligned. Wherever possible, please use torsion-resistant sub-plates or frames.

CAUTION On pump units with a sub-plate made of grey cast iron, please ensure that the deposit surface is absolutely flat and level!

On uneven deposit surfaces, the sub-plates may also be aligned with the aid of shims, but these shims must be well-set (snugly fitting).

5.3 Drive elements

Please also refer to 4.3.5 Drive.

- On a pump with free shaft extension, remove the shaft protection (if applicable, corrosion protection, e.g. with solvent, but not with emery paper).
- Fit and lock the drive element onto the shaft.

CAUTION Fit the coupling using a fitting tool. On no account may you force the coupling on by knocking or tapping since this could damage the shaft, gear wheels, bearing assembly, thrust rings and retaining rings for instance.

5.3.1 Aligning flexible couplings

The unit is correctly aligned if a straight-edge placed axially over both coupling halves is the same distance from the relevant shaft at all points on the circumference, whereby it must be noted that the measurement point must be turned as well by hand.

Moreover, both coupling halves must be the same distance from each other at all points on the circumference. This can be verified with a probe or gauge.

Example: Aligning a flexible coupling without intermediate sleeve or gear rim.

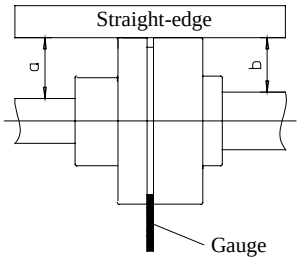

The deviation between the two coupling halves should not exceed 0.3 mm either radially or axially. This must also be ensured at operating temperature and with supply pressure applied.

5.3.2 Coupling guard

In accordance with the accident prevention regulations, the pump may be operated only with a coupling guard. If this coupling guard is not supplied by us, at the express request of the orderer, the operator must provide such a guard.

5.4 Electrical connection

The electrical connection must be made by a qualified electrician in accordance with the applicable safety regulations. Please refer to the Installation Instructions and Operating Manual provided by the motor manufacturer. Please refer to the Installation Instructions and Operating Manual of the equipment manufacturer for safety facilities and control equipment.

5.5 Pipes

5.5.1 Purging

The suction and delivery connection of the pump are sealed with plastic caps. The pump interiors still contain residual quantities of the testing oil or, possibly, a preservation agent. If contractually agreed, pumps are also cleaned by us after the trial run. These pumps are then entirely free of such residue.
Should the pump be purged before initial commissioning, we recommend using either the medium to be pumped or a neutral agent for this purpose. Please do not use water or fluids containing water since this could entail the risk of corrosion, apart from on pumps made of high-grade steel or stainless steel.

CAUTION Before the pump is installed in a new installation, the tanks, pipes and connections must be cleaned thoroughly, flushed through and blown through with compressed air. Welding beads, scale and other contamination frequently only become detached after a certain period. In order to prevent this, please take appropriate measures, such as sandblasting, before installation.

CAUTION Foreign bodies will endanger the operational reliability and safety of the pump and may lead to blockage or total failure.

5.5.2 Connecting pipes

On no account may the pump be used as a fixed support on long pipes. Long pipes must be supported directly ahead of the pump and must be connected free of strain. On no account may their weight be borne by the pump.

Elongation of the pipes resulting from temperature variations must be compensated for by suitable measures.

5.5.3 Additional connections

The dimensions and position of the additional connections required for the pump, e.g. for sealing, purging or leakage fluid, are specified in the installation and piping plan.

5.5.4 Suction line

In the case of short suction lines, the nominal diameter should be at least that of the pump connection. On longer pipes, determine the most economical nominal diameter in each individual case. Adapters for increasing to larger nominal diameters should be designed with as gentle an expansion angle as possible in order to reduce pressure losses.
The suction line should always be as short and straight as possible. The total suction-end resistance may not exceed 0.4 bar in operating condition. In start-up condition, it may be max. 0.65 bar for a period of up to approx. 30 min (until operating temperature is reached).
The total resistance comprises the geodetic suction head and the pipe resistance, including the resistance of any built-in fixtures and fittings. It is measured as a partial vacuum using a vacuum meter directly at the pump suction connection.
The flow velocity is a further characteristic parameter for the suction line. Always endeavour to achieve a value of 1...1.5 m/s for the flow velocity in the case of oil.
A partial vacuum greater than 0.4 bar impairs the pump's volumetric efficiency, thus reducing the delivery capacity and resulting in cavitation. Cavitation causes increasing noise and greater wear in the long term.
Installing a vacuum meter at the pump suction connection is particularly advisable for checking the partial vacuum in the suction line and assessing the degree of contamination of any suction filter installed.

CAUTION The suction line must be absolutely tight !

5.5.5 Delivery line

The operating or delivery pressure must be checked with a pressure gauge fitted directly at the pump delivery connection. The delivery pressure or total resistance comprises the individual resistances of the actuators, the geodetic pressure head and pipe resistances.

CAUTION Line and actuator resistances depend on viscosity. It is advisable to fit a pressure relief valve in order to avoid overloading the pump as the result of inadmissibly high pressure.
The flow velocity in the delivery line should not exceed 3 m/s in the case of oil.
Should there be air in the suction line, this may cause induction problems when starting the pump, e.g.:
- if the pump is to pump against a closed system (loaded non-return valve),
- if two pumps operating in parallel are mutually safeguarded by means of non-return valves.

The situation can be remedied by bleeding the delivery line or by a small bypass line (DN 4-6) upstream of the non-return valve. The bypass is then connected back to the tank.
On forced-circulation lubrication systems such as those conventional in gear construction, cleaning filters must be fitted in the delivery line.
The overall circulating volume of the lube oil must not be selected too low so that it does not overheat as the result of frequent pumping through the circuit and inadequate cooling. A cooler or heat exchanger must be provided if necessary.

5.5.6 Pressure test and leakage test

These tests must be conducted statically **before** the pump is installed. Special-purpose boiler and pipe test pumps must be used for this purpose. On no account may the feed pump be used !

CAUTION Test pressures generally lie substantially above the pump design pressure so that the pump could be damaged. (see also 5.5.1 Purging)

5.6 Protection against foreign bodies and contamination

A distinction is made between two types of contamination:

1. Primary contamination

- Filling and feed pumps are exposed to foreign bodies, dirt particles or mineral pigments which are located in the medium to be pumped.

- Pipe elements, in particular upstream of the pump, may be contaminated with fine dirt particles such as metal swarf, welding or soldering beads or abrasives etc. originating from production or installation.
  (see also 5.5.1 Purging)

2. Secondary contamination

Circulation pumps, e.g. for oil supply systems, are subjected to contamination which, after commissioning, forms continually in the sliding surfaces of the gear components as abrasion or abraded wear in the form of metallic particles and which can be entrained by the lube oil.
Gear pumps can be protected against primary contamination by coarse filters or plate-type filters fitted in the suction line.
Depending on the filter rating, these suction filters retain foreign bodies of a specific size.

CAUTION The filter clogs up gradually as the result of contamination and silting-up, thus impeding induction of the feed stream by the pump. This will be noticeable since the pump will become noisier.
(see also 8.4 Faults)
A filter rating of 0.05 to 0.13 mm is appropriate, depending on pump design. The larger the filter area, the longer will be the maintenance intervals.
Gear pumps are best protected against secondary contamination by means of changeover filters or double self-bypassing filters fitted in the delivery line and designed for continuous filtration. Whilst one filter chamber is in operation, the other is at standby. The filters can be equipped with visual differential pressure indicators or electrical contacts for remote monitoring in order to permit the increasing contamination of the filter to be recognised.
One of the other aspects which must be borne in mind when selecting the filter rating and size is the viscosity range of the lube oil. Consequently, the filter manufacturer should be consulted. Filter ratings of 25-60 µm are conventional for lube oils.

CAUTION Foreign bodies endanger the operational safety and reliability of the pump and may lead to blockage or total failure. Larger quantities of ultra-fine contamination will cause abrasion wear on the sliding surfaces and will reduce the service life of the pump.

6 Starting up / shutting down

6.1 Preparations for starting up

Before starting up, inspect the pump installation in order to establish that it is in proper working order as specified in the technical documentation.

In the case of electric motor-driven pumps, the electrical connections may be made only by a qualified electrician.

CAUTION Facilities for personal safety (e.g. contact guard on clutches and belts) must be fitted.

6.2 Initial commissioning

Ensure that there is adequate medium in the pump before initial commissioning.
Gear pumps are always self-priming pumps. Under normal circumstances, they may induct the air present in the suction line and convey it into the delivery line. It is advisable to also fill the suction line with the medium to be pumped before starting, particularly in the case of extremely unfavourable suction conditions, in order to prevent the pump running dry.

CAUTION Fill the pump and, wherever possible, also the suction line with the fluid to be pumped and then bleed.

Always avoid the pump running dry!
Should there be shut-off elements in the suction or delivery line, these elements must be opened fully. Fully open all additional connections provided, e.g. for sealing or purging fluid etc., and check flow.

Heavy pumps generally have an eyebolt for attaching load suspension devices at the topmost point on the casing. There may be a screw plug at this point on small pumps. Depending on the particular design, the eyebolt is located either in a tapped blind hole or in a through-hole with thread. The latter offers the option of filling or bleeding the pump.

CAUTION Check the direction of rotation. Each pump features a direction-of-rotation arrow. If the pump is operated in the wrong direction, this could entail the risk of overloading the shaft seal and causing it to leak. Pumps suitable for clockwise and counter-clockwise rotation are exceptions to this rule.
The direction of rotation can even be checked with the pump full and with the shut-off elements open by briefly switching the drive on and off.

CAUTION Gear pumps are positive-displacement pumps.
If the pump pumps into a closed delivery line, it will be overloaded and fail.

Pressure relief valves protect pumps against damage and overload (see also 4.4.1 Pressure relief valve).

Proper functioning of the pump can be checked by listening to the noise and by checking the pressure gauge. The time taken from switching on to pumping should not exceed 30 seconds.

6.3 Placing back into operation

In principle, the same procedure as that described in Point 6.2 Initial commissioning must be noted in this case.
If the pump has been placed out of operation for a long period, please check that there is still adequate fluid in the pump in order to ensure reliable re-induction.

CAUTION Check the mobility of the internal components of the pump in the case of media which could set (e.g. by turning the drive shaft).

CAUTION On no account may a cold pump be started up suddenly with a hot medium. The temperature of the pump must be increased slowly in order to avoid seizing of the pump as the result of thermal shock.

6.4 Shutting down

Depending on the particular system, the pump should be allowed to idle for an adequate period - *with the heating source switched off* - until the pumped fluid's temperature has dropped to such an extent as to avoid heat build-up in the pump.
Close the shut-off element in the supply line if the pump has been out of operation for a long period.
Close off additional connections.

The shaft seal must be supplied with sealing fluid even when at standstill on pumps in which the pumped fluid is supplied under vacuum.

Media which set should be drained off. The pump can be used at most only briefly and at low purging pressure in order to clean the pipe system.

CAUTION The intention to use the pump as a purging pump must be known when designing the pump in order to ensure material compatibility.
High purging pressures and long operating times should be avoided in the case of purging or cleaning fluids with poor lubrication properties owing to the risk of jamming or seizing on the sliding surfaces of the pump.

7 Maintenance / repair

7.1 General information

Steimel gear pumps largely require no maintenance under normal operating conditions if they are operated with media having good lubrication properties.

It is advisable to regularly check the performance data. Integration of corresponding monitoring devices, such as operating hours counters, pressure gauges, pressure and temperature monitors etc., will depend on the requirements and the relevant regulations.

Please note the following points when carrying out maintenance work on the overall system:

- Check that all securing screws, bolts and connections are tight and retighten if necessary.

- Check alignment of the coupling. Examine elastomers for wear.

- Check the pump for leaks, in particular the shaft seals.

7.2 Shaft seal

7.2.1 Stuffing box packing

The stuffing box gland nut may be tightened only lightly so that the packing allows slight leakage during operation, thus dissipating the frictional heat.

If the leakage rate is too high after a long operating period, tighten the nuts on the stuffing box gland uniformly by 1/6 of a turn. Then observe the leakage. If it is no longer possible to tighten the stuffing box gland nut, you must fit an extra packing ring. It is generally not necessary to replace the entire packing assembly.
Should it be necessary to renew the packing assembly nevertheless, also assess the condition of the shaft bearing assembly and the seal seat.
If there are signs of major scoring on the shaft, the shaft must be exchanged since, otherwise, this will impair sealing with new packing rings.

The joints of the packing rings or cut ring sections must be mutually offset by approx. 90°.
The joint should be at the top on the last ring at the gland end.
The packing rings must be carefully bent open both axially and radially only sufficiently to permit them to just be slid over the shaft.

7.2.2 Axial face seal / rotary shaft seal

Maintenance of the axial face seal is restricted to occasionally checking for leaks.
Very slight leakage of the axial face seal is permitted.
Should the leakage be higher than this, the axial face seal must be renewed. When doing this, also inspect the pump bearing assembly.

The rotary shaft seal requires no maintenance either. Should it leak, it must be renewed.

7.2.3 Twin seals

On twin seals and combined seals, the quench fluid level in the recipient must be checked constantly and topped up if necessary.

7.2.4 Pressure relief valve

Please follow the steps below should it be necessary to regulate / adjust the opening pressure of the pressure relieve valve:

- Unscrew the pressure cap and undo the lock nut.

- The required opening pressure can be set by turning the threaded bushing / regulating screw which is then accessible.
  Turning clockwise: *increases the opening pressure*.
  Turning counter-clockwise: *reduces the opening pressure.*
  Recommended values for pressure setting: approx. 10 % above the operating pressure / working pressure of the system.

- Screw the pressure cap back on (do not forget the sealant).

7.3 Dismantling and re-assembly

7.3.1 Basic instructions

The unit must be safeguarded so that it cannot be switched on before starting dismantling work.
The shut-off elements in the supply and delivery line must be closed. The pump must have reached ambient temperature.

7.3.2 Dismantling the unit

1. Disconnect the electrical power supply
2. Remove any fitted additional connections

3.: Unit on sub-plate:

3.1. Remove the coupling guard
3.2. Disconnect the motor terminals
Detach the motor from the sub-plate
3.3. Disengage the pump and motor
3.4. by moving the motor's position
3.5. Detach the suction and delivery connection
3.6. Detach the pump from the sub-plate

4.: Unit with pump support / intermediate bracket:

4.1. Disconnect the motor terminals
4.2. Detach the motor
4.3. Detach the suction and delivery connection
4.4. Detach the pump from the pump support / intermediate bracket

7.3.3 Dismantling the pump

Please refer to the various exploded views (if available).
Identify the position of the pump components and number them consecutively!

1. Undo the casing bolts
2. Release the counter-cover from the casing using 2 forcing threads and hexagon bolts
3. Pull the counter-shaft with gear wheel out of the pump casing
4. Release the safety catch on the coupling half and detach it with an extractor tool and then detach the feather key

5 . Version with packing:

5.1. Undo the gland stuffing box

6. Direction of rotation-dependent axial face seal:

6 1. Pull out the axial face seal

7. Direction of rotation-independent axial face seal:
(Please refer to the special Installation Instructions and Operating Manual)

8. Version with single thrust bearing:

8.1. Detach the bearing catch

9. Version with rotary shaft seal:

9.1. Detach the seal locating cover

10. Pull the drive shaft with gear wheel out of the pump casing
11. On pumps with bearing components made of carbon / ceramic material, always ensure that you take great care when dismantling!
Use absolutely no force since these components are fragile and could fracture.

7.3.4 Assembling the pump / unit

Follow the generally valid rules applicable in the field of mechanical engineering and machine construction when re-assembling.
O-rings must be inspected for damage and must be replaced by new O-rings if necessary.

Flat gaskets must always be renewed. Ensure that the new gasket has precisely the same thickness as the old gasket.
Hylomar SQ 32/M or Epple 33 for instance may be used as permanently elastic universal seals.
All seal and gasket residue must be removed completely. When re-assembling, follow the reverse procedure to that followed when dismantling.

- Stuffing box packing, see Point 7.2.1
- Rotary shaft seal
  - Always use new rotary shaft seals.
  - Always ensure that they are fitted in the correct position.
  - The sealing edge of the new ring should not be at the position of the sealing edge on the old ring.
  This can be achieved by:
  - exchanging the shaft or shaft bushing
  - fitting with a spacer ring
  - pressing in to different depths in the location hole.
  - Use a press-in tool and a suitable press-in die when pressing in.
  - *Make sure that you do not damage the sealing lip at sharp edges when sliding into the shaft!*
  - On smooth shafts, round off the keyways and turned grooves. Fitted shafts should have a conical bevel. If this is not possible, an installation sleeve must be used to assist in assembly.
- Axial face seal

please refer to the special Installation Instructions and Operating Manual

- Pressure relief valve
  please refer to Point 7.2.4

7.4 Spare parts

Keeping a stock of the most important spare parts and parts subject to wear at the installation site is an important precondition for ensuring that the pump is always ready for operation.
On the other hand, we recommend that you keep in stock a reserve pump and return the removed pump to our works for repair if necessary.

Please refer to our spare parts list with cutaway view when ordering spare parts.

We are able to assume warranty only for original spare parts supplied by us.

It must be expressly pointed out that spare parts and accessories not supplied by us are not tested by us and are not approved by us. Installation and/or use of such products may thus impair design characteristics of the pump and thus endanger active and/or passive safety. We are unable to accept liability and accept claims under warranty for damage and loss occurring as the result of using non-original spare parts and accessories.

Please state the following information when submitting orders for spare parts:

- Contract No. / Serial No.
- Part No.
- Quantity

8 Related documents

Please refer to the technical data sheet or the sales order confirmation for the related documents.

FAULTS; CAUSES AND REMEDIES

Faults								Cause	Remedy	
Pump not inducting	Pump delivery rate too low	Irregular pumping	Pump overheating	Sound pressure level too hig	Valve cone chattering	Motor overheating	Pump seizes up			
a	b	c	d	e	f	g	h			
→								Incorrect direction of rotation	Check direction of rotation as shown by arrow on pump; reverse polarity of motor if direction of rotation is incorrect	1
→	→			→			→	Pump not filled Fluid seal inadequate	Fill and bleed pump and, if necessary, suction line	2
→	→			→				- Suction line leaking - Shaft seal leaking - Screw plugs on pump leaking - Pressure cap on pressure relief valve missing or leaking	- Seal in suction line again - Renew shaft seal - Tighten screw plugs or seal them in again (possibly eyebolt) - Screw on and tighten pressure cap with seal	3
→	→			→				- Suction head excessive / inflow inadequate; Suction filter clogged or too small - Internal parts worn	- Check suction head / resistance and, if necessary, increase the line cross section or shorten the length of the line - if necessary, clean suction filter or fit a larger suction filter - Renew worn parts	4
→								No bleed facility in the delivery line Inducting against non-return valve	Install small bypass line (DN 4) with return line into the oil tank upstream of the nonreturn line. Alternatively: attach bleed cock	5
→	→	→						- Partial flow via pressure relief valve, valve cone jamming - Suction and delivery line clogged	- Remove valve cone and remachine it or renew it - Clear clogging or deposits	6
				→	→			- Valve spring operating in resonance range - Valve cone beating against seat	- Fit new valve spring - Adjust the opening pressure	7
	→	→						Pressure relief valve opening too early	Set pressure relief valve to a higher value (10% above operating pressure) Renew valve spring if it is slack	8
				→				- Gearwheels running unstably - Construction/mounting not noise-optimised	- Load pump at 1-2 bar in the case of unpressurised pumping of thin-bodied media - Isolate structure-borne noise by vibration dampers, provide acoustic hoods	9
	→	→		→				Air inclusions in circulation system Inadequate bleeding Pumped medium frothing	Return lines must enter the tank below the oil level, lay suction and return connections further apart in the tank, increase bleed area / oil level area	10
	→	→		→				Volumetric efficiency of pump too low / viscosity too high	Reduce the speed of rotation when pumping highly viscous media	11

FAULTS; CAUSES AND REMEDIES

Faults								Cause	Remedy	
Pump not inducting	Pump delivery rate too low	Irregular pumping	Pump overheating	Sound pressure level too hig	Valve cone chattering	Motor overheating	Pump seizes up			
a	b	c	d	e	f	g	h			
								- Delivery pressure too high	- Reduce pressure / increase size of delivery line / reduce resistances	
								- Speed of rotation too high	- Reduce speed of rotation	
								- Defective bearing	- Inspect bearing assembly and repair it	
			→					- Plain bearings overloaded owing to inadequate lubricatior	- Improve bearing lubrication [1]	12
								- Inadequate viscosity of pumped medium	- Reduce temperature	
								- Unit poorly aligned	- Align unit	
								- Stuffing box packing overtightened	- Slacken stuffing box gland nut	
								- Power consumption too high	- Compare voltage and frequency with motor rating plate, install higher-power motor, reduce speed of rotation	
	→					→		- Running on 2 phases	- Repair motor or renew defective fuse	13
								- Inadequate cooling	- Improve cooling air supply	
								- Excessive viscosity of pump medium	- Heat medium to be pumped / install additional heater	
				→				- Motor bearing assembly defective	- Repair bearing assembly	
							→	Foreign bodies in pump	Dismantle pump and remove any foreign bodies, smooth damaged points with oilstone / install a filter	14
							→	Seized bearing assembly	Check whether the material has lost its lubricating properties owing to excessively high temperature Dismantle pump and repair it; return pump to works if necessary	15
									1) Please enquire with us	

ENGLISH

Information on safety and commissioning for low voltage asynchronous motors

(in accordance with L. V. directive 73/23/EEC)

Types: 5AP, 6AP,C,F,16BA,7BA,7AA

Shaft height: 56 to 315 mm

1 General information

Electric motors have dangerous voltage-carrying and rotating components as well as surfaces that may become hot. All work involved in the transport, connection, commissioning and regular maintenance must be carried out by **qualified, responsible specialists** (note VDE 0105; IEC 364). Improper behaviour may result in serious **injury** and **damage to property**. The applicable **national, local** and **works regulations** and **requirements** must be complied with.

2 Intended use

These motors are intended for commercial installations. They comply with the harmonized standards of the **EN60034 (VDE 0530)** series. Utilization in areas subject to **explosion hazard is not permitted**, unless **expressly intended** for this purpose (see additional notes). In certain special cases, for example, on use in non-commercial installations, if requirements are more strict (e.g. protection against contact with children's fingers), it is the responsibility of the customer to ensure compliance on installing the equipment.
The motors are rated for ambient temperatures of **-20°C to +40°C** and site altitudes ≤ **1000 m** above sea level. Any contradictory information on the rating plate **must** be observed. The conditions on site **must** correspond to all rating plate specifications.

> Low voltage motors are **components** for installation in machinery in terms of the Machine directive 89/392/EEC. **Commissioning** must not take place until it has been proved that the end product conforms with this guideline (please note EN 60204-1).

3 Transport and storage

Any **damage** detected after dispatch should be reported immediately to the transport company and **commissioning** must be postponed. Tighten the eyebolts. They are designed for the weight of the motor only therefore do not attach any additional loads. If necessary, use suitable, adequately dimensioned transporting equipment (e.g. rope guides).
Remove existing **shipping braces** before commissioning; and reuse for subsequent transport. If motors are stored, a **dry**, **dust-free** and **low vibration** (v_{rms} ≤ 0.2 mm/s) environment is important (to avoid bearing standstill damage). On long-term storage, the regrease interval of the bearings is reduced.
Before commissioning, measure the impedance of the insulation. If values ≤1kΩ per volt of rated voltage are measured, the windings must be dried out.
When motors with roller bearings for increased cantilever force are operated the value of cantilever force must be minimal 30% of permissible cantilever force (see catalogue). Operating with smaller cantilever force is the cause of bearing faults.

4 Installation

Ensure an even underlying surface, good foot or flange fixing and precise alignment for direct coupling. It is important to ensure that the mounting conditions do not cause resonance with the rotational frequency and the doubled supply frequency. Turn the rotor **by hand** and listen for any unusual grinding noises. **Check** the **direction of rotation** in the decoupled state (note section 5).
Only mount or remove drive components (belt pulley, coupling, etc.) using suitable tools (heat up), and cover to shield against contact. Avoid unpermissible belt tensions (see catalogue and technical data).
The **balancing type** is specified on the shaft end face or rating plate (**H** = half- and **F** = full-key balancing). On mounting the drive, note the balancing type! In the case of half key balancing, the **protruding, visible part** of the half-featherkey must be removed.
A canopy is recommended for designs with the shaft end pointing downwards, and with the shaft end pointing upwards a cover must be **provided by the customer** to prevent foreign bodies from falling into the fan.

Do not obstruct ventilation! Discharged air, also from neighbouring equipment, must not be sucked in again immediately.
Checking of bearing grease must be carry out when motors are longer than 12 months storaged. When storage conditions are the cause of grease depreciation (presence of condensate, consistency change) the grease must be exchanged. Grease exchangr must be carry out no later than in three year interval.

5 Electrical connection

Work is only permitted to be carried out by **qualified specialists** on the **stationary motor**, while **disconnected** and **prevented from being switched on again**. This also applies for the auxiliary power circuits (e.g. Anti-condensation heaters).

Check that the equipment is potential-free!

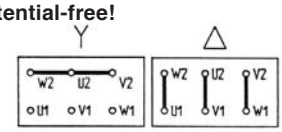

If the **tolerance limits** are exceeded that are specified in **EN 60034, part 1 / IEC 34-1** (voltage ± 5%, frequency ± 2%, shape of curve, symmetry) the heating effect is increased and the electromagnetic compatibility is affected. Please note the specifications on the rating plate and the connection diagram in the terminal box.
Connections must be made in such a way as to ensure that a **permanently** safe electrical connection is maintained (no protruding wire ends); use the corresponding cable end pieces. Create a **safe earth continuity connection**.

Tightening torques for terminal board connections

	Thread Ø	M4	M5	M6	M8	M10	M12	M16
	Tightening torque [Nm]	0,8.. ..1,2	1,8.. ..2,5	2,7.. ..4	5,5.. ..8	9.. ..13	16.. ..20	36.. ..40

Clearences in air between bare live parts themselves and between bare live parts and earth must be ≥ 5,5 mm (U_{rated} ≤ 690 V) .

It must be ensured that the terminal box does not contain **foreign** bodies, dirt or humidity. Seal any unused cable entry openings against **dust** and **water**.
Secure the **featherkey** on test operation without drive components. For motors with brakes, check that the brakes are operating perfectly before commissioning.

6 Operation

Vibration levels of v_{rms} ≤ 3.5 mm/s (P_N ≤ 15 kW) or v_{rms} ≤ 4.5 mm/s (P_N > 15 kW) are quite acceptable in the coupled state.
If deviations from normal operation occur - e.g. **increased temperatures, noises, vibration** - the motor should be **switched off** in the event of doubt. Determine the causes and contact the manufacturer if necessary. Do not disconnect protective equipment, even under test operation.
Under dirty operating conditions, clean the air channels regularly. Open any closed **condensate water** holes from time to time!

For motors **without regreasing facilities**, bearing or grease replacement must be carried out in accordance with the manufacturer's instructions, or after 3 years, whichever is sooner.
Bearings **with regreasing facilities** must be regreased when the motor is running.
In the case of **motors with separate ventilation**, the separately-driven fan must be switched on throughout motor operation.

7 Further information

Information provided about any additional equipment must be noted!

These notes on safety and commissioning must be retained for future reference!

SIEMENS

BG 225 S, M ≙ BG 200 L

Drehstrommotoren

Three-Phase Motors
Moteurs triphasés
Motores trifásicos
Motori trifasi
Trefasmotorer

1LA5 1LB5 1LC5 1LP5 1PP5 1LA9 1LP9 1PP9
1MA5 *1MF5*

Betriebsanleitung/Instructions

Bestell-Nr./Order No.: 610.42348.21.a

Ausgabe / Edition: 1.94

DEUTSCH / ENGLISH / FRANÇAIS / ESPAÑOL / ITALIANO / SVENSKA

Baugrößen (BG)
Frame sizes (BG)
Désignation de carcasse (BG)
Tamaños constructivos (BG)
Grandezze (BG)
Storlekar (BG)

BG 100L ... 112M

1LA5 IM B3

BG 132S ... 160L

1LA5 IM B3

BG 180M ... 200L

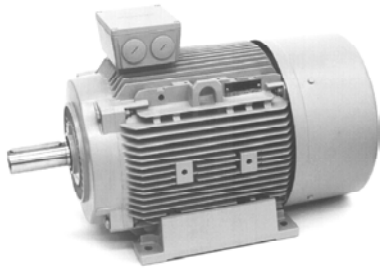

1LA5 IM B3

Bauformen / Types of construction / Formes de construction / Formas constructivas / Forme costruttive / Monteringssätt

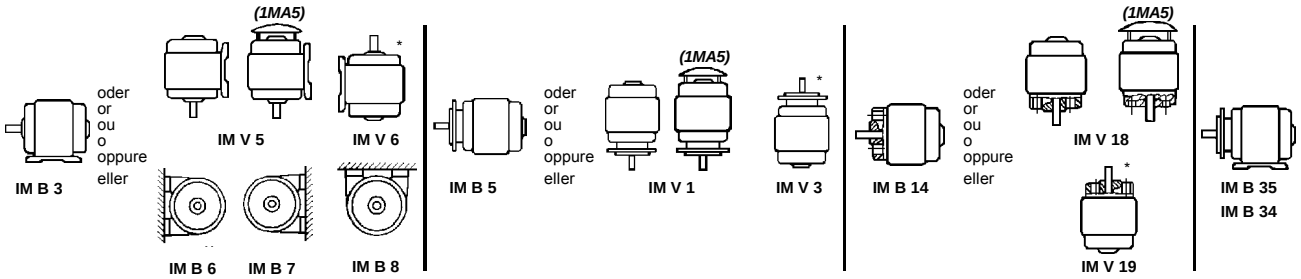

Fig. 1

** s. "4 EEx e Motoren" / see "4 EEx e motors" / voir "4 Moteurs EEx e " / véase "4 Motores EEx e "/ cfr. "4 Motori EEx e " / se "EEx e-Motorer"*

Alle Rechte vorbehalten. All rights reserved.
Tous droits réservés. Reservados todos los derechos.
Tutti i diritti riservati. All rätt förbehålles.

DEUTSCH

Allgemeine Hinweise

⚠ WARNUNG Zu beachten sind die Angaben und Anweisungen in allen gelieferten Betriebs- und sonstigen Anleitungen. Dies ist zur Vermeidung von **Gefahren** und **Schäden** unerläßlich!
Eine zusätzliche Sicherheitsinformation (gelb) liegt bei, die ergänzende Angaben zur Sicherheit für elektrische Maschinen enthält. Diese Sicherheitsinformation ist deshalb eine Ergänzung für alle weiteren noch gelieferten Betriebs- und sonstigen Anleitungen.

Weiterhin sind die jeweils geltenden **nationalen, örtlichen** und **anlagespezifischen Bestimmungen und Erfordernisse** zu berücksichtigen!

Sonderausführungen und **Bauvarianten** können in technischen Details abweichen! Bei eventuellen Unklarheiten wird dringend empfohlen, unter Angabe von **Typbezeichnung und Fabriknummer** beim Hersteller rückzufragen, oder die Instandhaltungsarbeiten von einem der SIEMENS - Servicezentren durchführenzulassen.

HINWEIS: Fig. 2 ... (Ersatzteile) s. Anhang auf Seite 16

1 Beschreibung

1.1 Anwendungsbereich

Die Motoren können in staubiger oder feuchter Umgebung aufgestellt werden. Die Isolierung ist tropenfest. Bei sachgemäßer Lagerung oder sachgemäßer Aufstellung im Freien sind normalerweise gegen Witterungseinflüsse keine besonderen Schutzmaßnahmen an den Motoren notwendig.

Meßflächenschalldruckpegel bei 50Hz (DIN EN 21 680 Teil 1)
1LA5, *1MA5* ca. 51 bis 76 dB(A)

1.2 Aufbau und Arbeitsweise

1LA5-, 1LA9-, 1LB5-, 1LC5- und *1MA5*-Motoren sind eigengekühlt (mit Lüfter). 1PP5- und 1PP9-Motoren sind eigengekühlt entweder - z. B. beim Einsatz als Lüftermotoren - durch einen auf dem Wellenende angeordneten Sonderlüfter, oder durch Fremdlüfter. 1LP5-, 1LP9- und *1MF5*-Motoren sind selbstgekühlt (ohne Lüfter).
Bei Fußmotoren sind die Füße bei den Baugrößen 100L und 112M am Motorgehäuse angegossen, bei den Baugrößen 132S bis 200L an das Motorgehäuse angeschraubt (s. Fig. 2).

Ein Umsetzen der Füße am Motorgehäuse, z. B. zwecks Veränderung der Klemmenkastenlage (s. Fig. 5), ist daher nur bei den Baugrößen 132S bis 200L möglich. Bei BG180M ... 200L sind nachträglich Gewinde in die vorhandenen Bohrungen am Motorgehäuse zu schneiden, um die Motorfüße zu befestigen. Allerdings müssen anschließend die Fußstandflächen durch Nacharbeit wieder in eine Ebene gebracht und bei Bedarf unterlegt werden.
Bei 1LC5-Motoren ist zusätzlich die Bremsenbetriebsanleitung mit zu beachten!

© Siemens AG 1991

2 Betrieb

⚠ WARNUNG **Alle Arbeiten nur im elektrisch spannungslosen Zustand der Anlage durchführen.**

2.1 Transport, Lagern

Beim Transport sind alle vorhandenen **Hebeösen** am Motor zu benutzen!

⚠ WARNUNG **Zum Transport von Maschinensätzen (z. B. Getriebe-, Gebläseanbauten, ...) nur die dafür vorgesehenen Hebeösen bzw. -zapfen benutzen! Maschinensätze dürfen nicht durch Anhängen an den Einzelmaschinen gehoben werden! Auf Tragfähigkeit dieser Hebeeinrichtung achten!**

Die **Wälzlager** sollten neu gefettet bzw. erneuert werden, wenn die Zeit von der Lieferung bis zur Motorinbetriebnahme bei günstigen Bedingungen (Aufbewahrung in trockenen, staub- und erschütterungsfreien Räumen) mehr als 4 Jahre beträgt. Bei ungünstigen Bedingungen verringert sich diese Zeit wesentlich.

Ggf. ist der Isolationswiderstand der Wicklung zu überprüfen, s. Abschnitt 2.5 .

2.2 Aufstellung

Eingeschraubte Hebeösen sind nach dem Aufstellen festanzuziehen oder zu entfernen!

Bei **Motoren mit Wellenende nach oben oder unten** (z.B. IMV5, IMV6 - s. Fig. 1) muß gewährleistet sein, daß kein Wasser in das obere Lager eindringen kann.

Das **Klemmenkastenoberteil** kann bei einem Klemmenbrett mit 6 Anschlußklemmen um 4x90 Grad und bei einem Klemmenbrett mit 9 Anschlußklemmen um 180 Grad gedreht werden.

Laufruhe
Stabile Fundamentgestaltung oder An- und Einbauverhältnisse, genaues Ausrichten der Motoren sowie ein gut ausgewuchtetes Abtriebselement sind Voraussetzung für einen ruhigen schwingungsarmen Lauf. Z. B. sind dünne Bleche unter die Füße zu legen, um ein Verspannen der Motoren zu vermeiden oder ggf. kann ein komplettes Auswuchten des Läufers mit dem Abtriebselement erforderlich sein.

2.3 Wuchtung, Abtriebselemente

Das Auf- und Abziehen von Abtriebselementen (Kupplungen Riemenscheiben, Zahnrad, ...) ist mit einer geeigneten Vorrichtung auszuführen (Fig. 7).

Standardmäßig sind die Läufer mit einer vollen Paßfeder dynamisch ausgewuchtet.
Ab Fertigung 1991 ist die Art der Auswuchtung am AS-Wellenende (Wellenstirnseite) markiert:
(**F =** Auswuchtung mit **voller** Paßfeder)
(**H =** Auswuchtung mit **halber** Paßfeder - Sonderausführung)

Bei Montage des Abtriebselementes auf entsprechende Auswuchtart achten!

Auswuchtung mit halber Paßfeder
Bei Abtriebselementen mit einem Längenverhältnis von Nabenlänge l zur Länge des Wellenendes l_M < 0,8 und Drehzahlen > 1500/min können Laufruhestörungen auftreten (s. Fig. 8).
Ggf. ist eine Nachwuchtung vorzunehmen, z. B. ist der aus dem Abtriebselement und über der Wellenkontur herausragende Teil der Paßfeder T_P abzuarbeiten.

⚠ WARNUNG **Zu beachten sind die allgemein erforderlichen Maßnahmen für den Berührungsschutz der Abtriebselemente.**

Wird ein Motor ohne Abtriebselement in Betrieb genommen, so ist die Paßfeder gegen Herausschleudern zu sichern.

2.4 Elektrischer Anschluß

Netzspannung und Netzfrequenz müssen mit den Daten auf dem Leistungsschild übereinstimmen. ±5% Spannungs- oder Frequenzabweichung *(1MA5/1MF5 ±3% Frequenzabweichung)* sind ohne Leistungsherabsetzung zulässig. Anschluß und Anordnung der Schaltbügel nach dem im Klemmenkasten befindlichen Schaltbild vornehmen. Schutzleiter an diese Klemme ⏚ anschließen.

Bei Anschlußklemmen mit Klemmbügeln (z. B. nach DIN 46282) sind die Leiter so zu verteilen, daß auf beiden Stegseiten etwa gleiche Klemmhöhen entstehen. Diese Anschlußart erfordert daher, daß ein einzelner Leiter U-förmig gebogen werden muß oder mit einem Kabelschuh anzuschließen ist (s. Fig. 3.1). Dies gilt auch für den Schutzleiteranschluß und den äußeren Erdungsleiter (s. Fig. 3.2) - grüngelb .

Anziehdrehmomente für Schraubenverbindungen der elektrischen Anschlüsse - Klemmenbrettanschlüsse (außer Klemmenleisten) s. Fig. 4.

2.5 Überprüfung des Isolationswiderstandes

Vor der Erstinbetriebnahme des Motors, nach längerer Lagerung oder Stillstandzeit (ca. 6 Monate), muß der Isolationswiderstand der Wicklungen ermittelt werden.

⚠ WARNUNG **Bei und unmittelbar nach der Messung haben die Klemmen teilweise gefährliche Spannungen und dürfen nicht berührt werden.**

Isolationswiderstand
- Der **Mindestisolationswiderstand** von neuen, gereinigten oder instandgesetzten Wicklungen gegen Masse beträgt 10 MegaOhm.
- Der **kritische Isolationswiderstand R_{krit}** wird zunächst errechnet. Berechnung erfolgt durch Multiplikation der Bemessungsspannung U_N, z. B. AC 0,69 kV, mit dem konstanten Faktor (0,5 MegaOhm/kV):
  R_{krit} = 0,69 kV * 0,5 MegaOhm/kV = 0,345 MegaOhm

Messung
Der **Mindestisolationswiderstand** der Wicklungen gegen Masse wird mit 500 V Gleichspannung gemessen. Dabei soll die Temperatur der Wicklungen 25°C ± 15°C betragen.
Der **kritische Isolationswiderstand** ist bei Betriebstemperatur der Wicklung mit 500 V Gleichspannung zu messen.

Überprüfung
Ist bei neuer, gereinigter oder instandgesetztem Motor, der längere Zeit gelagert wurde oder still stand, der **Mindestisolationswiderstand** der Wicklung gegen Masse kleiner 10 MegaOhm, kann die Ursache hierfür Feuchte sein. Die Wicklungen sind dann zu trocknen.

Nach längerer Betriebsdauer kann der **Mindestisolationswiderstand** auf den **kritischen Isolationswiderstand** absinken. Solange der gemessene Wert den errechneten Wert des **kritischen Isolationswiderstandes** nicht unterschreitet, darf der Motor weiter betrieben werden. Wird dieser Wert unterschritten, ist der Motor sofort abzuschalten.
Es ist die Ursache hierfür zu ermitteln, ggf. sind die Wicklungen oder Wicklungsteile instand zusetzen, zu reinigen oder zu trocknen.

2.6 Inbetriebnahme

HINWEIS: Bei **stark ungleichförmigem Drehmoment** (z.B. Antrieb eines Kolbenkompressors) wird ein nicht-sinusförmiger Motorstrom erzwungen, dessen Oberschwingungen sowohl eine unzulässige Netzbeeinflussung als auch unzulässig hohe elektromagnetische Störaussendungen bewirken können.

Bei **Speisung durch Umrichter** können hochfrequente Strom- und Spannungsoberschwingungen in den Motorzuleitungen zu elektromagnetischen Störaussendungen führen. Deshalb wird die Verwendung abgeschirmter Zuleitungen empfohlen.

Vor Inbetriebnahme ist zu prüfen ob:
- die Mindestisolationswiderstände eingehalten sind
- der Läufer ohne anzustreifen gedreht werden kann
- der Motor ordnungsgemäß montiert und ausgerichtet ist
- die Abtriebselemente richtige Einstellbedingungen haben (z. B. Riemenspannung bei Riementrieb; ...) und das Abtriebselement für die Einsatzbedingungen geeignet ist
- alle elektrischen Anschlüsse sowie Befestigungsschrauben und Verbindungselemente nach Vorschrift angezogen und ausgeführt sind
- der Schutzleiter ordnungsgemäß hergestellt ist
- eventuell vorhandenen Zusatzeinrichtungen (Bremse, ...) funktionsfähig sind

- Berührungsschutzmaßnahmen für bewegte und spannnungsführende Teile getroffen sind
- die Grenzdrehzahl n_{max} (s. Leistungsschild) nicht überschritten wird;
  HINWEIS: Die Grenzdrehzahl n_{max} ist die höchste kurzzeitig zulässige Betriebsdrehzahl. Es ist zu beachten, daß sich hierbei das Geräusch- und Schwingungsverhalten des Motors verschlechtert sowie die Lagerwechselfrist verringert.

VORSICHT **Nach dem Anbau der Motoren ist die Bremse (falls vorhanden) auf ihre einwandfreie Funktion zu prüfen!**

Diese Aufzählung kann nicht vollständig sein. Zusätzliche Prüfungen sind gegebenenfalls nötig!

3 Instandhaltung

Sicherheitsmaßnahmen

WARNUNG **Vor Beginn jeder Arbeit am Motor oder Gerät, besonders aber vor dem Öffnen von Abdeckungen aktiver Teile, muß der Motor vorschriftsmäßig freigeschaltet sein. Neben den Hauptstromkreisen ist dabei auch auf eventuell vorhandene Zusatz- oder Hilfsstromkreise zu achten.**
Die üblichen "5 Sicherheitsregeln" lauten hierbei z. B. nach DIN VDE 0105:

- Freischalten
- Gegen Wiedereinschalten sichern
- Spannungsfreiheit feststellen
- Erden und Kurzschließen
- Benachbarte unter Spannung stehende Teile abdecken oder abschranken.

Diese zuvor genannten Maßnahmen dürfen erst dann zurückgenommen werden, wenn die Instandhaltungsarbeiten abgeschlossen sind und der Motor vollständig montiert ist.

HINWEIS: Sofern Motoren mit verschlossenen Kondenswasseröffnungen (z.B. Schutzart IP55 oder IP56, s. Leistungsschild) ausgeführt sind, müssen diese von Zeit zu Zeit geöffnet werden, damit eventuell angesammeltes Kondenswasser abfließen kann.

Kondenswasseröffnungen sind stets an der tiefsten Stelle des Motors anzuordnen!

Lagerwechsel, Fettsorte

Die Lagerwechselfrist ist unter normalen Betriebsbedingungen, bei waagerechter Motoraufstellung, Kühlmitteltemperatur bis 40°C und einer Motordrehzahl von

- 1500/min ca. 20 000 Betriebsstunden
- 3000/min ca. 10 000 Betriebsstunden.

Unabhängig von den Betriebsstunden sollte das Fett, wegen der Alterung, etwa alle 3 Jahre erneuert werden.

Bei besonderen Betriebsbedingungen, z. B. senkrechter Motoraufstellung, häufigem Betrieb bei der Grenzdrehzahl n_{max}, großen Schwingungs- und Stoßbelastungen, häufigem Reversierbetrieb, reduzieren sich die vorstehend genannten Betriebsstunden wesentlich.

Die Motoren haben Rillenkugellager mit einer Deckscheibe (ZC3 Ausführung).

Die Deckscheibe ist auf der dem Motorgehäuse (Ständer) zugewandten Lagerseite angeordnet.
HINWEIS: Beim Lagerwechsel ist auf die Anordnung der Deckscheibe zu achten, da bei Sonderausführungen die Anordnung von der Standardausführung abweichen kann!

Das Material der Scheiben sollte temperaturbeständig von -20°C bis +150°C sein, z. B. Polyacryl-Kautschuk (ACM).

Fettsorte bei Standardmaschinen: UNIREX N3 (Fa. ESSO); Ersatzfette müssen der DIN 51825-K3N genügen.
Sonderfette sind auf dem Leistungsschild angegeben.

Das Mischen von verschiedenen Fettsorten ist zu vermeiden!

Motor im erforderlichen Umfang zerlegen. Wälzlager mit geeigneter Vorrichtung abziehen (s. Fig. 6). Lagerstelle von Verunreinigungen säubern! Wälzlager reinigen bzw. erneuern und neu fetten.

Hohlräume der Wälzlager bündig mit Schmierfett füllen! Lagerdeckel bzw. Lagerschild bleibt ohne Fettfüllung, um eine Überfettung zu vermeiden.
Wälzlager gleichmäßig auf ca. 80-100°C erwärmen und aufziehen. Harte Schläge (z. B. mit einem Hammer, ...) sind zu vermeiden.

Eventuell abgenützte Dichtelemente (z. B. Wellendichtring, usw.), sind ebenfalls zu erneuern.
Sind Radial-Wellendichtringe ohne Feder eingebaut, so muß auch das Ersatzteil ohne Feder eingesetzt werden.

Nachschmiereinrichtung
Bei Motoren mit Nachschmiereinrichtung sind die Angaben auf dem Leistungsschild zubeachten!

Fugenabdichtung
Beim Zusammenbau von Maschinen der Schutzart IP 55 oder höher (s. Leistungsschild) müssen die blanken Montageflächen zwischen dem Motorgehäuse und den Lagerschilden durch eine geeignete, nicht aushärtende Dichtungsmasse abgedichtet werden z. B. Fluid-D.

Kunststofflüfter (BG180M ... 200L)
Kunststofflüfter haben jeweils zwei angegossene Zungen, die als Axialfixierung in die Ringnut der Welle einrasten. Vor dem Abziehen des Lüfters müssen die beiden Zungen ausgerastet und in dieser Position, z.B. durch eingeschobene Beilagen, provisorisch festgehalten werden. Die Lüfter haben in der Tragscheibe zwei Öffnungen zum Durchführen einer Abziehvorrichtung, die an der Nabe angreifen soll.
Die Öffnungen können bei Auslieferung mit einer dünnen Kunststoffhaut verschlossen sein.
Zum Abziehen wie auch zum Aufziehen muß grundsätzlich eine geeignete Vorrichtung verwendet werden. Hammerschläge sind hierbei unbedingt zu vermeiden.

4 *EEx e-Motoren 1MA5, 1MF5*

DIN EN 50014/VDE 0170/0171 Teil 1 und
DIN EN 50019/VDE 0170/0171 Teil 6

Für diese Motoren gelten ergänzend oder speziell die Informationen in kursiver Schrift!
**Bei Wellenende oben, z. B. Bauformen IMV3, IMV6, IMV19 (s. Fig. 1), ist bei 1MA5-Motoren eine Abdeckung anzuordnen, die ein Hineinfallen von Fremdkörpern in die Motorlüfterhaube verhindert (s. DIN EN 50014/ VDE 0170/0171 Teil 1, Abschnitt III,16.1). Sie darf die Kühlung des Motors durch seinen Lüfter nicht behindern.*
Die auf dem Leistungsschild angegebene Temperaturklasse des Motors muß mit der Temperaturklasse des möglicherweise auftretenden brennbaren Gases übereinstimmen. Jedem Motor muß ein Motorschutzschalter vorgeschaltet sein, der auf den Motorbemessungsstrom einzustellen ist und der bei festgebremstem Läufer innerhalb der auf dem Motorleistungsschild angegebenen Zeit t_E auslöst (Prüfung anhand der dem Motorschutzschalter beiliegenden Auslösekennlinie). Bei Dreieckschaltung muß ein Überlastschutz mit Phasenausfallschutz vorgesehen werden. Polumschaltbare Motoren benötigen für jede Polzahl einen eigenen Schalter.
Soll aber der Überlastschutz ausschließlich durch eine direkte Temperaturüberwachungseinrichtung mit Hilfe von Temperaturfühlern (s. DIN EN 50019/VDE 0170/0171 Teil 6, Anhang A-A1.b) vorgenommen werden so muß die Ausführung des Motors hierfür gesondert geprüft und bescheinigt sein.
Auf DIN 57165/VDE 0165 wird hingewiesen.
Reparaturen müssen in Siemens-Werkstätten durchgeführt oder von einem amtlich anerkannten Sachverständigen abgenommen werden.

General note

⚠ WARNING The data and recommendations specified in all the instructions supplied, and in all other related instructions, must always be observed in order to avoid **hazardous situations** and the **risk** of possible injury or damage.
These instructions are augmented by supplementary instructions (yellow), which contain additional information on the safety measures for electrical machines and devices. The latter instructions thus augment all submitted instructions and all other related instructions.

Furthermore, the **pertinent national, local** and **plant-specific regulations** and **requirements** should be kept in mind!

Special designs and **other versions** may vary in technical details! If in doubt, be sure to contact the manufacturer, quoting the **type designation** and **serial number**, or have maintenance work done by one of SIEMENS Service Centres.

NOTE: Fig. 2 ... (Spare Parts) see Annex page 16

1 Description

1.1 Application

The motors are suitable for operation in dusty and damp environments. The insulation is tropicalized. If they are properly stored or installed outdoors, special weatherproofing measures are not usually required.

Measuring-surface sound-pressure level at 50 Hz
(DIN EN 21 680 Part 1)
1LA5, *1MA5* approx. 51 to 76 dB(A)

1.2 Construction and mode of operation

1LA5, 1LA9, 1LB5, 1LC5 and *1MA5* motors are self-ventilated (with fans). 1PP5 and 1PP9 motors are self-ventilated either by separate fans arranged on the rotors, such as for service as fan motors, or by external fans. 1LP5, 1LP9 and *1MF5* motors are non-ventilated (without fans).

The feet on foot-mounted motors with frame sizes 100L and 112M are cast integrally with the frame. The feet on motors with frame sizes 132S to 200L are bolted onto the frame (see Fig. 2).

For this reason, rearranging the feet (such as for changing the position of the terminal box- see Fig. 5) is only possible on frame sizes 132S to 200L. With frame sizes 180M...200L, threads will also have to be cut in the existing drilled holes in the frame to receive the foot mounting screws. In such cases, however, the support faces of the feet may have to be remachined or provided with shims to ensure that the motor is level.
Where 1LC5 motors are concerned, please also observe the brake operating instructions.

2 Operation

⚠ WARNING **Before starting any work on the machine, be sure to isolate it from the power supply.**

2.1 Transport, storage

The motors should always be lifted at both **lifting eyes** during transport.

⚠ WARNING **For lifting machine sets (such as built-on gearboxes, fan units), always use the lifting eyes or lifting pegs provided! Machine sets may not be lifted by suspending the individual machines! Check the lifting capacity of the hoist!**

If, after delivery, the motors are stored for more than 4 years under favourable conditions (kept in a dry place free from dust and vibration) prior to commissioning, the bearings should be regreased.
Under unfavourable conditions, this period is considerably shorter.

If necessary, the insulation resistance of the winding should be checked, see Section 2.5.

2.2 Installation

After installation, **screwed-in lifting eyes** should either be removed or tightened down.

In the **case of motors with shaft end facing upwards or downwards** (such as IMV5, IMV6 - see Fig. 1), measures must be taken to ensure that no water can penetrate into the upper bearing.

In the case of **terminal boards** with 6 terminals, the top part of the terminal box can be turned through 4 x 90 degrees. For terminal boards with 9 terminals, it can be turned through 180 degrees.

Quiet running
Stable foundations or mounting conditions, exact alignment of the motors and a well-balanced transmission element are essential for quiet vibration-free running. If necessary, shims should be inserted under the motor feet to prevent strain, or the whole rotor and transmission element should be balanced.

2.3 Balancing, transmission elements

A suitable device should always be used for fitting and removing the transmission elements (coupling halves, pulleys, pinions) (Fig. 7).

As standard, the rotors are dynamically balanced with the complete featherkey inserted.

From 1991 onwards, the type of balance has been marked on the drive end of the shaft (shaft end face):
(**F** = balanced with **full** featherkey)
(**H** = balanced with **half** featherkey)
When fitting the transmission element, keep the type of balance in mind!

Balance with half featherkey
Poor running characteristics can arise in the case of transmission elements having a length ratio of hub length l to length of shaft end $l_M < 0.8$ and running at speeds of > 1500 rev/min (see Fig. 8). If necessary, re-balancing should be carried out, e.g. the part of the featherkey T_p that protrudes from the transmission element and above the shaft surface should be cut back.

⚠ WARNING **The usual measures should be taken to guard transmission elements from touch. If a motor is started up without transmission element attached, the featherkey should be secured to prevent it being thrown out.**

2.4 Electrical connection

Check to see that system voltage and frequency agree with the data given on the rating plate. Voltage or frequency deviations of ±5% (*for 1MA5/1MF5, frequency deviations of ±3%)* from the rated values are permitted without the necessity of derating the output. Connection and arrangement of the terminal links must agree with the diagram provided in the terminal box. Connect the earthing conductor to the terminal with the ⏚ marking.

Wherever terminal clips are used (for example, to DIN 46282), arrange the conductors so the clips are virtually level, i.e. not tilted when tightened. This method of connection means that the ends of single conductors must be bent in the shape of a U or be fitted with a cable lug (see Fig. 3.1). This also applies to the green-yellow protective earthing conductor and the outer earthing conductor (see Fig. 3.2).

Please refer to Fig. 4 for tightening torques for terminal bolts and nuts (except for terminal strips).

2.5 Checking the insulation resistance

The insulation resistance of the windings must be measured prior to initial startup of the machine, after long periods of storage or standstill (approx. 6 months).

⚠ WARNING **While the measurement is being taken and immediately afterwards, some of the terminals carry dangerous voltages and must not be touched.**

Insulation resistance
- The **minimum insulation resistance** of new, cleaned or repaired windings with respect to ground is 10 MOhm.
- The critical **insulation resistance** R_{crit} is calculated first by multiplying the rated voltage U_N, e.g. 0.69 kV AC, with the constant factor (0.5 MOhm/kV): R_{crit} = 0.69 kV * 0.5 MOhm/kV = 0.345 MOhm.

Measurement
The **minimum insulation resistance** of the windings to ground is measured with 500 V DC. The winding temperature should then be 25°C ± 15 °C.
The **critical insulation resistance** should be measured with 500 V DC with the winding at operating temperature.

Checking
If the **minimum insulation resistance** of a new, cleaned or repaired machine, which has been stored or at standstill for a prolonged period of time, is less than 10 MOhm, this may be due to humidity. The windings must then be dried.

After long periods of operation, the **minimum insulation resistance** may drop to the **critical insulation resistance**. As long as the measured value does not fall below the calculated value of the **critical insulation resistance**, the machine may continue in operation. If it does, the machine must be stopped immediately.

The cause must be determined, and the windings or winding sections repaired, cleaned or dried as necessary.

2.6 Commissioning

NOTE: Where the torque is very uneven (the drive of a piston-type compressor, for example), the inevitable result is a non-sinusoidal motor current, whose harmonics can lead to excessive system perturbation or excessive electromagnetic interference.

In the case of converter-fed motors, high-frequency current or voltage harmonics in the motor cables can give rise to electromagnetic interference. That is why the use of shielded cables is recommended.

Before commissioning, check that:
- The minimum insulation resistances are adhered to
- The rotor turns freely without rubbing
- The motor is properly assembled and aligned
- The transmission elements are correctly adjusted (e.g. belt tension) and the transmission element is suitable for the given operating conditions
- All electrical connections, mounting screws and connecting elements are properly tightened and fitted
- All protective conductors are properly installed
- Any auxiliaries that may be fitted (brakes) are in working order
- Touch protection guards are installed around moving and live parts
- The maximum speed n_{max} (see rating plate) is not exceeded.
  NOTE: The maximum speed n_{max} is the highest operating speed permitted for short periods. It should be kept in mind that motor noise and vibration are worse at this speed, and bearing life is reduced.

⚠ CAUTION **After motor installation, the brake, if fitted, should be checked for proper functioning.**

It is not possible to formulate a complete check list. Other checks may also be necessary!

3 Maintenance

Safety precautions

⚠ WARNING **Before starting any work on the motor or other equipment, particularly before opening covers over live or moving parts, the motor must be properly isolated from the power supply. Besides the main circuits, any additional or auxiliary circuits that may be present must also be isolated.**
The usual "5 safety rules" (as set forth in DIN VDE 0105) are:
- Isolate the equipment
- Take effective measures to prevent reconnection
- Verify equipment is dead
- Earth and short-circuit
- Cover or fence off adjacent live parts

The precautions listed above should remain in force until all maintenance work is finished and the motor has been fully assembled.

NOTE: Where motors are fitted with closed condense water openings (e.g. degree of protection IP55 or IP56, see rating plate), these should be opened from time to time to allow any accumulated condense water to drain away.
Condense water openings should always be at the lowest point of the motor!

Fitting new bearings, type of grease

Under normal operating conditions, with horizontally mounted motors and coolant temperatures of up to 40 °C, the bearings should be changed at intervals of:
- approx. 20,000 operating hours for speeds of 1500 rev/min
- approx. 10,000 operating hours for speeds of 3000 rev/min

Irrespective of the number of operating hours, the grease should be renewed every 3 years because of ageing.

In the case of motors operating under special conditions, such as vertical motor position, frequent operation at maximum speed n_{max}, heavy vibration, sudden load changes and frequent reversing operation, the bearing should be changed at considerably more frequent intervals than at the operating hours stated above.

The motors feature deep-groove ball bearings which are provided with a cover plate (ZC3 version).

The cover plate is arranged on that side of the bearing facing the frame (stator).

NOTE: Notice the cover plate arrangement when changing the bearings, because it can vary between standard and special motors!

The cover plate material should withstand temperatures from -20 °C to +150 °C, e.g. polyacryl-rubber (ACM).

Type of grease for standard machines: UNIREX N3 (Esso); synthetic greases must conform to DIN 51825-K3N.

Special greases should be indicated on the rating plate.

Avoid mixing different types of grease!

Dismantle the motor to the extent necessary. Pull off the bearing with a suitable device (see Fig. 6). Clean the journal! Clean the bearing, or obtain a new one, and pack it with fresh grease.

Pack the bearing cavities flush with grease! The cover plate or endshield is kept free of grease to prevent overgreasing.
Heat bearings evenly to about 80-100 °C and press on. Heavy blows (such as with a hammer, ...) should be avoided.

Any worn sealing elements (such as shaft sealing ring, etc.) should also be renewed.

If springless radial shaft sealing rings are used, the replacement sealing rings must also be of the springless type.

Regreasing device

In the case of motors with regreasing device, take note of the information given on the rating plate!

Joint sealing

When reassembling machines with degree of protection IP55 or higher (see rating plate), the bright surfaces of the joint between the motor frame and the endshields should be coated with a suitable non-hardening sealing compound, such as Fluid-D.

Plastic fan (frame sizes 180M ... 200L)

Plastic fans have two cast-on tabs that snap into the ring groove on the shaft to prevent axial movement. Before the fan is pulled off the shaft, these two tabs must be disengaged and held temporarily in that position, e.g. by inserting packing. In the disc at the root of the blades, there are two openings for the claws of an extractor whose central screw should press against the hub. On delivery, these openings may be covered by a film of plastic.
A suitable device should be used for pulling the fan off and pressing it back on. Hammer blows must be avoided.

4 EEx e motors 1MA5, 1MF5

DIN EN 50014/VDE 0170/0171 Part 1 and
DIN EN 50019/VDE 0170/0171 Part 6

The special information in italics applies to these motor versions!
**1MA5 motors mounted with the shaft extension pointing upwards, e.g. types of construction IM V 3, IM V 6, IM V 19 (see Fig. 1), must be fitted with a cover to prevent foreign particles from dropping into the fan cowl of the motor (see DIN EN 50014/VDE 0170/0171 Part I. Section III, 16.1). This cover must not impair effective motor ventilation by the shaft-mounted fan.*
The temperature class of the motor indicated on the rating plate must correspond to the temperature class of any combustible gas that is likely to occur. Each motor must be provided with a circuit-breaker which is set to the rated current of that motor and which, under locked-rotor conditions, trips within the t_E time stated on the motor rating plate (compare with the tripping characteristic supplied with the circuit-breaker). In the case of delta-connected motors, overload protection (including phase-failure protection) should be provided. Pole-changing motors require a separate circuit-breaker for each speed.
If, however, overload protection is to be provided only in the form of direct temperature monitoring based on temperature sensors (see DIN EN 50019/VDE 0170/0171 Part 6, Appendix A-A1.b), the motor design must be specially tested and certified for this.
See DIN 57165/VDE 0165.
Repairs must be carried out in Siemens workshops or inspected by an officially approved specialist.

FRANÇAIS

Remarque générale

ATTENTION Afin d'assurer la **protection des personnes** et d'éviter tout **dégât** matériel, il est impératif de respecter les indications contenues dans toutes les instructions de service et dans tous les autres éléments de documentation transmis avec le produit.
Les instructions jointes (sur papier jaune) contiennent des règles de sécurité applicables aux matériels électriques. Ces informations relatives à la sécurité doivent être utilisées en complément de l'ensemble de la documentation.

Toutes les **prescriptions** et **exigences nationales**, **locales** ou **spécifiques** à l'installation doivent être respectées.

Les machines de **réalisation spéciale** (version, forme de construction) peuvent différer quant aux détails techniques. En cas de doute à ce sujet, il est instamment recommandé de contacter l'agence Siemens compétente en indiquant la **désignation de type** et le **numéro de fabrication**, ou de recourir aux centres de S.A.V. Siemens pour effectuer les travaux de maintenance.

NOTA Fig. 2 ...(Pièces de rechange) voir appendice pages 16

1 Description

1.1 Domaine d'application

Les moteurs peuvent être installés en atmosphère poussiéreuse et humide. L'isolation est tropicalisée. Normalement, aucune mesure de protection particulière contre les intempéries n'est nécessaire si l'on entrepose correctement les moteurs ou si on les monte à l'extérieur selon les règles de l'art.

Niveau de pression acoustique à 50 Hz (DIN EN 21 680, fasc. 1)
1 LA5, *1MA5* env. 51 à 76 dB(A)

1.2 Constitution et mode de fonctionnement

Les moteurs 1LA5 et 1LA9, 1LB5, 1LC5 et *1MA5* sont autorefroidis (ventilateur). Les moteurs 1PP5 et 1PP9 sont autorefroidis par ventilateur monté sur l'arbre ou ventilés par un motoventilateur rapporté. Les moteurs 1LP5, 1LP9 et *1MF5* sont à refroidissement naturel (pas de ventilateur).

Les pattes des moteurs de désignation de carcasse 100L et 112M viennent de coulée. Les pattes des moteurs 132S à 200L sont vissées à la carcasse (voir Fig. 2).

Seules les pattes des moteurs de désignation de carcasse 132S à 200L peuvent donc être déplacées, par exemple pour modifier la position de la boîte à bornes (voir Fig. 5). Sur les moteurs 180M à 200L, il faut tarauder les trous existants dans la carcasse. Il faut ensuite rétablir la coplanéité des surfaces d'appui des pattes par usinage et en utilisant au besoin des cales.
Pour les moteurs 1LC5, il convient d'observer en plus les instructions de service du frein.

2 Fonctionnement

ATTENTION **Avant toute intervention sur la machine, vérifier qu'elle est bien hors tension.**

2.1 Transport, manutention et stockage

Pour la manutention, utiliser tous les **oeillets de levage** disponibles sur le moteur.

ATTENTION **Les groupes de machines (par ex. motoréducteurs, motocompresseurs, etc.) ne doivent être manutentionnés que par les oeillets ou chevilles d'élingage prévus à cet effet. Ils ne doivent pas être levés par les machines individuelles. La charge limite du dispositif de levage doit être respectée.**

Dans des conditions d'entreposage favorables (dans des locaux secs, à l'abri de poussières et de trépidations), regraisser ou remplacer les **roulements à billes** s'il s'est écoulé plus de 4 ans entre la livraison et la mise en service du moteur. Dans des conditions défavorables, cette période sera plus courte en conséquence.

Ler cas échéant, contrôler la résistance d'isolement des enroulements (voir chap. 2.5).

2.2 Installation

Après l'installation, serrer ou enlever les **oeillets de levage vissés**.

Sur les **moteurs à bout d'arbre vers le haut ou vers le bas** (p.ex. IMV5, IMV6, voir Fig. 1), prendre les dispositions pour protéger le palier supérieur contre la pénétration d'eau.

La **partie supérieure des boîtes à bornes** avec plaques de bornes à six bornes peut être tournée de 4 x 90°; la partie supérieure des boîtes à bornes avec plaques de bornes à 9 bornes peut être tournée de 180°.

Comportement vibratoire
La stabilité des fondations et des supports de montage, la précision de l'alignement des machines et l'équilibrage soigné des organes de transmission sont les conditions d'un bon comportement vibratoire. C'est ainsi qu'il faudra par exemple interposer sous les pattes des cales en tôle pour empêcher le gauchissement du moteur ou procéder à l'équilibrage du rotor complet avec les éléments de transmission.

2.3 Equilibrage, organes de transmission

L'emmanchement et l'extraction des organes de transmission (demi-accouplements, poulies, roues demtées,...) devront se faire avec les dispositifs appropriés (Fig. 7).

Les moteurs en version standard ont fait l'objet d'un équilibrage dynamique avec clavette entière.

Sur les moteurs fabriqués à partir de 1991, le type d'équilibrage est indiqué par un marquage en bout d'arbre côté D:
(**F =** équilibrage avec clavette **entière**)
(**H =** équilibrage avec **demi-clavette** - version spéciale)
Lors du montage de l'organe de transmission, veiller à ce que le type d'équilibrage de ce dernier corresponde à celui du rotor.

Equilibrage avec demi-clavette
Pour les organes de transmission dont le rapport de la longueur de moyeu à la longueur l_M du bout d'arbre est < 0,8 et pour des vitesses > 1500 tr/min, il peut se produire des balourds (voir Fig. 8).
Effectuer le cas échéant un rééquilibrage après avoir par exemple éliminé l'excédent de matière T_P de la clavette qui fait saillie par rapport au moyeu et à l'arbre.

⚠ ATTENTION **Prendre les mesures habituelles de protection des personnes contre l'accès aux parties en mouvement au niveau des organes de transmission. Lorsqu'un moteur est mis en marche sans organes de transmission, prendre les mesures nécessaires afin d'empêcher que la clavette ne soit projetée hors de l'arbre par force centrifuge.**

2.4 Raccordement électrique

Comparer la tension et la fréquence du réseau aux indications de la plaque signalétique. Une variation de ±5 % de la tension ou de la fréquence (pour *1MA5/1MF5 de ±3 %* de la fréquence) est admissible sans déclassement en puissance. Réaliser le branchement et disposer les barrettes de couplage conformément au schéma situé dans la boîte à bornes. Raccorder le conducteur de protection à la borne ⏚ .

Les conducteurs raccordés à des bornes à étrier doivent être disposés de telle sorte que l'étrier repose à la même hauteur de part et d'autre de la vis. Lorsqu'un seul conducteur est raccordé, il doit être plié en U autour de la vis ou être muni d'une cosse (voir Fig. 3.1). Il en est de même du conducteur de protection et le conducteur de terre externe vert jaune (voir Fig. 3.2).

Couples de serrage des vis et écrous des bornes de la plaque à bornes (ne concerne pas les borniers), bvoir Fig. 4.

2.5 Contrôle de la résistance d'isolement

Avant la première mise en service de la machine, après un entreposage de longue durée ou encore une interruption de service prolongée (env. 6 mois), la résistance d'isolement des enroulements doit être mesurée.

⚠ ATTENTION **Durant la mesure et immédiatement après, les bornes sont portées en partie à une tension dangereuse et ne doivent pas être touchées**.

Résistance d'isolement

- La **résistance minimale d'isolement** mesurée par rapport à la masse est de 10 Mégohms pour les enroulements neufs, nettoyés ou remis en état.
- La **résistance critique d'isolement R_{krit}** se calcule en multipliant la tension assignée U_N, p.ex. 0,69 kV CA, par la constante 0,5Mégohms/kV :

  R_{krit} = 0,69 kV * 0,5 Mégohms/kV = 0,345 Mégohms

Mesure

La **résistance minimale d'isolement** des enroulements par rapport à la masse est mesurée avec une tension d'essai continue de 500 V.

La température des enroulements en cours d'essai doit être de 25 ± 15°C.

La **résistance critique d'isolement** doit être mesurée avec une tension d'essai continue de 500 V lorsque les enroulements ont atteint leur température en service.

Contrôle

La **résistance minimale d'isolement** par rapport à la masse mesurée sur les enroulements de machines ayant été entreposées pendant une période prolongée, ou encore sur des enroulements neufs, nettoyés ou remis en état peut être inférieure à 10 Mégohms en raison de l'humidité régnant au niveau des enroulements. Dans ce cas, sécher les enroulements.

Après un service prolongé, la valeur de la **résistance minimale d'isolement** peut se rapprocher de la valeur de la **résistance critique d'isolement**. Tant qu'elle ne tombe pas en-dessous de cette dernière, la machine peut rester en fonctionnement. Dans le cas contraire, la machine doit être arrêtée immédiatement.

Il faudra alors en déterminer la cause, et éventuellement remettre en état, nettoyer ou sécher les enroulements en totalité ou en partie.

2.6 Mise en service

NOTA : Un **couple très irrégulier** (par ex. lors de l'entraînement d'un compresseur à piston) donne lieu à un courant moteur non sinusoïdal dont les harmoniques sont susceptibles de polluer exagérément le réseau d'alimentation ou d'émettre des perturbations électromagnétiques.

Lors de **l'alimentation par convertisseurs statiques**, les câbles vers le moteur peuvent être le siège d'harmoniques de courant et de tension à haute fréquence qui sont la source d'émissions de perturbations électromagnétiques. Ceci oblige à utiliser des câbles d'alimentation blindés.

Avant mise en service, vérifier les points suivants :

- la résistance d'isolement minimale est respectée,
- le rotor peut être tourné sans qu'il frotte,
- le moteur est monté et aligné correctement,
- les organes de transmission sont correctement réglés (par ex. tension de courroie) et bien choisis pour l'emploi,
- les connexions électriques sont réalisées conformément aux prescriptions, et les vis des bornes sont serrées aux couples prescrits,
- le conducteur de protection est bien raccordé,
- les dispositifs additonnels éventuels (frein, ...) sont opérationnels,
- les mesures de protection des personnes contre l'accès aux parties actives (sous tension) ou en mouvement ont été prises,
- la vitesse limite n_{max} (lorsqu'elle est indiquée, voir plaque signalétique) ne doit pas être dépassée.

  NOTA : la vitesse limite n_{max} est la vitesse de service maximale temporaire. A cette vitesse, on observe une dégradation du comportement sonore et vibratoire ainsi qu'un raccourcissement de la période de renouvellement des roulements.

⚠ ATTENTION **Après montage de la machine, s'assurer que le frein (si présent) est en bon état de fonctionnement.**

La présente énumération ne peut être exhaustive. Des contrôles supplémentaires peuvent s'avérer nécessaires.

3 Maintenance

Dispositions générales concernant la sécurité

⚠ ATTENTION **Avant toute intervention sur le moteur, notamment avant d'ouvrir ou d'enlever les recouvrements des parties actives, il est indispensable de mettre le moteur hors tension conformément aux règlements de sécurité. En plus des circuits principaux, ne pas oublier les éventuels circuits auxiliaires et additionnels.**

Les "5 règles de sécurité" (par exemple selon DIN VDE 0105) sont applicables :

- mettre hors tension
- condamner les appareils (contre le réenclenchement)
- vérifier l'absence de tension
- mettre à la terre et court-circuiter
- recouvrir les parties actives voisines ou en barrer l'accès.

Ces mesures de sécurité ne doivent être supprimées qu'à l'issue de l'intervention de maintenance et lorsque tous les éléments du moteur sont remontés.

NOTA : Dans la mesure où le moteur doit fonctionner avec purgeurs de condensat fermés (par ex. en degré de protection IP55 ou IP56), il faut ouvrir de temps en temps les purgeurs pour évacuer l'eau condensée qui s'est accumulée.

Les purgeurs de condensats sont toujours à installer au point le plus bas du moteur.

Remplacement des roulements, graissage

Dans des conditions de service normales, avec moteur à axe horizontal et température d'air de refroidissement jusqu'à 40 °C, la périodicité de remplacement des roulements est d'environ

- 20 000 heures de service à 1500 tr/min,
- 10 000 heures de service 3000 tr/min.

Pour des raisons de vieillissement, la graisse devrait être renouvelée tous les 3 ans, indépendamment du nombre d'heures de service.

Dans les conditions d'utilisation particulières, par ex. axe vertical, fonctionnement fréquent à la vitesse limite n_{max}, grandes sollicitations par des vibrations et chocs, inversion fréquent du sens de marche, etc., la périodicité de remplacement des roulements devra être choisie plus courte.

Les moteurs sont équipés de roulements à billes à 1 déflecteur (version ZC3). Le déflecteur est disposé du côté carcasse (stator).

NOTA : lors du remplacement des roulements, veiller à l'orientation du déflecteur, vu que sur les exécutiuons spéciales la disposition peut différer de celle des exécutions standard.

Les déflecteurs seront en matière résistant aux températures entre -20 °C et +150 °C, par ex. caoutchouc de polyacryle (ACM).

Type de graisse (moteurs standards) : UNIREX N3 (Esso) ; les graisses de rechange doivent correspondre à DIN 51825-K3N.
Lews graisses spéciales sont spécifiées sur la plaque signalétique.

Eviter de mélanger différentes sortes de graisses.

Démonter le moteur dans la mesure du nécessaire. L'extraction des roulements doit être réalisée avec un dispositif approprié (voir Fig. 6). Nettoyer les portées de paliers ! Nettoyer les roulements ou les remplacer et le regraisser.

Remplir à ras de graisse les espaces libres des roulements ! Ne pas mettre de graisse dans les couvercles de paliers ni dans les flasques-paliers pour éviter un excédent de graisse.
Porter progressivement les roulements à une température d'environ 80 à 100 °C et les emmancher sur l'arbre. Eviter les coups secs (par ex.: coups de marteau).

Remplacer également tous les éléments d'étanchéité soumis à usure (par exemple bagues d'étanchéité).
Les bagues d'étanchéité à frottement radial sans ressort seront remplacées par des bagues de même type (sans ressort).

Dispositif de graissage
Pour les moteurs avec graisseurs, respecter les indications figurant sur la plaque signalétique.

Etanchéité des jointures
Lors du réassemblage des moteurs avec un degré de protection IP 55 ou supérieur (voir plaque signalétique), les jointures en métal nu entre la carcasse et les flasques-paliers doivent être étanchées avec un produit pâteux ne durcissant pas, p. ex. Fluid-D.

Ventilateurs en matière plastique (dés. carcasse 180M à 200L)
Les ventilateurs en matière plastique comportent de moulage deux languettes qui s'engagent dans la gorge de l'arbre à titre d'immobilisation en translation. Avant d'extraire le ventilateur, il faut dégager les deux languettes et les maintenir provisoirement dans cette position par des cales. Les ventilateurs comportent dans le disque raidisseur deux trous pour le passage de l'arrache-moyeu. A la livraison, ces trous peuvent être obstrués par un mince voile.
L'extraction et l'emmanchement du ventilateur doivent être réalisés avec un dispositif approprié. Ne pas donner de coups de marteau.

4 Moteurs EEx e 1MA5, 1MF5 selon

DIN EN 50014/VDE 0170/0171 fascicule 1 et
DIN EN 50019/VDE 0170/0171 fascicule 6

Les parties de texte en itallique s'appliquent en complément ou spécialement aux moteurs EEx e 1MA5, 1MF5.

**Les moteurs 1MA5 dont le bout d'arbre est orienté vers le haut (par ex. formes IM V 3, IM V 6, IM V 19 ; voir Fig. 1) doivent étre équipés d'un recouvrement empêchant les corps étrangers de tomber dans le capot du ventilateur (cf. DIN EN 50014/VDE 0170/0171, fascicule 1, III, 16.1). Ce recouvrement ne doit pas entraver le refroidissement du moteur par son ventilateur.*
La classe de température figurant sur la plaque signalétique du moteur doit coïncider avec celle du gaz combustible susceptible de se présenter. Chaque moteur sera protégé par un disjoncteur moteur, que l'on réglera sur le courant assigné du moteur et qui déclenchera, si le rotor est calé, en l'espace de temps t_E figurant sur la plaque signalétique du moteur (essai sur le vu de la caractéristique de déclenchement jointe au disjoncteur moteur). Dans le cas du couplage en traingle, il faudra prévoir une protection contre les surcharges sensible aux coupures de phase. Les moteurs à polarités multiples comporteront un disjoncteur pour chaque nombre de pôles.

Mais si l'on veut assurer la protection contre les surcharges exclusivement par un équipement de surveillance directe de la température à l'aide de sondes thermométriques (voir DIN EN 50019/VDE 0170/0171 fascicule 6, annexe A-A1.b), il faut que la version du moteur soit spécialement contrôlée et agréée à cet effet.

Se reporter également à la norme DIN 57165/VDE 0165.
Les réparations devront être confiées à un atelier Siemens ou être attestées par un expert agréé.

Indicaciones generales

PRECAUCION

Para evitar **peligros** y **daños**, es imprescindible observar siempre los datos y las indicaciones que figuran en todas las instrucciones de servicio y en las demás suministradas. Estas instrucciones de servicio llevan adjuntas otras (de color amarillo), que contienen datos suplementarios sobre la seguridad de las máquinas eléctricas. Son por tanto un complemento de las demás instrucciones generales y de servicio suministradas.
Además rigen las **condiciones y prescripciones vigentes nacionales, locales y específicas de la instalación**.
Pueden diferir los detalles técnicos de las **ejecuciones especiales** y **variantes**. En caso de dudas, es perentorio dirigirse al fabricante indicando la **designación de tipo y el número de serie**, o dejar que un centro de service de SIEMENS efectúe los trabajos de conservación.

INDICACION: Figs. 2 ... (Piezas de recambio), v. Anexo págs. 16

1 Descripción

1.1 Campo de aplicación

Los motores pueden instalarse en ambientes húmedos o polvorientos. El aislamiento es resistente al clima tropical. Normalmente no es preciso adoptar medidas de protección especiales contra los efectos climatológicos, si los motores se almacenan o se depositan a la intemperie convenientemente.

Nivel de intensidad acústica en la superficie, a 50 Hz
(DIN EN 21 680, parte 1)
1 LA5, *1MA5* aprox. 51 a 76 dB(A)

1.2 Funcionamiento y constitución

Los motores 1LA5, 1LA9, 1LB5, 1LC5 y *1MA5* tienen autorrefrigeración (con ventiladores). Los motores 1PP5 y 1PP9 tienen refrigeración propia bien sea, p. ej., cuando se emplean para impulsar ventiladores, por disponer de un ventilador especial montado en el extremo del eje, o por tener ventiladores independientes. Los motores 1LP5, 1LP9 y *1MF5* tienen autorrefrigeración (sin ventiladores).

Los motores con patas de los tamaños 100L y 112M las tienen fundidas con la carcasa y los de los tamaños 132S a 200L las llevan atornilladas (v. Fig. 2).
El cambio de las patas en la carcasa, p. ej. para modificar la posición de la caja de bornes, solo es posible en los tamaños 132S a 200L. En el modelo BG180M...200L se habrá de roscar con macho los taladros en la carcasa del motor para poder sujetar las patas, teniendo que repasar seguidamente las superficies de apoyo de las mismas para situarlas en un plano y aplicar suplementos si fuera preciso.

En los motores 1LC5 hay que observar adicionalmente las instrucciones de servicio del freno.

2 Operación

PRECAUCION **En los motores solo se trabajará cuando no estén bajo tensión.**

2.1 Transporte, almacenamiento

Durante el transporte se utilizarán todas las anillas de suspensión disponibles.

PRECAUCION **Para transportar grupos de máquinas (p. ej., reductores, ventiladores adosados, ...) utilizar únicamente las anillas o muñones de suspensión previstos. Los grupos de máquinas no deben elevarse colgados de las máquinas individuales. Comprobar la capacidad de carga de estas anillas.**

Los **rodamientos** se volverán a engrasar o se renovarán si han transcurrido más de 4 años bajo condiciones favorables desde el suministro hasta la puesta en servicio (conservación en locales secos, exentos de polvo y de trepidaciones). Si las condiciones son desfavorables, este período se acorta considerablemente.

En caso dado se comprobará la resistencia de aislamiento, v. apartado 2.5.

2.2 Emplazamiento

Las **anillas atornilladas** se apretarán o retirarán después de la instalación.

En las **máquinas de eje vertical** (p. ej., IMV5, IMV6 - v. Fig. 1), hay que garantizar que no pueda entrar agua en el rodamiento superior.

La **parte superior de la caja de bornes** con placa de 6 bornes se puede girar en 4 x 90 grados y con placa de 9 bornes en 180 grados.

Estabilidad de marcha

Son condiciones previas para lograr una marcha estable, con vibraciones reducidas, que la conformación de los cimientos o las condiciones de adosado/empotrado sean estables, junto con una alineación exacta de los motores y un buen equilibrado de los elementos de accionamiento. Por ejemplo, se pueden colocar chapas delgadas debajo de las patas para evitar las torsiones en los motores o, en caso dado, puede que sea necesario un equilibrado completo del rotor junto con el elemento de accionamiento.

2.3 Equilibrado, elementos de accionamiento

Se han de calar y extraer los elementos de accionamiento (acoplamientos, poleas de transmisión, ruedas dentadas, ...)con un dispositivo adecuado (Fig. 7).

Los rotores están equilibrados dinámicamente con chaveta entera de manera estándar.

A partir de las series de 1991, el tipo de equilibrado se marcará en el LA del extremo del eje:

(**F** = equilibrado con chaveta entera)

(**H** = equilibrado con media chaveta - ejecución especial)

Al montar el elemento de accionamiento observar que sea adecuado el tipo de equilibrado.

Equilibrado con media chaveta

En los elementos de accionamiento con una relación de la longitud de cuba l a la longitud del extremo del eje l_M < 0,8 y velocidades > 1500/min, pueden aparecer irregularidades en la estabilidad de marcha (v. Fig. 8). En caso dado será necesario un reequilibrado, p. ej., mecanizar la parte de la chaveta T_p que sobresale del elemento de accionamiento y del contorno del eje.

Se observarán las medidas generales necesarias para la protección contra contactos involuntarios de los elementos de accionamiento.
Si se opera un motor sin elemento de accionamiento, habrá que asegurar la chaveta contra su eyección.

2.4 Conexión

La tensión y frecuencia de la red tienen que ser las indicadas en la placa de características. Son admisibles desviaciones de tensión o de frecuencia de ±5 % como máximo (para *1MA5/1MF5*, *desviaciones máximas de frecuencia de ±3 %*), sin que por ello disminuya la potencia. Llevar a cabo el empalme y la colocación de los estribos de maniobra según el esquema que se encuentra en la caja de bornes. Empalmar el conductor de protección al borne marcado con ⏚ .

En los bornes con estribo (p. ej. según DIN 46282) los conductores se distribuirán de tal manera que resulte aprox. la misma altura de conexión en ambos lados. Este tipo de conexión requiere doblar en U uno de los conductores, o usar un terminal (v. Fig. 3.1). Esto rige igualmente para la conexión del conductor de protección y para el conductor de puesta a tierra exterior, de color amarillo y verde (v. Fig. 3.2).

Los terminales eléctricos roscados y los bornes de conexión (exceptuando los de las regletas) estén apretados con el par prescrito; véase la fig. 4.

2.5 Control de la resistencia del aislamiento

Antes de la primera puesta en marcha, tras largos períodos de almacenamiento o de parada (aprox. 6 meses) hay que medir la resistencia del aislamiento de los arrollamientos.

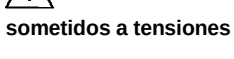

Durante la medición y seguidamente después de ella, los bornes a veces están sometidos a tensiones peligrosas, por lo que no deben tocarse.

Resistencia del aislamiento

- La **resistencia mínima del aislamiento** contra masa de un arrollamiento nuevo, limpio o reparado es de 10 Megaohmios.
- En primer lugar se calcula la **resistencia del aislamiento crítica** $R_{crít.}$ Dicho cálculo se efectúa multiplicando la tensión asignada U_N, p. ej. 0,69 kV AC por el factor constante (0,5 Megaohmios/kV):
  $R_{crít}$ = 0,69 kV * 0,5 Megaohmios/kV = 0,345 Megaohmios.

Medición

La **resistencia mínima del aislamiento** contra masa de los arrollamientos se mide con 500 V c.c. Al hacerlo, la temperatura de los arrollamientos será de 25°C ± 15°C.
La **resistencia crítica del aislamiento** a la temperatura de servicio del arrollamiento se mide con 500 V c.c.

Control

Si en una máquina nueva, limpia o tras un largo período de almacenamiento o de paro la **resistencia del aislamiento mínima** contra masa del arrollamiento fuese menor de 10 Megaohmios podría haber un exceso de humedad. En este caso se secarán los arrollamientos.
Tras un largo período de funcionamiento la **resistencia mínima** del aislamiento puede bajar a la **resistencia crítica**. Mientras el valor medido no sea menor que el calculado para la **resistencia crítica** la máquina podrá seguir funcionando. Si se alcanzara un valor menor habría que parar inmediatamente la máquina.
Hay que averiguar cuál es el motivo y en su caso reparar los arrollamientos o sus partes, limpiarlos o secarlos.

2.6 Puesta en servicio

INDICACION: Cuando el **par es muy irregular** (p. ej., accionamiento de un compresor de émbolo) se fuerza la formación de una corriente distorsionada, cuyas oscilaciones armónicas pueden influenciar indebidamente a la red así como también emitir perturbaciones electromagnéticas inadmisiblemente altas.

Si la **alimentación es a través de un convertidor**, las oscilaciones armónicas de tensión y corriente de alta frecuencia en las líneas de alimentación pueden emitir perturbaciones electromagnéticas. Por esta razón se recomienda el uso de conductores blindados.

Antes de la puesta en servicio se comprobará si

- se han observado las resistencias mínimas del aislamiento
- el rotor puede girarse sin que roce
- si el motor está alineado y montado correctamente
- los elementos de accionamiento están ajustados correctamente (p. ej., la tensión de la correa en caso de accionamiento por correa, ...) y que el elemento de accionamiento es el adecuado para la aplicación prevista
- todas las conexiones eléctricas, así como los tornillos y elementos de unión están apretados y ejecutados según las disposiciones
- que el conductor de protección se ha fabricado de acuerdo a las prescripciones
- que todos los dispositivos adicionales (frenos, ...) están en condiciones de prestar servicio
- que se han tomado las medidas necesarias contra contactos involuntarios de piezas en movimiento y bajo tensión
- que no se sobrepasa la velocidad límite $n_{máx}$ (v. placa de características).
  INDICACION. La velocidad límite $n_{máx}$ es la velocidad de servicio máxima admisible durante cortos períodos. Hay que tener en cuenta que en este caso el comportamiento empeora respecto al ruido y a las vibraciones del motor y que se acorta el período para el cambio de los rodamientos.

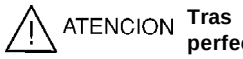

Tras montar los motores se comprobará el perfecto funcionamiento de los frenos (si existen).

Esta lista no es completa. Posiblemente sean necesarias pruebas adicionales.

3 Mantenimiento

Medidas de seguridad

PRECAUCION **Antes de comenzar cualquier trabajo en el motor o en el aparato y, especialmente, antes de abrir las cubiertas de las partes activas, debe desconectarse según las prescripciones. Tener en cuenta los circuitos adicionales o auxiliares que pudieran haber junto con los circuitos principales.**

Las usuales "5 reglas de seguridad" según, p. ej., DIN VDE 0105 son:

- Desconectar
- Asegurar contra la reconexión
- Comprobar si está libre de tensión
- Poner a tierra y cortocircuitar
- Cubrir o delimitar las partes contiguas que estén bajo tensión.

Solo podrán retirarse estas medidas cuando se hayan acabado los trabajos de mantenimiento y el motor se haya montado completamente

INDICACION: Deberán abrirse de cuando en cuando los taladros para el agua de condensación en los motores en los que dichos agujeros estén tapados (p. ej., grado de protección IP55 ó IP56, v. placa de características), para permitir la salida del agua que pudiera haberse acumulado.

Las aberturas para el agua de condensación siempre deberán situarse en la parte más baja del motor.

Cambio de rodamientos, tipo de grasa

El plazo para el cambio de los rodamientos bajo condiciones normales de servicio, montaje horizontal del motor, temperatura del medio refrigerante de hasta 40°C y con velocidades del motor de

- 1500/min, es aprox. 20.000 horas de servicio
- 3000/min, es aprox. 10.000 horas de servicio.

Independientemente de las horas de servicio, se recomienda renovar la grasa aprox. cada 3 años debido a su envejecimiento.

Bajo condiciones de servicio especiales, p. ej., montaje vertical, servicio frecuente a velocidades límite $n_{máx}$, con grandes cargas por vibraciones y choques, así como con muchos servicios con inversión de marcha, se reducen considerablemente las horas de servicio indicadas.

Los motores tienen rodamientos radiales rígidos con un disco de cierre (ejecución ZC3).
El disco de cierre está colocado en el lado del rodamiento dirigido hacia la carcasa del motor (estator).

INDICACION: Al cambiar los rodamientos observar la disposición del disco de cierre ya que las ejecuciones especiales pueden variar de las estándar.

Estos discos deberán resistir temperaturas desde -20°C hasta +150°C, p. ej., ser de caucho poliacrílico (ACM).

Tipo de grasa en las máquinas estándar: UNIREX N3 (marca ESSO); las grasas alternativas deben satisfacer DIN 51825-K3N.
Las grasas especiales se indican en la placa de características.

Evítese la mezcla de grasas.

Despiezar el motor tanto como sea necesario. Extraer el rodamiento con el dispositivo adecuado (v. Fig. 6). Limpiar de impurezas al alojamiento. Limpiar o renovar los rodamientos y volverlos a engrasar.

Llenar a ras los recintos huecos del rodamiento. No se llena de grasa la tapa o el escudo portacojinetes, para evitar un engrase excesivo.
Calentar uniformemente los rodamientos a aprox. 80-100°C y calarlos. Evitar golpes fuertes (p. ej., con un martillo, ...).

También se renovarán los elementos de junta deteriorados (p. ej., los anillos de cierre radial de eje etc.).
Si los anillos de cierre radial del eje no tuvieran muelles, tampoco se pondrán muelles en los nuevos.

Dispositivo de reengrase
En los motores con dispositivo de reengrase, se observarán las indicaciones en la placa de características.

Sellado de juntas
Al montar máquinas con grado de protección IP55 o más (v. placa de características), las superficies pulidas entre la carcasa del motor y los escudos portacojinetes deberán hermetizarse con una pasta obturadora que no se endurece, p. ej., Fluid D.

Ventiladores de material plástico (BG180M ... 200L)
Cada ventilador de plástico tiene dos lengüetas moldeadas que encajan como fijación axial en la ranura anular del eje. Antes de extraer el ventilador, desencajar estas dos lengüetas y fijarlas provisionalmente en esta posición, p. ej., por medio de piezas insertadas. Los ventiladores tienen en el disco portador dos aberturas para poder pasar el dispositivo de extracción y actuar sobre el cubo. Puede que en estado de suministro las aberturas aún estén cubiertas de una fina hoja de plástico.
Tanto para calar como para extraer se utilizará siempre el dispositivo adecuado. Son absolutamente inadmisibles los martillazos.

4 Motores EEx e 1MA5, 1MF5

DIN EN 50 014/VDE 0170/0171 parte 1 y
DIN EN 50 019/VDE 0170/0171 parte 6

Para estos motores rigen las informaciones en letra cursiva, de forma complementaria o especial.
**En caso de motores en los que el extremo del eje queda hacia arriba, por ejemplo, en las formas constructivas IM V 3, IM V 6, IM V 19 (v. Fig. 1), habrá que disponer una cubierta para evitar que puedan penetrar cuerpos extraños por la tapa del ventilador (v. DIN EN 50014/VDE 0170/0171, parte 1, apartado III, 16.1). Esta cubierta no debe impedir la refrigeración del motor por el ventilador.*
La clase de temperatura indicada en la placa de características del motor ha de coincidir con la de los gases combustibles que pudieran desprenderse. Cada motor ha de tener un guardamotor ajustado a la intensidad nominal de la máquina, que dispare en el tiempo t_E indicado en la placa del motor, cuando esté bloqueado el rotor (prueba a la vista de la característica de disparo que acompaña al guardamotor). Como protección contra sobrecargas en las conexiones en delta se preverá un monitor de fase. Los motores de polos conmutables necesitan un guardamotor apropiado para cada número de pares de polos.
Si la protección contra sobrecargas se estableciese exclusivamente mediante un dispositivo de vigilancia de temperatura con sensores térmicos (véase DIN EN 50019/VDE 0170/0171, parte 6, anexo A-A1.b), habrá que comprobar el motor especialmente para este fin y extender el oportuno certificado.
Hacemos referencia a DIN 57165/VDE 0165.
Las reparaciones han de efectuarse en los talleres de Siemens o someterlas a la comprobación de un perito oficialmente reconocido.

ITALIANO

Avvertenze generiche

PERICOLO Per evitare **rischi e danni** è indispensabile attenersi alle avvertenze ed alle indicazioni contenute nella presente pubblicazione e nelle istruzioni supplementari in allegato (in giallo), relative alla sicurezza nell'impiego di macchine ed apparecchi elettrici, come pure quelle contenute in altri stampati attinenti.

Vanno inoltre rispettate le **norme ed esigenze nazionali, locali e specifiche** dell'impianto.

Esecuzioni speciali e varianti costruttive possono discostarsi in particolari tecnici. In caso di eventuali difficoltà, si prega di rivolgersi al costruttore, indicando il **tipo** e il **numero di matricola**, oppure di far eseguire i lavori di manutenzione da uno dei centri di service della Siemens.

Avvertenza: Fig. 2 ... (Parti di ricambio) , vedi appendice p. 16

1 Descrizione

1.1 Campo d'impiego

I motori possono essere installati in ambienti polverosi o umidi. L'isolamento è in versione tropicale. Se il deposito o l'installa- zione all'aperto sono eseguiti regolarmente, non è necessario in linea di massima alcun particolare accorgimento per proteggere i motori dalle intemperie.

Livello di pressione acustica delle superfici di misura a 50Hz
(DIN EN 21680 parte 1)
1LA5, *1MA5* ca. 51 a 76 dB(A)

1.2 Costruzione e modo di funzionamento

I motori 1LA5, 1LA9, 1LB5, 1LC5 e *1MA5* sono autoventilati (per mezzo di ventole). I motori 1PP5 e 1PP9 sono autoventilati, ad esempio se fungono da motori a ventilatori, da ventilatori speciali che vanno montati sui rotori, oppure per mezzo di ventilatori esterni. I motori 1LP5, 1LP9 e *1MF5* hanno ventilazione naturale (senza ventilatore).

Nei motori a piedini della grandezza 100L e 112M i piedini fanno corpo con la carcassa per fusione oppure, se si tratta dei motori della grandezza 132S...200L sono avvitati alla carcassa (ved. fig. 2). Per questa ragione un riposizionamento dei piedini sulla carcassa del motore, p. es. per variare la posizione della cassetta morsetti (ved. fig. 5), è possibile solo con i motori di grandezza 132S .... 200L. Se si tratta di motori a piedini del tipo 180M...200L, bisogna eseguire dei filetti utilizzando i fori sulla carcassa per il fissaggio dei piedini. In tale caso le superfici di supporto dei piedini devono essere di nuovo spianate e, se necessario, provviste di spessori.

Per i motori 1LC5 bisogna rispettare anche le istruzioni di servizio del freno.

2 Esercizio

PERICOLO **Si faccia attenzione che qualunque operazione sulla macchina venga effettuata solamente in assenza di tensione.**

2.1 Trasporto, deposito

Il sollevamento di motori con più **occhielli** deve avvenire utilizzandoli tutti.

PERICOLO **Per il trasporto di gruppi di macchina (ad es. azionamenti, soffianti supplementari) vanno utilizzati soltanto gli occhielli ed i perni previsti per il sollevamento. Il sollevamento di un gruppo di macchine non deve mai avvenire aggianciando la componente supplementare alla macchina principale.**
Assicurarsi che la capacità di portata degli apparecchi di sollevamento sia sufficiente.

E' consigliabile reingrassare i **cuscinetti** se fra la fornitura e la messa in servizio dei motori in condizioni favorevoli (magazzinaggio in ambienti asciutti, esenti da polvere e vibrazioni), è trascorso un periodo superiore a 4 anni. In condizioni non favorevoli la durata è notevolmente più breve.

Eventualmente va controllata la resistenza d'isolamento degli avvolgimenti, ved. sez. 2.5.

2.2 Installazione

Dopo l'installazione della macchina gli **occhielli di sollevamento avvitati** alla carcassa vanno serrati oppure tolti.

Nelle macchine con **estremità d'albero verso l'alto e verso il basso** (ad es. IMV5, IMV6, ved. fig. 1) si deve fare attenzione che non possa penetrare acqua nel cuscinetto superiore.

La **parte superiore della carcassa morsetti** può essere ruotata di 4x90 gradi, in caso di una morsettiera a 6 morsetti e di 180 gradi con una morsettiera a 9 morsetti.

Silenziosità di funzionamento
Per il funzionamento silenzioso ed equilibrato della macchina sono indispensabili dei fondamenti stabili e condizioni favorevoli all'installazione come anche la regolazione corretta del motore e l'equilibratura precisa dell'elemento di azionamento.
Per garantire ciò, può risultare necessario eseguire l'equilibratura completa con l'elemento di azionamento oppure stabilizzare la macchina con spessori di lamiera sottili posti sotto i piedini per provvedere ad eventuali distorsioni.

2.3 Equilibratura, elementi di azionamento

Le operazioni di calettamento e di estrazione degli elementi di trasmissione (disco di accoppiamento, puleggia, ingranaggio, ..) devono essere sempre eseguite con le apposite attrezzature (fig.7).

Alla fornitura, i rotori sono equilibrati dinamicamente con chiavetta piena.

Dall'anno di fabbricazione 1991, il tipo di equilibratura è segnata all'estremità dell'albero (sul lato A/azionamento, parte anteriore).
(**F** = equilibratura con chiavetta **piena**)
(**H** = equilibratura con **mezza** chiavetta)
Considerare il tipo di equilibratura prima del montaggio dell'elemento di azionamento!

Equilibratura con mezza chiavetta
In caso di elementi di azionamento con un rapporto di lunghezza di l_M < 0,8 e con una velocità superiore a 1500 giri/min., può risultare compromessa la silenzionsità di funzionamento (ved. fig.8).
Eventualmente sarà necessaria la riequilibratura, ad es. riducendo la lunghezza della chiavetta T_P sporgente dall'elemento di azionamento all'estremità dell'albero.

PERICOLO **Osservare le misure di protezione generali contro i contatti accidentali degli elementi di azionamento.**
Se la messa in servizio di un motore avviene senza l'elemento di azionamento, la chiavetta deve essere protetta contro l'espulsione.

2.4 Allacciamento

La tensione e la frequenza di rete devono coincidere con i dati riportati sulla targhetta. Sono ammessi scostamenti del ±5% della tensione o della frequenza *(per 1MA5/1MF5 ±3% della frequenza),* in quanto essi non causano una riduzione della potenza. Il collegamento e la disposizione dei ponticelli dovranno corrispondere a quelli indicati dallo schema applicato all'interno della cassetta morsetti. Si colleghi il conduttore di protezione al morsetto contrassegnato da ⏚ .

Quando si effettuano i collegamenti con morsetti di serraggio (per es. secondo DIN 46282), si faccia attenzione che i conduttori abbiano lo stesso spessore su entrambi i lati del morsetto. Questo tipo di collegamento richiede quindi che i singoli conduttori vengano ripiegati ad U o allacciati tramite capocorda. (ved. fig. 3.1). Ciò vale anche per il conduttore di protezione ed il conduttore di messa a terra esterno giallo-verde (vedi Fig.3.2).

Coppie di serraggio ammesse per viti e dadi dei morsetti (ad eccezione di quelli della morsettiera) vedi fig. 4.

2.5 Verifica della resistenza di isolamento

Prima della prima messa in servizio del motore dopo un lungo periodo di magazzinaggio o di sosta (circa 6 mesi), è necessario determinare la resistenza d'isolamento degli avvolgimenti.

PERICOLO **Durante e subito dopo la misurazione, i morsetti sono in parte sotto tensione pericolosa e non vanno quindi assolutamente toccati!**

Resistenza d'isolamento
- La **resistenza d'isolamento minima** contro massa di avvolgimenti nuovi, puliti o riparati è 10 MegaOhm
- La **resistenza critica d'isolamento R_{krit}** deve prima essere calcolata. Il calcolo avviene moltiplicando la tensione di taratura U_N, per es. 0,69 kV AC, con il fattore costante (0,5 MegaOhm/kV).

R_{krit} = 0,69 kV * 0,5 MegaOhm/kV = 0,345 MegaOhm

Misurazione
La **resistenza d'isolamento minima** degli avvolgimenti contro massa viene misurata con tensione continua di 500V. La temperatura degli avvolgimenti dovrebbe essere 25°C ± 15°C.
La **resistenza critica d'isolamento** va misurata sulla temperatura di servizio degli avvolgimenti, con tensione continua di 500V.

Verifica
Se, nel caso di una macchina nuova , pulita o rimessa a punto che è stata a lungo in maggazino oppure ferma, la **resistenza minima d'isolamento** degli avvolgimenti contro massa è minore di 10MegaOhm, l'umidità può esserne la causa. Bisogna quindi asciugare gli avvolgimenti.
Dopo un lungo periodo di esercizio, la **resistenza minima** può ridursi alla **resistenza critica** d'isolamento. Fintanto che il valore non scende al di sotto di quello della resistenza critica, si può continuare ad utilizzare la macchina. Nel momento in cui il valore scende al di sotto, la macchina deve essere immediatamente disinserita, e bisogna ricercare le cause; eventualmente dovranno essere rimessi a punto, puliti o asciugati gli avvolgimenti o le sezioni dell'avvolgimento.

2.6 Messa in servizio

Avvertenza: In caso che la **coppia** sia **fortemente disuniforme** (ad es. azionamento di compressore a stantuffi), si forma forzatamente una corrente di macchina non sinusoidale, la cui frequenza di armonica può avere una influenza non ammissibile sulla rete e può essere la causa di disturbi elettromagnetici troppo forti.

L'**alimentazione tramite convertitore** può causare disturbi elettromagnetici derivanti dalla corrente o da tensioni con una frequenza di armonica troppo elevata nei conduttori del motore.Si raccomanda perciò l'impiego di conduttori schermati.

Prima della messa in servizio bisogna verificare che:
- la resistenza d'isolamento minima sia in regola
- il rotore possa ruotare senza strisciare
- il motore sia montato ed allineato correttamente
- gli elementi di azionamento siano regolati esattamente (per es. tensione della cinghia in caso di azionamento a cinghia) e siano adatti alle condizioni d'impiego.
- utti gli allacciamenti elettrici, viti di fissaggio ed elementi di collegamento siano eseguiti correttamente e ben serrati secondo le istruzioni.
- il conduttore di protezione sia in regola
- funzionino eventuali apparecchiature supplementari (freni...)
- siano attuati tutti i provvedimenti per la protezione contro i contatti accidentali delle parti in movimento o sotto tensione.
- che il limite max. di giri (n_{max}) non venga superato (vedi targhetta).
  Avvertenza: Il numero max. di giri è ammesso solo per un breve periodo durante il funzionamento. Bisogna tener conto che ciò può incidere negativamente sul comportamento della macchina in quanto riguarda le vibrazioni, la rumorosità ed i gli intervalli di sostituzione dei cuscinetti.

⚠ ATTENZIONE **Dopo l'installazionee dei motori va verificato il perfetto funzionamento del freno (se presente).**

Questo elenco non può essere completo. Possono essere eventualmente necessarie altre prove.

3 Manutenzione

Indicazioni di sicurezza

⚠ PERICOLO **Prima di iniziare qualsiasi lavoro sulla macchina e l'impianto, in particolare prima di aprire coperture e carcasse di parti in servizio, bisogna assicurarsi che la macchina sia priva di tensione. Ciò riguarda non solamente i circuiti principali, ma bisogna tener conto anche dei circuiti ausiliari e supplementari. Vanno rispettate le "5 regole di sicurezza", ad es sec. VDE 01505:**
- togliere la tensione
- proteggere il sistema contro la reinserzione
- assicurarsi che la macchina sia priva di tensione
- collegare a terra e cortocircuitare la macchina
- sbarrare o coprire le parti adiacenti che portano tensione.

Le misure di sicurezza sopraindicate devono essere rispettate fino alla portata a termine dei lavori di manutenzione ed alla completa installazione della macchina.

Avvertenza: In caso di macchine in esecuzione a fori chiusi per lo scarico di condensa (ad es. tipo di protezione IP55 o IP56, ved. targhetta), i fori devono essere aperti da tanto in tanto per scaricare la condensa eventualmente ristagnata.
I fori per la condensa devono essere situati sul fondo della macchina.

Sostituzione dei cuscinetti, tipi di grasso
Gli intervalli per la sostituzione dei cuscinetti sono in condizioni di funzionamento normale, cioè installazione orizzontale della macchina, temperatura del refrigerante inferiore a 40°C e un no. max. dei giri motore,
- 1500/min.: ca. 20 000 ore di servizio
- 3000/min.: ca. 10 000 ore di servizio

Indipendentemente dal numero delle ore di servizio è comunque raccomandabile sostituire il grasso al più tardi dopo 3 anni (per motivi di invecchiamento).
Sotto condizioni particolari, ad es. installazione verticale della macchina, funzionamento frequente al limite dei giri n_{max} e intense sollecitazioni da vibrazioni e urti, inversioni frequenti di marcia ecc., gli intervalli per la sostituzione dei cuscinetti sono notevolmente più brevi (riduzione delle ore di servizio sopraindicate).
I motori sono provvisti di cuscinetti a sfere a gola profonda con un disco di tenuta (esecuzione ZC3). Il disco di tenuta è disposto sul lato cuscinetti della carcassa del motore (statore).

AVVERTENZA: Prima della sostituzione dei cuscinetti bisogna assicurarsi della posizione del disco di tenuta, poichè esistono diversi varianti speciali rispetto all'esecuzione standard.
Il materiale dei dischi dovrebbe essere resistente a temperature entro -20°C e + 150°C, per es. caucciù di poliacrilio (ACM).

Tipo di grasso per le macchine standard: UNIREX N3 (ESSO). Altri tipi di grasso sostituivi devono corrispondere alle norme DIN 51825-K3N. Grassi speciali, vedi targhetta.

La miscelazione di diversi tipi di grasso va evitata.

Smontare il motore quanto è necessario per eseguire i lavori. Estrarre i cuscinetti con un attrezzo adatto (ved. fig. 6) e pulire la zona di montaggio dei cuscinetti da insudiciamenti.
Pulire i cuscinetti, sostituirli eventualmente ed eseguire la rilubrificazione. Riempire a livello i spazi vuoti dei cuscinetti con grasso. I copricuscinetti oppure lo scudo non vengono lubrificati per evitare un ingrassaggio eccessivo.
Riscaldare uniformemente i cuscinetti a 80° - 100°C e calettarli. Non dare colpi forti (martellate)! Vanno sostituiti anche eventuali elementi di tenuta ad usura (ad es. anelli di tenuta, ecc.). Se gli anelli di tenuta radiali sono installati senza molla, va utilizzato anche il ricambio nuovo senza molla.

Ingrassatore
In caso di macchine con ingrassatore, osservare le indicazioni riportati sulla targhetta.

Tenute
Durante l'assemblaggio di macchine con un grado di protezione IP55 o superiore (ved. targhetta), bisogna rendere stagni le giunzioni nude tra la carcassa e gli scudi per mezzo di un mastice adeguato, non indurente, ad es. "Fluid-D".

Ventilatori in materia plastica (BG180M...200L)
I venilatori in plastica hanno due linguette fuse che si incastrano nella cava dell'albero come fissaggio assiale. Prima di togliere la ventola, le due linguette devono essere disinnestate e mantenute provvisoriamente in questa posizione, per es. per mezzo di appositi spessori.
Sulla piastra di sostegno le ventole hanno due aperture per l'estrattore che deve agganciarsi al mozzo. E' possibile che queste aperture siano chiuse da un foglio di plastica per il trasporto. Per l'estrazione e l'applicazione deve venir utilizzato un utensile adatto. Evitare assolutamente di dare martellate!

4 Motori EEx "e"-1MA5, 1MF5 sec.

DIN EN 50014/VDE 0170/0171 parte 1 e
DIN EN 50019/VDE 0170/0171 parte 6

Per questi motori, valgono in particolare o in aggiunta anche le informazioni stampate in lettere corsive.
**Per motori 1MA5 con estremità d'albero disposta verso l'alto (ved. fig.1), per es. nelle forme costruttive IM V 3, IM V 6, IM V 19, dovrà montarsi superiormente una copertura contro la caduta di corpi estranei nella cuffia della ventola del motore (vedi DIN EN 50014/VDE 0170/0171 parte 1, sez. III, comma 16.1). Tuttavia questa protezione non deve impedire in alcun modo la regolare ventilazione del motore da parte della ventola.*
La classe di temperature indicata sulla targhetta del motore deve coincidere con la classe di temperature dei gas infiammabili che eventualmente potrebbero formarsi. Ogni motore deve essere dotato di un salvamotore che sarà tarato sulla corrente di taratura del motore e che sgancerà nel tempo t_E (prova da effettuare sulla scorta della caratteristica di sgancio, sul foglio annesso al salvamotore) indicato sulla targhetta del motore. I motori a poli commutabili richiedono un interruttore per ciascun polo.
Se però la protezione contro sovraccarichi deve essere effettuata esclusivamente mediante un dispositivo di controllo diretto, basato su una sonda termometrica (vedi DIN EN 50019/ VDE 0170/0171 parte 6, appendice A-A1.b), il motore costruito appositamente per questo scopo deve essere provato a parte e fornito di apposito certificato.
Si rimanda alle norme DIN 57165/VDE 0165.
Le riparazioni devono essere effettuate in officine della Siemens oppure collaudate da un perito ufficiale riconosciuto.

SVENSKA

Allmänna anvisningar

VARNING

För undvikande av risker och skador måste de uppgifter och anvisningar som ges i denna driftsinstruktion samt övriga tillhörande driftsinstruktioner ständigt beaktas.

Med denna driftsinstruktion medföljer även en annan instruktion (gul), som innehåller kompletterande säkerhetsuppgifter för elektriska maskiner och apparater. Denna gäller alltså som komplettering av alla övriga levererade drifts- och andra instruktioner inkl. sådana som ännu ej levererats.

Beakta dessutom alla **nationella**, **lokala** och **anläggningsspecifika bestämmelser** och krav.

Specialversioner och **varianter** kan avvika i tekniska detaljer. Ta alltid kontakt med tillverkaren vid eventuella oklarheter och ange därvid **typbeteckning och tillverkningsnummer**, eller låt alla reparationer utföras av en av SIEMENS servicecentraler.

OBS: Fig. 2 ... (Reservdelar) se bilagan på sid. 16

1 Beskrivning

1.1 Användningsområde

Motorerna kan installeras i dammig eller fuktig omgivning. Isoleringen är i tropikutförande. Vid ändamålsenlig lagring eller uppställning utomhus erfordras normalt inga speciella skyddsåtgärder mot väderpåverkan på motorerna.

Ljudtrycksnivå vid 50 Hz (DIN EN 21 680 del 1)
1LA5, *1MA5* c:a 51 till 76 dB(A)

1.2 Funktionssätt och konstruktion

Motorerna 1LA5, 1LA9, 1LB5, 1LC5 och *1MA5* har egen kylning (med fläkt). Motorerna 1PP5 och 1PP9 har egen kylning, antingen - t.ex. när de används som fläktmotorer - av en specialfläkt som sitter på axeltappen eller av en extern fläkt. Motorerna 1LP5, 1LP9 och *1MF5* har självkylning (utan fläkt).
Motorer med fötter i storlekarna 100L och 112M har fötterna pågjutna på motorhuset. På storlekarna 132S t.o.m. 200L är fötterna fastskruvade på motorhuset (se Fig. 2).
En omflyttning av fötterna, t.ex. för ändring av uttagslådans placering (se Fig. 5) går därför bara på 132S t.o.m. 200L. På BG180M t.o.m. 200L

måste man skära en gänga i de befintliga borrhålen i motorhuset för att kunna sätta fast motorfötterna. Men då måste man sedan se till att fötterna kommer i samma nivå, antingen genom att slipa ned dem, eller med hjälp av underlägg.
För motorerna 1LC5 gäller dessutom driftsinstruktionen för bromsen.

2 Drift

VARNING **Vid alla arbeten på motorn måste denna vara spänningslös.**

2.1 Transport, förvaring

Vid transport bör alla **lyftöglor** på motorn utnyttjas.

VARNING **Vid transport av hela maskinuppsättningar (t.ex. med kuggväxel- eller fläktaggregat) får man bara använda befintliga lyftöglor eller lyfttappar. Lyft inte maskinuppsättningarna genom att hänga dem i de enskilda maskinerna! Se till att lyftdonet har erforderlig kapacitet!**

Om motorn efter leveransen måste förvaras i mera än 4 år under gynnsamma förhållanden (i torrt, damm- och vibrationsfritt utrymme) innan den tas i drift, så måste rullningslagren fettas in på nytt. Vid förvaring under ogynnsamma förhållanden reduceras denna tid avsevärt.

Kontrollera lindningens isolationsmotstånd enl. avsnitt 2.5.

2.2 Installation

Iskruvade lyftöglor dras åt eller tas bort efter installationen.
För motorer som monteras med axeltappen uppåt eller nedåt (t.ex. IMV5, IMV6, se Fig. 1) måste man se till att vatten ej kan tränga in i det övre lagret.
Uttagslådans överdel kan vridas 4x90 grader, när man använder en anslutningsplint med 6 klämmor och 180 grader när man använder en plint med 9 klämmor.

Vibrationsfri gång
Förutsättningen för lugn och vibrationsfri gång är dels ett stabilt fundament, dels även att motorerna är exakt uppriktade och att drivdonet är väl balanserat. Man kan t.ex. undvika mekaniska spänningar genom att lägga tunna plåtar under fötterna. I vissa fall kan det bli nödvändigt att rikta hela rotorn tillsammans med drivdonet.

2.3 Balansering, drivdon

Drivdon (t.ex. kopplingar, remskivor, kugghjul ...) skall dras på och av med lämpligt verktyg (Fig. 7).
Motorer av standardmodell är dynamiskt balanserade med full kil (fullkil).
F.o.m. 1991 markeras balanseringstypen på axeltappens frontyta på A-sidan:
(**F** = balansering med **hel** kil)
(**H** = balansering med **halv** kil, specialutförande)
Se till att det drivdon som monteras är balanserat på samma sätt!

Balansering med halv kil
På drivdon med en navlängd l som är <0,8 av axeltappens längd l_M och med varvtal >1500/min kan rotationsstörningar inträffa (se Fig.8).
Eventuellt kan efterbalansering erfordras, t.ex. genom nedslipning av den del av kilen T_P, som sticker ut ur drivdonet och utöver axelns konturlinje.

VARNING **Vidta alla allmänt erforderliga åtgärder för beröringsskyddav drivdonen. Om en motor tas i drift utan drivdon skall kilen fixeras så att den inte kan kastas ut.**

2.4 Elektrisk anslutning

Nätspänning och nätfrekvens måste stämma överens med de data som anges på märkplåten. En spännings- eller frekvensavvikelse på ±5% *(vid 1MA5/1MF5 frekvensavvikelse på ±3%)* är tillåten utan att effekten behöver reduceras.
Anslutning och kopplingen av kopplingsblecken jämförs med kopplingsschemat på insidan av locket till anslutningslådan. Skyddsledare anslutes till denna plint ⏚ .

Vid kontaktklämmor med klämbyglar (t.ex. enl. DIN 46282) måste ledarna fördelas så att det blir ungefär samma klämhöjd på vardera sidan av balken.
Detta slags anslutning kräver därför att en enstaka ledare böjs i U-form, eller att man använder en kabelsko (Fig. 3.1). Detta gäller även skyddsledaranslutningen och den externa jordningsledaren (Fig. 3.2).

Åtdragningsmomenten för elanslutningarnas skruvförband (gäller ej plintrader), se Fig. 4.

Kontroll av isolationsmotståndet
Innan motorn tas i drift första gången samt efter en längre tids lagring (c:a 6 månader) måste man fastställa lindningarnas isolationsmotstånd.

VARNING **Under och omedelbart efter mätningen ligger det delvis farliga spänningar på klämmorna, som inte får beröras.**

Isolationsmotstånd
- Minsta isolationsmotstånd gentemot jord i nya, rengjorda eller reparerade lindningar är 10 MegaOhm.
- Det kritiska isolationsmoståndet Rkrit beräknas först teoretiskt. Detta gör man genom att multiplicera märkspänningen U_N, t.ex. AC 0,69 kV, med konstanta faktorn (0,5 MegaOhm/kV):
  R_{krit} = 0,69 kV x 0,5 MegaOhm/kV = 0,345 MegaOhm

Mätning
Ledningarnas minsta isolationsmotstånd gentemot jord mäts med likspänning 500 V. Därvid skall lindningarnas temperatur vara 25°C ±15°C.
Det kritiska isolationsmotståndet skall mätas med 500 V likspänning när lindningarna har driftstemperatur.

Kontroll
Om lindningarna i en ny, just rengjord eller reparerad motor som legat i lager eller stått stilla under en längre tid har ett minsta isolationsmotstånd gentemot jord som är mindre än 10 MegaOhm, så kan det bero på fukt. Då måste lindningarna torkas.

Efter en längre tids driftsuppehåll kan minsta isolationsmotståndet sjunka ner till det kritiska isolationsmotståndet. Så länge det uppmätta värdet för det kritiska isolationsmotståndet inte underskrider det beräknade värdet, kan motorn fortfarande hållas i drift. Om detta värde underskrids måste motorn omedelbart stoppas.
Fastställ orsaken till detta. Eventuellt kan det bli nödvändigt att reparera, rengöra eller torka ut lindningar eller lindningsdelar.

2.6 Idrifttagning

OBS: Vid starkt varierande vridmoment (t.ex. drivning av en kolvkompressor) uppstår en icke-sinusformad motorström, vars övertoner kan medföra en otillåten påverkan på nätet och alstra otillåtet stora elektromagnetiska störningar.

Vid matning med omriktare kan högfrekventa ström- och spänningsövertoner i ledningarna till motorn medföra elektromagnetiska störningar. Därför rekommenderas skärmade ledningar.

Kontrollera före idrifttagningen att
- minsta isolationsmotstånden ej överskrids,
- rotorn kan vridas runt utan att skrapa emot någonstans
- motorn är korrekt monterad och riktad
- drivdonen är rätt inställda (t.ex. remspänningen vid remdrift) och lämpade för avsedd användning
- alla elektriska anslutningar, skruvförband och förbindelseelement är åtdragna och utförda enligt föreskrift
- skyddsledare resp. skyddsjordning utförts korrekt
- eventuellt förekommande tillsatser (broms etc.) är funktionsdugliga
- beröringsskydd har ordnats för rörliga och spänningförande detaljer
- maximivarvtalet n_{max} (se märkskylten), ej överskrids
  OBS: Maximivarvtalet n_{max} är det högsta kortvariga varvtal som tillåts. Kom ihåg att detta försämrar motorns buller- och vibrationsegenskaper och reducerar lagerbytesintervallet.

VIKTIGT **Kontrollera att bromsen (om sådan förekommer) fungerar ordentligt när motorerna har monterats.**

Denna uppräkning kan inte vara fullständig. Ytterligare kontroller kan erfordras.

3 Underhåll

Säkerhetsåtgärder

VARNING **Innan något arbete på motorn eller utrustningen påbörjas, framför allt innan skydden över aktiva delar öppnas, måste motorn vara skild från nätet enligt gällande föreskrifter. Uppmärksamma förutom huvudströmkretsarna även eventuellt befintliga tillsats- eller hjälpströmkretsar.**
De vanligaste "5 säkerhetsreglerna" är därvid enligt DIN VDE 0105:
- Frånkoppling
- Säkra mot återinkoppling
- Fastställ spänningslöshet
- Jorda och kortslut
- Täck över eller spärra av intilliggande delar som fortfarande står under spänning

Ovannämnda åtgärder får inte återställas förrän underhållsarbetena är avslutade och motorn är fullständigt monterad.

OBS: På motorer med slutna kondensvattenöppningar (t.ex. kapslingsklass IP55 eller IP56, se märkskylten) måste dessa öppnas då och då, så att ev. uppsamlat kondensvatten kan rinna av. Kondensvattenöppningarna skall alltid sitta längst ned på motorn.

Lagerbyte, fettsorter

Vid normala driftsförhållanden, vågrät montering av motorn, kylmedelstemperatur max. 40°C blir lagerbytesintervallet
c:a 20 000 driftstimmar för motorvarvtal 1500/min
c:a 10 000 driftstimmar för motorvarvtal 3000/min
Oberoende av antalet driftstimmar skall fettet bytas vart 3:e år på grund av åldrande.

OBS: Vid speciella driftsförhållanden - t.ex. lodrät motorinstallation, ofta förekommande körning vid maximivarvtalet n_{max}, stora vibrations- eller stötbelastningar, ofta förekommande reverserande drift - reduceras ovannämnda intervall avsevärt.

Motorerna har spårkullager med en täckbricka (ZC3-utförande) och permanentsmörjning.

Täckbrickan är placerad på den lagersida som är vänd mot motorhuset (statorn).

OBS: Ge akt på täckbrickans placering vid lagerbyte, eftersom det finns specialutföranden med annat arrangemang. Materialet i brickan skall vara temperaturhållfast mellan -20° och +150°C, t.ex. polyakrylgummi.

Fettsorter för standardmotorer: UNIREX N3 (Esso). Utbytesfett måste uppfylla kraven i DIN 51825/K3N.

Blanda inte olika fettsorter!

Ta isär motorn i den mån det behövs. Dra av rullningslagren med lämpligt verktyg (se Fig. 6). Rengör lagerstället från föroreningar. Rengör eller byt ut rullningslagren och fetta in dem på nytt.

Fyll lagrens fettutrymmen upp till kanten! Lagerlock resp. lagersköld får ingen fettfyllning, så att överfettning undviks.

Värm upp lagren likformigt till ca. 80-100°C. Undvik hårda slag (t.ex. med hammare).

Ev. nedslitna tätningar (t.ex. radialtätningsring) skall också bytas ut. Om radialtätningsringar utan fjädrar är monterade, så får inte heller den nya ringen vara försedd med fjäder

Eftersmörjningsanordning
Om motorn är byggd för eftersmörjning, så följ uppgifterna på märkskylten.

Fogtätning
När man sätter ihop maskiner i kapslingsklass IP55 eller högre (se märkskylten) så måste de blanka monteringsytorna mellan motorhuset och lagersköldarna tätas med en lämplig tätningsmassa som inte hårdnar, t.ex. Fluid-D.

Plastfläkt (BG 180M ... 200L)
Plastfläktar har två pågjutna tungor, som snäpper in i spåret i axeln och fixerar fläkten. Innan fläkten dras av måste båda tungorna frigöras och provisoriskt hållas kvar i detta läge, t.ex. av inskjutna mellanbrickor. Skivan som håller fast fläkthjulen är försedd med två hål, genom vilka man kan sätta an en avdragare mot navet. Vid leveransen kan dessa hål vara förseglade med en tunn plasthinna.
Använd alltid lämpligt verktyg vid av- och pådragning. Slå inte med hammare!

4 EEx e-motorer 1MA5, 1MF5

DIN EN 50014/VDE 0170/0171 del 1 och
DIN EN 50019/VDE 0170/0171 del 6

För dessa motorer gäller även de speciella anvisningarna som är tryckta med kursiv.
**1MA5-motorer som monteras med axeländen uppåt, t.ex. IMV3, IMV6, IMV19 (se Fig. 1) måste förses med övertäckning, så att föroreningar inte kan falla ned i fläktkåpan (se DIN EN 50014/VDE 0170/0171, del 1, avsnitt III, 16.1).*
Övertäckningen får inte påverka fläktens kylning av motorn.
Den på märkplåten angivna temperaturklassen för motorn måste stämma överens med temperaturklassen för den brännbara gas som eventuellt kan förekomma. Varje motor måste säkras med en motorskyddsbrytare, som löser ut inom den på märkplåten angivna tiden t_E om rotorn kör fast (kontroll med hjälp av utlösningskurvan som bifogas skyddsbrytaren).
Polomkopplingsbara motorer kräver en brytare för varje poltal.
Om överlastskyddet endast skall bestå av en direkt temperaturövervakning med hjälp av temperaturgivare (se DIN EN 50019/VDE 0170/0171 del 6, bilaga A-A1.b), så måste motorns utförande härför särskilt kontrolleras och bekräftas.
DIN 57165/VDE 0165 skall beaktas.
Reparationer måste genomföras i Siemens-verkstäder eller måste godkännas av en behörig person.

DEUTSCH

Ersatzteile, vom Werk lieferbar
(s. Bestellbeispiel)

1.00 Lagerung AS
.40 Lagerschild
.43 Wellendichtring
.56 Ausgleichsscheibe
.58 Federscheibe
.60 Wälzlager
.61 Federband für Lagerschildnabe (nicht immer vorhanden)

3.00 Läufer, komplett
.88 Paßfeder für Lüfter **

4.00 Ständer, komplett
.07 Gehäusefuß
.12 Flanschmutter (BG132...200)
.14 Mutter
.18 Leistungsschild
.19 Schraube
.20 Abdeckung
.30 Kontaktwinkel
.31 Erdungswinkel

5.00 Klemmenkasten, komplett
.02 Zwischenstück (entfällt bei BG180 ... 200)
.03 Dichtung (BG180...200 Schnurdichtung)
.10 Klemmenbrett, komplett
.44 Klemmenkasten-Oberteil
.45 Leitung, vollständig
.53 Verschlußstopfen
.70 Klemmbügel
.71 Klemmbügel
.83 Dichtung (BG180...200 Schnurdichtung)
.84 Klemmenkasten-Deckel
.85 Klemmenkasten-Deckel
.86 Schutzzeichen
.89 Schraube

6.00 Lagerung BS
.10 Wälzlager
.11 Federband für Lagerschildnabe (nicht immer vorhanden)
.20 Lagerschild
.23 Wellendichtring

7.00 Belüftung, komplett**
.04 Lüfter **
.40 Lüfterhaube **
.41 Winkel **

Auf- und Abziehvorrichtungen für Wälzlager, Lüfter und Abtriebselemente sind nicht lieferbar!

ENGLISH

Spare parts, available from the works
(see specimen orders)

1.00 Bearing assembly, drive end
.40 Endshield
.43 Shaft sealing ring
.56 Equalizing ring
.58 Resilient preloading disc
.60 Rolling-contact bearing
.61 Spring band for endshield hub (not always provided)

3.00 Rotor, complete
.88 Featherkey for fan**

4.00 Stator, complete
.07 Frame foot
.12 Flange nut (frame size 132/160)
.14 Nut
.18 Rating plate
.19 Screw
.20 Cover
.30 Contact angle
.31 Earthing angle

5.00 Terminal box, complete
.02 Centrepiece (does not apply to frame sizes 180 ... 200)
.03 Gasket (frame sizes 180 ... 200: cord-type gasket)
.10 Terminal board, complete
.44 Upper part of terminal box
.45 Cable, complete
.53 Plug
.70 Terminal clip
.71 Terminal clip
.83 Gasket (frame sizes 180 ... 200: cord-type gasket)
.84 Cover for terminal box
.85 Cover for terminal box
.86 Protection symbol
.89 Screw

6.00 Bearing assembly, non-drive end
.10 Rolling-contact bearing
.11 Spring band for endshield hub (not always provided)
.20 Endshield
.23 Shaft sealing ring

7.00 Ventilation accessories, complete**
.04 Fan**
.40 Fan cowl**
.41 Angle**

Mounting and extracting devices for rolling-contact bearings, fans and out elements are not available.

FRANÇAIS

Pièces de rechange, livrables par l'usine
(voir exemple de commande)

1.00 Palier côté entraînement
.40 Flasque-palier
.43 Bague d'étanchéité
.56 Rondelle de compensation
.58 Rondelle élastique
.60 Roulement
.61 Lame élastique pour moyeu du flasque (pas toujours présente)

3.00 Rotor, complet
.88 Clavette pour ventilateur **

4.00 Stator, complet
.07 Patte de la carcasse
.12 Ecrou de bride (HA 132...200)
.14 Ecrou
.18 Plaque signalétique
.19 Vis
.20 Recouvrement
.30 Equerre de contact
.31 Equerre de mise à la terre

5.00 Boîte à bornes, complète
.02 Pièce intercalaire (pas sur HA 180... 200)
.03 Joint (torique sur HA 180...200)
.10 Plaque à bornes, complète
.44 Partie supérieure de la boîte à bornes
.45 Câble complet
.53 Bouchon
.70 Etrier de serrage
.71 Etrier de serrage
.83 Joint (torique sur (HA 180...200)
.84 Couvercle de la boîte à bornes
.85 Couvercle de la boîte à bornes
.86 Symbole
.89 Vis

6.00 Palier côté opposé à l'entraînement
.10 Roulement
.11 Lame élastique pour moyeu du flasque (pas toujours présente)
.20 Flasque-palier
.23 Bague d'étanchéité

7.00 Ventilation, complète **
.04 Ventilateur **
.40 Capot du ventilateur **
.41 Equerre **

Les dispositifs d'emmanchement et d'extraction pour roulements, ventilateurs et organes de tranasmission ne sont pas livrables.

ESPAÑOL

Piezas de recambio; suministro desde fábrica (véase ejemplo de pedido).

1.00 Cojinete del LA
.40 Escudo portacojinetes
.43 Retén
.56 Disco de compensación
.58 Arandela de resorte
.60 Rodamiento
.61 Cinta elástica para el cubo del escudo portacojinetes (no se emplea siempre)

3.00 Rotor,completo
.88 Chaveta para ventilador **

4.00 Estator, completo
.07 Pata de la carcasa
.12 Tuerca de la brida (tamaño 132...200)
.14 Tuerca
.18 Placa de características
.19 Tornillo
.20 Tapa
.30 Angular de contacto
.31 Angular exterior de puesta a tierra

5.00 Caja de bornes, completa
.02 Pieza intermedia (no hay en BG 180...200)
.03 Junta (en BG 180...200 obturación trenzada)
.10 Placa de bornes, completa
.44 Parte superior de la caja de bornes
.45 Conductor completo
.53 Tapón
.70 Estribo
.71 Estribo
.83 Junta (en BG 180...200 obturación trenzada)
.84 Tapa de la caja de bornes
.85 Tapa de la caja de bornes
.86 Marca registrada
.89 Tornillo

6.00 Cojinete del LCA
.10 Rodamiento
.11 Cinta elástica para el cubo del escudo portacojinetes (no se emplea siempre)
.20 Escudo portacojinete
.23 Retén

7.00 Ventilación, completa **
.04 Ventilador **
.40 Tapa del ventilador **
.41 Angular**

No se suministran los dispositivos para extraer y calar los rodamientos, el ventilador y los elementos de accionamiento.

ITALIANO

Parti di ricambio, fornibili dalla fabbrica
(vedi esempio)

1.00 Supporto lato comando
.40 Scudo di supporto
.43 Anello torico
.56 Rondella di compensazione
.58 Rondella elastica
.60 Cuscinetto a rotolamento
.61 Nastro elastico per il mozzo dello scudo di supporto (non sempre inserito)

3.00 Rotore, completo
.88 Chiavetta per Ventilatore **

4.00 Statore, completo
.07 Piedino della carcassa
.12 Dado della flangia (BG 132/160)
.14 Dado
.18 Targhetta
.19 Vite
.20 Coperchio
.30 Angolare di contatto
.31 Angolare di messa a terra

5.00 Scatola morsetti, completa
.02 Pezzo intermedio (non presente nei BG180...200)
.03 Guarnizione (nei BG180...200 guarnizione a corda)
.10 Morsettiera completa
.44 Parte superiore della scatola morsetti
.45 Cavetto completo
.53 Tappo
.70 Morsetto di serraggio
.71 Morsetto di serraggio
.83 Guarnizione
.84 Coperchio della scatola morsetti
.85 Coperchio della scatola morsetti
.86 Targhetta (simbolo di protezione)
.89 Vite

6.00 Supporto opposto al lato comando
.10 Cuscinetto a rotolamento
.11 Nastro elastico per il mozzo dello scudo di supporto (non sempre inserito)
.20 Scudo di supporto
.23 Anello torico

7.00 Ventilazione completa**
.04 Ventola **
.40 Cuffia della ventola**
.41 Angolare **

Non sono fornibili i dispositivi di estrazione / calettamento per i cuscinetti, ventilatori ed azionamenti.

SVENSKA

Reservdelar, tillgängliga från
fabriken (se Beställningsexempel)

1.00 Lager för axeltappsidan (A-sidan), komplett
.40 Lagersköld
.43 Tätningsring
.56 Utjämningsbricka
.58 Fjäderbricka
.60 Rullningslager
.61 Fjäderband för lagersköldsnav (finns ej alltid)

3.00 Rotor, komplett
.88 Kil for fläkt **

4.00 Stator, komplett
.07 Fot
.12 Flänsmutter (BG 132/160)
.14 Mutter
.18 Märkplåt
.19 Skruv
.20 Lock
.30 Kontaktvinkel
.31 Jordningsvinkel

5.00 Uttagslåda, komplett
.02 Mellanstycke
.03 Tätning
.10 Kopplingsplint, komplett
.44 Anslutningslåda, överdel
.45 Ledning, komplett
.53 Avslutningspropp
.70 Klämbygel
.71 Klämbygel
.83 Tätning
.84 Lock till uttagslåda
.85 Lock till uttagslåda
.86 Skyddsmärke
.89 Skruv

6.00 Lager för fläktsidan (B-sidan)
.10 Rullningslager
.11 Fjäderband för lagersköldsnav (finns ej alltid)
.20 Lagersköld
.23 Axeltätning

7.00 Fläktkylning, komplett**
.04 Fläkt**
.40 Fläktkåpa **
.41 Vinkel **

På- och avdragare för rullningslager, fläkt och drivdon kan ej erhållas.

Bestellbeispiel / Order example
Exemple de commande
Ejemplo de pedido
Esempio di ordinazione
Beställningsexempel

1LA5 163-4AC70
Nr. E4A6 4567 890001
1.40 Lagerschild

** Teile entfallen bei 1LP5, 1LP9, 1PP5, 1PP9, *1MF5*. Bei 1LC5 s. zugehörige Bremsenbetriebsanleitung.
1LP5, 1LP9, 1PP5, 1PP9, *1MF5* motors don't have these parts. For 1LC5 motors refer to the relevant brake operating instructions.
Certaines piéces sont supprimées pour les types 1LP5, 1LP9, 1PP5, 1PP9, *1MF5*. Pour le type 1LC5, voir instructions de service des freins correspondantes.
Piezas suprimidas en 1LP5, 1LP9, 1PP5, 1PP9, *1MF5*. Para 1LC5 véanse las instrucciones de servicio correspondientes al freno.
Queste parti sono mancanti nei motori di grandezza 1LP5, 1LP9, 1PP5, 1PP9, *1MF5*. Per il motore 1LC v. anche le istruzioni del freno attinenti.
Förekommer ej i 1LP5, 1LP9, 1PP5, 1PP9, *1MF5*. Vid 1LC5, se tillhörande driftsinstruktion för bromsen.

BG 100L . . . 160L

1MA5 1MF5

Klemmenkasten in EEx e-Ausführung
Terminal box in EEx e design
Boîte à bornes in exécution EEx e
Caja de bornes de la ejecución EEx e
Cassetta montata in esecuzione EEx e
Anslutningslåda i explosionsskyddat utförande EEx e

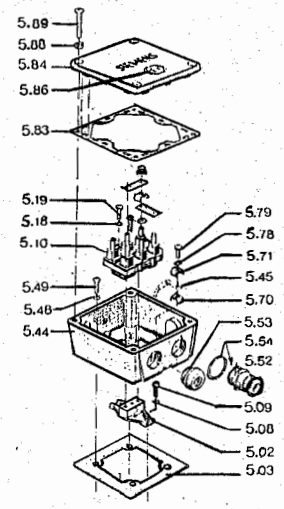

Wahlweise Teflonband für Gewinde
Alternatively use Teflon tape for thread
Envariante, utiliser un ruban de Teflon pour le filetage
A elección, cinta de Teflon para roscas
A scelta, si può anche impiegare nastro di Teflon per la filettatura
Alternative: Teflonband i stället förgänga

1LA5 1LB5 1LP5 1PP5
1LA9 1LP9 1PP9

Klemmenkasten in Normalausführung
Terminal box in standard design
Boîte à bornes en exécution normale
Caja de bornes en ejecución normal
Scatola morsetti in esecuzione normale
Anslutningslåda in normalt utförande

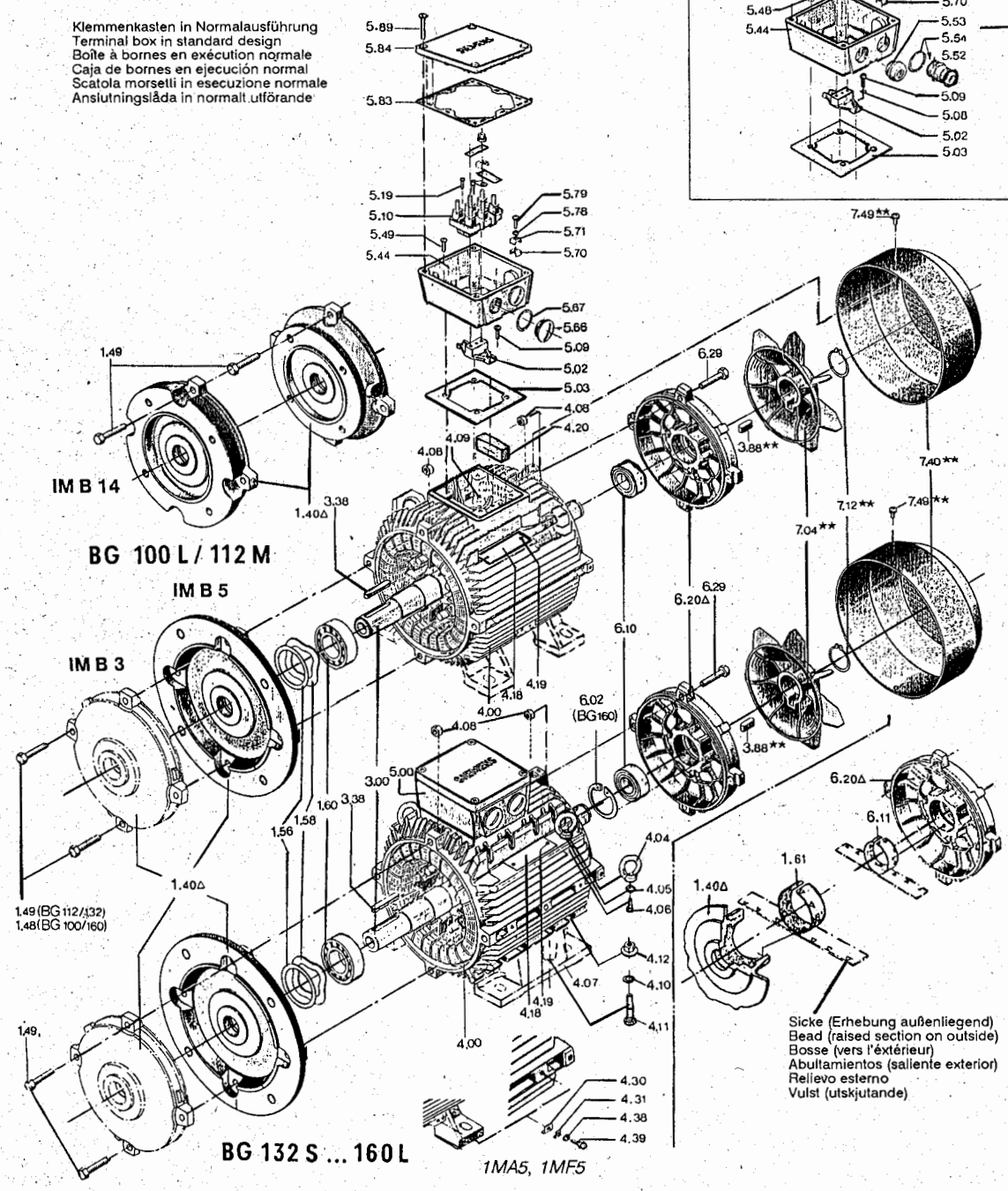

Δ Bei Aluminium-Lagerschilden ist in die Nabe entweder ein Federband (1.61/6.11) eingelegt (Sicke im Freistich einhaken) oder ein Stahlring eingegossen.
With aluminium end shields, either a spring band (1.61/6.11) is inserted (bead hooked in undercut) or a steel ring is cast in the hub.
Les flasques-paliers en aluminium comportent soit une lame élastique (1.61/6.11) introduite de telle manière que le bossage vienne se placer dans la gorge, soit un anneau en acier inséré par coulée.
En el cubo del escudo portacojinetes de aluminio puede haber una banda elástica (1.61/6.11) cuyos abultamientos se enganchan en el canal, o hay embebido un anillo de acero.
Nel mozzo degli scudi in alluminio è stato inserito o un anello in acciaio fuso, o un nastro flessibile (1.61/6.11) il cui rilievo è innestato nelle gole.
I Lagersköldar av aluminium är ett fjäderband (1.61/6.11) antingen inlagt i nevet (vulsten inpassad i underskärningen) eller ingjutet i en stålring.

Fig. 2 +

BG 180M . . . 200L

1LA5 1LB5 1LP5 1PP5
1LA9 1LP9 1PP9

Klemmenkasten in Normalausführung
Terminal box in standard design
Boîte à bornes en exécution normale
Caja de bornes en ejecución normal
Scatola morsetti in esecuzione normale
Anslutningslåda in normalt utförande

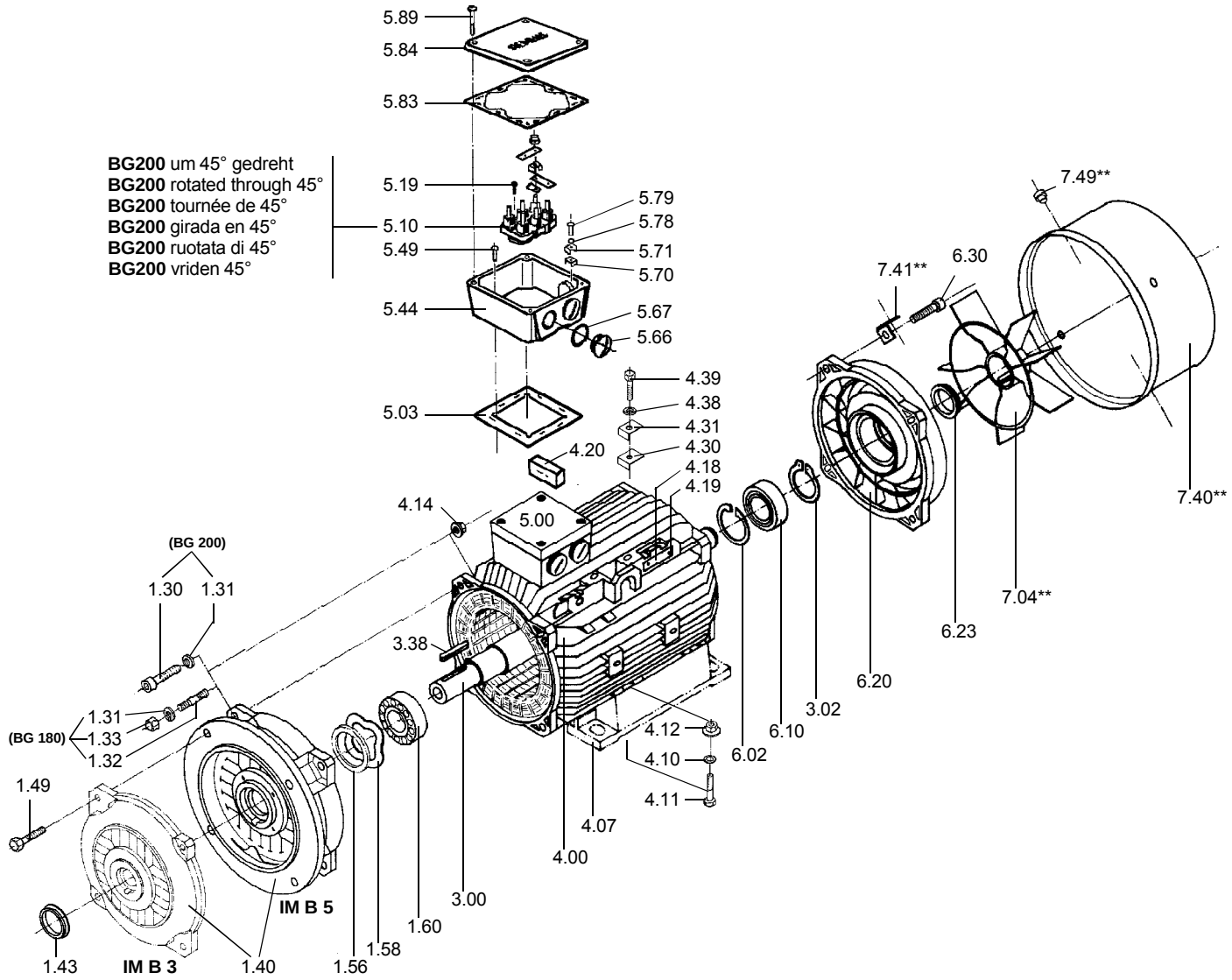

Normteile sind nach Abmessung, Werkstoff und Oberfläche im freien Handel zu beziehen.

Standard commercially available parts are to be purchased in accordance with the specified dimensions, material and surface finish.

Les **pièces normalisées** peuvent être obtenues dans le commerce d'après leurs dimensions, le matériau et l'état de surface.

Las **piezas estándar** se comprarán en comercios del ramo según las dimensiones, material y superficie especificados.

Le **parti standard** sono reperibili sul mercato secondo le dimensioni, il materiale e la finitura della superficie.

Normerade detaljer kan erhållas i öppna handeln, och skall specificeras beträffande storlek, material och ytbehandling.

1.31 5.18
4.10 5.48
4.38 5.78
5.08 5.88
DIN 128

4.05 DIN 137

3.02
7.12
DIN 471

6.02 DIN 472

4.04 DIN 580 DIN 582

1.30
6.30
DIN 912

1.49
4.06
4.11
4.39
5.09
5.19
5.49
5.79
6.29
7.49**
DIN 931 DIN 933

1.33
4.08
DIN 934

1.32 DIN 939

3.38 DIN 6885

1.48 DIN 6912

4.09 DIN 7343
DIN 7344 (BG 112)

5.52
5.54
5.66
5.67
DIN 46320

1.60
6.10
DIN 625
Lagertyp:
Type of bearing:
Type de roulement:
Tipo de cojinete:
Tipo di cuscinetto:
Lagertyp:

Fig. 2

Anschließbare Querschnitt je nach Klemmengröße (ggf. reduziert durch Größe der Leitungseinführungen)
Conductor cross-sections connectable to the various terminals (may be reduced by size of cable entries)
Sections raccordables suivant la taille de la borne (réduction éventuelle par la taille des entrées de câbles)
Sección conectable segùn tamaño del borne (en caso dado, más pequeña debido al tamaño de las entradas de linea)
Diamentri dei collegamenti a sec. delle misure dei morsetti (eventualmente sono ridotte le dimensioni delle aperture per i conduttori)
Anslutningsbara ledarareor för olika klämstorlekar (ev. reducerat med hänsyn till genomföringens storlek)

... 25 mm²

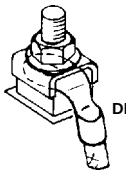

Bei Anschluß mit DIN- Kabelschuh ist dieser nach unten abzuwinkeln!

If connections are made with DIN cable lugs, bend the cable lugs downwards.

Lorsque le raccordement est réalisé par cosses DIN, celles-ci doivent être pliées vers le bas.

Si la conexión se efectúa con terminales para cables DIN, habrá que doblarlos hacia abajo.

Nel collegamento con capocorda conforme alle norme DIN, questo va piegato verso il basso.

Vid anslutning med kabelsko enl. DIN skall denna bockas nedåt.

... 10 mm²

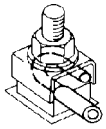

Anschluß eines einzelnen Leiters mit Klemmbügel.

Connecting a single conductor with a terminal clip.

Raccordement d'un seul conducteur à une borne à étrier.

Conexión de un solo conductor con un estribo.

Allacciamento di ogni singolo conduttore con morsetto di serraggio.

Anslutning av en enkelledare med klämbygel.

... 25 mm²

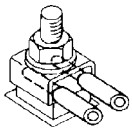

Anschluß von zwei etwa gleich dicken Leitern mit Klemmbügel.

Connecting two conductors of almost equal thickness with a terminal clip.

Deux conducteurs de diamètre à peu pré équivalents, raccordés à une borne à étrier.

Conexión de dos conductores de diámetro aproximadamente igual, con un estribo.

Allacciamento di due conduttori di stesso o pressocchè indentico spessore con morsetto di serraggio.

Anslutning av två ungefär lika tjocka ledare med klämbygel.

Fig. 3.1

... 10 mm²

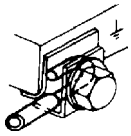

Anschluß eines einzelnen Leiters unter äußerem Erdungswinkel.

Connecting a single conductor under the outer earthing angle.

Raccordement d'un seul conducteur à une équerre extérieure de mise à la terre.

Conexión de un solo conductor bajo el angular exterior de puesta a tierra.

Allacciamento di ogni singolo conduttore sotto angolare di messa a terra esterno.

Anslutning av en enkelledare under extern jordningsvinkel.

... 25 mm²

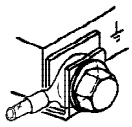

Bei Anschluß mit DIN- Kabelschuh unter äußerem Erdungswinkel.

If connections are made with DIN cable lugs, under the outer earthing angle.

Lorsque le raccordement est réalisé par cosses DIN, à une équerre extérieure de mise à la terre.

Si la conexión se efectúa con terminales para cables DIN, bajo el angular exterior de puesta a tierra.

Nel collegamento con capocorda conforme alle norme DIN, sotto angolare di messa a terra esterno.

Vid anslutning med kabelsko enl. DIN under extern jordningsvinkel.

Fig. 3.2

Anziehdrehmomente für Schraubenverbindungen der elektrischen Anschlüsse - Klemmenbrettanschlüsse (außer Klemmenleisten)
Tightening torques for screwed electrical connections - terminal board connections (except for terminal strips)
Couples de serrages des bornes de la plaque à bornes (ne concerne pas les borniers)
Pares de apriete para uniones atornilladas de las conexiones eléctricas en la placa de bornes (exceptuando las regletas de bornes).
Coppie di serraggio per le viti di attacco di collegamenti elettrici / dei portamorsetti (escluse morsettiere)
Åtdragningsmoment för de elektriska anslutningarnas skruvförband (utom på kontaktplintar)

Gewinde- Æ / Thread- Æ Æ du filetage / Æ de la rosca Diametro del filetto / Gängdimeter		M4	M5	M6	M8	M10	M12	M16
Anziehdrehmoment Tightening torque Couple de serrage Par de apriete Coppia di serraggio Åtdragningsmoment	N m min	0,8	1,8	2,7	5,5	9	14	27
	N m max	1,2	2,5	4	8	13	20	40

Die obigen Anziehdrehmomente gelten soweit keine anderen Werte angegeben sind!
The above values of tightening torque are applicable unless alternative values are given elsewhere.
Les couples de serrage indiqués ci-dessus sont valables pour autant qu'aucune valeur spécifique ne soit donnée.
Estos pares de apriete rigen mientras no se indiquen otros.
Le coppie di serraggio indicate qui di sopra sono valide se non sono indicati altri valori.
Ovanstående åtdragningsmoment gäller om ej andra värden angivits!

Fig. 4

Ausführung mit seitlich angeordnetem Klemmenkasten / Motor version with side-mounted terminel box
Version avec boite à bornes sur le côté / Ejecución con caja de bornes lateral
Esecuzione con cassetta morsetti diposta lateralmente / Utförande med uttagslådan placerad på sidan

BG 100L ... 112M

BG 132S ... 160L

BG 180M ... 200L

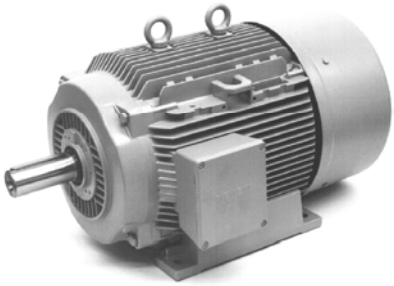

Fig. 5

BG = Baugrößen / Frame sizes / Désignation de carcasse / Tamaños constructivos / Grandezze / Utföringsstorlekar

Lagerwechsel / Changing bearings / Remplacement des roulements
Cambio de cojinetes / Sostituzione del cuscinetto / Lagerbyte

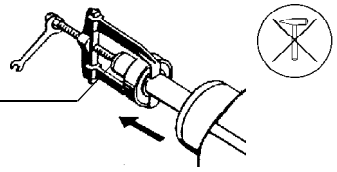

Fig. 6

Auf- und Abziehen von Abtriebselementen / Pressing on and pulling off drive elements
Emmanchement et extraction d'organes de transmission / Calado y extracción de elementos de accionamiento
Calettamento ed estrazione degli elementi di azionamento / På- och avdragning av drivdon

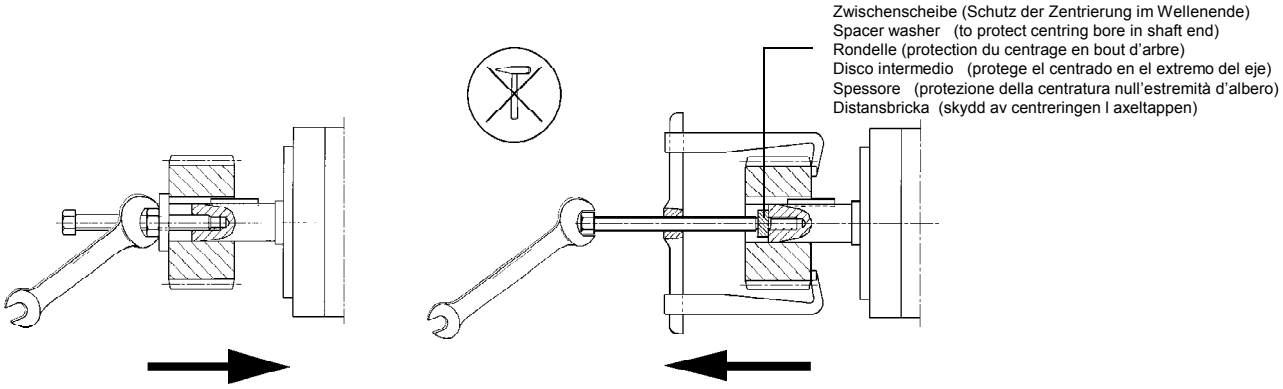

Zum Aufziehen von Abtriebselementen (Kupplung, Zahnrad, Riemenscheibe usw.), Gewinde im Wellenende benutzen und - sofern möglich - Abtriebselemente nach Bedarf erwärmen. Zum Abziehen geeignete Vorrichtung verwenden. Es dürfen beim Auf- und Abziehen keine Schläge (z.B. mit Hammer oder ähnlichem) oder größere als die laut Katalog zulässigen radialen oder axialen Kräfte über das Wellenende auf die Motorlager übertragen werden.

Use the tapped hole provided in the end of the shaft for fitting drive components such as couplings, gearwheels, belt pulleys, etc. and, if possible, heat the components as necessary. Use a suitable puller tool for removing the components. Do not strike the components, e.g. with a hammer or similar tool, when fitting or removing them and do not exert more than the maximum value of radial or axial force - according to the catalog - transmitted to the motor bearings through the shaft extension.

Pour monter les organes de transmission (accouplements, roues dentées, poulies à courroie, etc.), utiliser le taraudage du bout d'arbre. Au besoin et lorsque cela est possible, chauffer les organes de transmission. Pour le démontage, utiliser un dispositif approprié. Aucun coup (par ex. marteau) supérieur aux efforts axiaux et radiaux admissibles mentionnés au catalogue ne doit être transmis par l'arbre aux roulements en cours de montage ou de démontage.

Para calar los elementos de accionamiento (acoplamientos, rueda dentada, polea, etc.) utilizar la rosca en el extremo del eje y - siempre que sea posible - calentar convenientemente dichos elementos. Utilizar el dispositivo adecuado para la extracción. Durante las operaciones de calado o extracción no golpear (p. ej. con martillo o similar) ni ejercer sobre los cojinetes del motor a través del extremo del eje fuerzas axiales o radiales superiores a las admisibles según catálogo.

Per calettare gli elementi di azionamento (giunti, ruote dentate, pulegge, ecc.), utilizzare il foro filettato nell'estremità d'albero e, se possibile, riscaldare gli elementi di azionamento. Per l'estrazione vanno adoperati attrezzi adatti. Sono da evitare colpi o martellate, e forze radiali o assiali trasmesse dall'estremità d'albero ai cuscinetti che siano maggiori di quelle consentite sec. il catalogo.

Använd axeltappens gänga vid pådragning av drivdon (koppling, kugghjul, remskiva etc) och värm om möjligt upp drivdonen om så behövs. Använd lämpliga verktyg för avdragningen. Några slag (t.ex. med hammare e.dyl.) får aldrig förekomma vid på- och avdragning, och radiella och axiella krafter som är större än de som anges i katalogen får inte överföras till motorlagren via axeltappen.

Fig. 7

Auswuchtung mit halber Paßfeder / Balancing with half featherkey
Equilibrage avec demi-clavette / Equilibrado con media chaveta
Equilibratura con mezza chiavetta / Balansering med halv kil

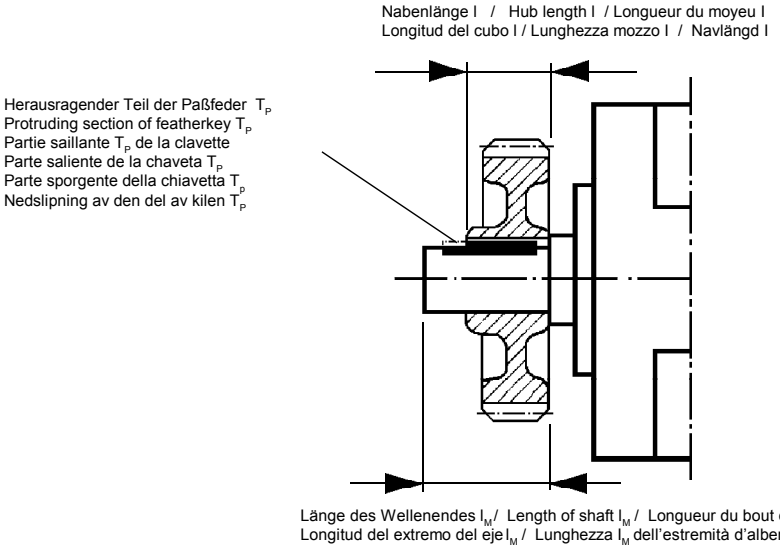

Fig. 8

Änderungen vorbehalten/ Subject to change without prior notice/ Sous réserve de modifications/ Sujeto a modificaciones/ Con riserva di eventuali modifiche/ Förbehåll för ändringar

Geschäftsgebiet **Antriebstechnik / Drives Systems Division**
Geschäftszweig **Niederspannungsmotoren / Subdivision Low-Voltage Motors**
D-97615 Bad Neustadt an der Saale

Antriebs-, Schalt- und Installationstechnik von Siemens

Siemens Aktiengesellschaft

Bestell-Nr. / Order No.: 610.42348.21.a
Printed in the Federal Republic of Germany
AG 01 94 MA 20 De-En-Fr-Sp-It-Sv

SIEMENS

CE

Sicherheits- und Inbetriebnahmehinweise für Niederspannungs-Asynchronmotoren

(gemäß Niederspannungsrichtlinie 73/23/EWG)

Typ: **1LA, 1LB, 1LC, 1LD, 1LF, 1LG, 1LL, 1LN, 1LP, 1LS, 1LT, 1LV, 1PB, 1PF, 1PK, 1PP, 1PQ, 1PR**

Achshöhe: 56 bis 450 mm

1 Allgemein

Elektromotoren haben gefährliche, spannungsführende und rotierende Teile sowie möglicherweise heiße Oberflächen. Alle Arbeiten zum Transport, Anschluß, zur Inbetriebnahme und regelmäßige Instandhaltung sind von **qualifiziertem, verantwortlichem Fachpersonal** auszuführen (VDE 0105; IEC 364 beachten). Unsachgemäßes Verhalten kann schwere **Personen- und Sachschäden** verursachen. Die jeweils geltenden **nationalen, örtlichen** und **anlagespezifischen Bestimmungen und Erfordernisse** sind zu berücksichtigen.

2 Bestimmungsgemäße Verwendung

Diese Motoren sind für gewerbliche Anlagen bestimmt.Sie entsprechen den harmonisierten Normen der Reihe **EN 60034 (VDE 0530).** Der Einsatz im **Ex-Bereich** ist **verboten**, sofern nicht **ausdrücklich** hierfür vorgesehen (Zusatzhinweise beachten). Falls im Sonderfall - bei Einsatz in **nicht** gewerblichen Anlagen - erhöhte Anforderungen gestellt werden (z. B. Berührungsschutz gegen Kinderfinger), sind diese Bedingungen bei der Aufstellung anlagenseitig zu gewährleisten.
Die Motoren sind für Umgebungstemperaturen von **-20°C bis +40°C** sowie Aufstellungshöhen ≤ **1000 m** über NN bemessen. Abweichende Angaben auf dem Leistungsschild **unbedingt** beachten.Die Bedingungen am Einsatzort müssen **allen** Leistungsschildangaben entsprechen.

Niederspannungsmotoren sind **Komponenten** zum Einbau in Maschinen im Sinne der Maschinenrichtlinie 89/392/EWG. Die **Inbetriebnahme** ist solange untersagt, bis die Konformität des Endproduktes mit dieser Richtlinie festgestellt ist (EN 60204-1 beachten).

3 Transport, Einlagerung

Nach der Auslieferung festgestellte **Beschädigungen** dem Transportunternehmen sofort mitteilen; die **Inbetriebnahme** ist ggf. **auszuschließen**. Eingeschraubte Transportösen fest anziehen. Sie sind für das Gewicht des Motors ausgelegt, **keine** zusätzlichen Lasten anbringen. Wenn notwendig, geeignete, ausreichend bemessene Transportmittel (z. B. Seilführungen) verwenden.
Vorhandene **Transportsicherungen** vor Inbetriebnahme **entfernen.** Für weitere Transporte erneut verwenden. Werden Motoren eingelagert, auf eine **trockene, staubfreie** und **schwingungsarme** (v_{eff} ≤ 0,2 mm/s) Umgebung achten (Lagerstillstandsschäden). Bei längerer Einlagerungszeit verringert sich die Fettgebrauchsdauer der Lager. Vor Inbetriebnahme Isolationswiderstand messen. Bei Werten ≤ 1kΩ je Volt Bemessungsspannung Wicklung trocknen.

4 Aufstellung

Auf gleichmäßige Auflage, gute Fuß- bzw. Flanschbefestigung und genaue Ausrichtung bei direkter Kupplung achten. Aufbaubedingte Resonanzen mit der Drehfrequenz und der doppelten Netzfrequenz vermeiden. Läufer **von Hand** drehen, auf ungewöhnliche Schleifgeräusche achten. **Drehrichtung** im ungekuppelten Zustand **kontrollieren** (Abschnitt 5 beachten).
Abtriebselemente (Riemenscheibe, Kupplung ...) nur mit geeigneten Vorrichtungen auf- bzw. abziehen (Erwärmen!) und mit einem Berührungsschutz abdecken. Unzulässige Riemenspannungen vermeiden (Katalog, Techn. Liste).
Der **Wuchtzustand** ist auf dem Wellenspiegel oder Leistungsschild angegeben (**H** = Halb-, **F** = Vollkeilwuchtung). Bei Montage des Abtriebselementes auf Wuchtzustand achten! Bei Halbkeilwuchtung **überstehenden sichtbaren** Paßfederanteil abarbeiten.
Bei Bauformen mit Wellenende nach unten wird ein Schutzdach empfohlen, bei Wellenende nach oben ist **bauseits** eine Abdeckung vorzusehen, die das Hineinfallen von Fremdkörpern in den Lüfter verhindert.
Belüftung nicht behindern! Abluft - auch benachbarter Aggregate - darf nicht unmittelbar wieder angesaugt werden.

5 Elektrischer Anschluß

Alle Arbeiten dürfen nur von **qualifiziertem Fachpersonal** am **stillstehenden** Motor im **freigeschalteten** und **gegen Wiedereinschalten gesicherten** Zustand vorgenommen werden. Dies gilt auch für Hilfsstromkreise (z.B. Stillstandsheizung).

Spannungsfreiheit prüfen !

Überschreiten der **Toleranzen in EN 60034 - 1 / IEC 34-1** - Spannung ±5%, Frequenz ±2%, Kurvenform, Symmetrie - erhöht die Erwärmung und beeinflußt die elektromagnetische Verträglichkeit. Leistungsschildangaben sowie das Anschlußschema im Anschlußkasten beachten.
Der Anschluß muß so erfolgen,daß eine **dauerhaft sichere**, elektrische Verbindung aufrecht erhalten wird (keine abstehenden Drahtenden); zugeordnete Kabelendbestückung verwenden. Sichere **Schutzleiterverbindung** herstellen.

Anziehdrehmomente für Klemmenplatten-Anschlüsse

	Gewinde- ∅	M4	M5	M6	M8	M10
	Anziehdreh-moment [Nm]	0,8...1,2	1,8...2,5	2,7...4	5,5...8	9...13

Luftabstände zwischen blanken, spannungsführenden Teilen untereinander und gegen Erde ≥ 5,5 mm (U_N ≤ 690 V) .

Im Anschlußkasten dürfen sich **keine** Fremdkörper, Schmutz sowie Feuchtigkeit befinden. Nicht benötigte Kabeleinführungsöffnungen und den Kasten selbst **staub-** und **wasserdicht** verschließen.
Für den Probebetrieb ohne Abtriebselemente **Paßfeder sichern**.
Bei Motoren mit Bremse vor der Inbetriebnahme die einwandfreie Funktion der Bremse prüfen.

6 Betrieb

Schwingstärken v_{eff} ≤ 3,5 mm/s (P_N ≤15 kW) bzw. v_{eff} ≤ 4,5 mm/s (P_N > 15 kW) sind im gekuppelten Betrieb unbedenklich.
Bei Veränderungen gegenüber dem Normalbetrieb - z.B. **erhöhte Temperaturen, Geräusche, Schwingungen** - ist im **Zweifelsfall** der Motor abzuschalten. Ursache ermitteln, eventuell Rücksprache mit dem Hersteller. Schutzeinrichtungen auch im Probebetrieb nicht außer Funktion setzen.
Bei starkem Schmutzanfall Luftwege regelmäßig reinigen. Vorhandene verschlossene **Kondenswasserlöcher** von Zeit zu Zeit öffnen!

Bei Motoren **ohne Nachschmiereinrichtung** Lager- bzw. Fettwechsel nach Herstellerangaben, spätestens jedoch nach 3 Jahren. Lagerung **mit Nachschmiereinrichtung** bei laufendem Motor nachfetten. Schmierschild beachten!
Bei Motoren mit Fremdbelüftung muß der Fremdlüfter bei Betrieb eingeschaltet sein.

7 Weitere Informationen

Informationen über eventuelle Zusatzeinrichtungen sind zu beachten! Weitere Einzelheiten enthalten unsere ausführlichen Betriebs- und Instandhaltungsanleitungen (DEUTSCH / ENGLISH / FRANÇAIS / ESPAÑOL / ITALIANO / SVENSKA). Sie werden Ihnen auf Wunsch, unter Angabe des Typs und der Maschinen-Nummer, zugeschickt.

Diese Sicherheits- und Inbetriebnahmehinweise sind aufzubewahren!

Ausgabe / Edition 11.98
© Siemens AG 1995 All Rights Reserved

Bestell - Nr. / Order No.: 610.43 423.34.b
DEUTSCH / ENGLISH / FRANÇAIS / ESPAÑOL / ITALIANO / SVENSKA
NEDERLANDS / PORTUGUÊS / ΕΛΛΗΝΙΚΑ / DANSK / SUOMI / ČESKY

SIEMENS

CE

ENGLISH

Information on safety and commissioning for low voltage asynchronous motors

(in accordance with L. V. directive 73/23/EEC)

Types: **1LA, 1LB, 1LC, 1LD, 1LF, 1LG, 1LL, 1LN, 1LP, 1LS, 1LT, 1LV, 1PB, 1PF, 1PK, 1PP, 1PQ, 1PR**

Shaft height: 56 to 450 mm

1 General information

Electric motors have dangerous voltage-carrying and rotating components as well as surfaces that may become hot. All work involved in the transport, connection, commissioning and regular maintenance must be carried out by **qualified, responsible specialists** (note VDE 0105; IEC 364). Improper behaviour may result in serious **injury** and **damage to property**. The applicable **national, local** and **works regulations** and **requirements** must be complied with.

2 Intended use

These motors are intended for commercial installations. They comply with the harmonized standards of the **EN60034 (VDE 0530)** series. Utilization in areas subject to **explosion hazard is not permitted**, unless **expressly intended** for this purpose (see additional notes). In certain special cases, for example, on use in non-commercial installations, if requirements are more strict (e.g. protection against contact with children's fingers), it is the responsibility of the customer to ensure compliance on installing the equipment.
The motors are rated for ambient temperatures of **-20°C to +40°C** and site altitudes ≤ **1000 m** above sea level. Any contradictory information on the rating plate **must** be observed. The conditions on site **must** correspond to all rating plate specifications.

Low voltage motors are **components** for installation in machinery in terms of the Machine directive 89/392/EEC. **Commissioning** must not take place until it has been proved that the end product conforms with this guideline (please note EN 60204-1).

3 Transport and storage

Any **damage** detected after dispatch should be reported immediately to the transport company and **commissioning** must be postponed. Tighten the eyebolts. They are designed for the weight of the motor only therefore do not attach any additional loads. If necessary, use suitable, adequately dimensioned transporting equipment (e.g. rope guides).
Remove existing **shipping braces** before commissioning; and reuse for subsequent transport. If motors are stored, a **dry**, **dust-free** and **low vibration** (v_{rms} ≤ 0.2 mm/s) environment is important (to avoid bearing standstill damage). On long-term storage, the regrease interval of the bearings is reduced.
Before commissioning, measure the impedance of the insulation. If values ≤1kΩ per volt of rated voltage are measured, the windings must be dried out.

4 Installation

Ensure an even underlying surface, good foot or flange fixing and precise alignment for direct coupling. It is important to ensure that the mounting conditions do not cause resonance with the rotational frequency and the doubled supply frequency. Turn the rotor **by hand** and listen for any unusual grinding noises. **Check** the **direction of rotation** in the decoupled state (note section 5).
Only mount or remove drive components (belt pulley, coupling, etc.) using suitable tools (heat up), and cover to shield against contact. Avoid unpermissible belt tensions (see catalogue and technical data). The **balancing type** is specified on the shaft end face or rating plate (**H** = half- and **F** = full-key balancing). On mounting the drive, note the balancing type! In the case of half key balancing, the **protruding, visible part** of the half-featherkey must be removed.
A canopy is recommended for designs with the shaft end pointing downwards, and with the shaft end pointing upwards a cover must be **provided by the customer** to prevent foreign bodies from falling into the fan.
Do not obstruct ventilation! Discharged air, also from neighbouring equipment, must not be sucked in again immediately.

5 Electrical connection

Work is only permitted to be carried out by **qualified specialists** on the **stationary motor**, while **disconnected** and **prevented from being switched on again**. This also applies for the auxiliary power circuits (e.g. Anti-condensation heaters).

Check that the equipment is potential-free!

If the **tolerance limits** are exceeded that are specified in **EN 60034, part 1 / IEC 34-1** (voltage ± 5%, frequency ± 2%, shape of curve, symmetry) the heating effect is increased and the electromagnetic compatibility is affected. Please note the specifications on the rating plate and the connection diagram in the terminal box.
Connections must be made in such a way as to ensure that a **permanently** safe electrical connection is maintained (no protruding wire ends); use the corresponding cable end pieces. Create a **safe earth continuity connection**.

Tightening torques for terminal board connections

	Thread ∅	M4	M5	M6	M8	M10
	Tightening torque [Nm]	0,8...1,2	1,8...2,5	2,7...4	5,5...8	9...13

Clearences in air between bare live parts themselves and between bare live parts and earth must be ≥ 5,5 mm (U_{rated} ≤ 690 V) .

It must be ensured that the terminal box does not contain **foreign** bodies, dirt or humidity. Seal any unused cable entry openings against **dust** and **water**.
Secure the **featherkey** on test operation without drive components. For motors with brakes, check that the brakes are operating perfectly before commissioning.

6 Operation

Vibration levels of v_{rms} ≤ 3.5 mm/s (P_N ≤ 15 kW) or v_{rms} ≤ 4.5 mm/s (P_N > 15 kW) are quite acceptable in the coupled state.
If deviations from normal operation occur - e.g. **increased temperatures, noises, vibration** - the motor should be **switched off** in the event of doubt. Determine the causes and contact the manufacturer if necessary. Do not disconnect protective equipment, even under test operation.
Under dirty operating conditions, clean the air channels regularly. Open any closed **condensate water** holes from time to time!

For motors **without regreasing facilities**, bearing or grease replacement must be carried out in accordance with the manufacturer's instructions, or after 3 years, whichever is sooner.
Bearings **with regreasing facilities** must be regreased when the motor is running. Please note the greasing plate!
In the case of **motors with separate ventilation**, the separately-driven fan must be switched on throughout motor operation.

7 Further information

Information provided about any additional equipment must be noted! More information is available in our detailed operating and maintenance instructions (DEUTSCH / ENGLISH / FRANÇAIS / ESPAÑOL / ITALIANO/ SVENSKA). They will be sent on request if the machine type and number are also stated.

These notes on safety and commissioning must be retained for future reference!

SIEMENS

CE

FRANÇAIS

Consignes de sécurité et de mise en service pour moteurs asynchrones à basse tension

(selon directive basse tension 73/23/CEE)

Type: **1LA, 1LB, 1LC, 1LD, 1LF, 1LG, 1LL, 1LN, 1LP, 1LS, 1LT, 1LV, 1PB, 1PF, 1PK, 1PP, 1PQ, 1PR**

Hauteur d'axe: 56 à 450 mm

1 Généralités

Les moteurs électriques comportent des pièces dangereuses, sous tension ou rotatives, et éventuellement des surfaces portées à haute température. Tous les travaux de manutention, raccordement, mise en service et entretien régulier sont à exécuter par des **personnes qualifiées responsables** (respecter VDE 0105; CEI 364). Un comportement inapproprié peut occasionner des **blessures** graves et des **dommages matériels** importants. Il convient de respecter les **normes et dispositions nationales**, **locales** et **spécifiques de l'établissement**.

2 Utilisation conforme

Ces moteurs sont destinés à l'emploi industriel. Ils sont conformes aux normes harmonisées de la série **EN60 034 (VDE 0530)**. L'utilisation en **atmosphère explosible** est **interdite**, sauf autorisation **expresse** (consignes complémentaires). Si des emplois particuliers – dans des établissements **non** industriels – imposent des contraintes de sécurité plus sévères (ex. protection contre les contacts de doigts d'enfant), les mesures de protection sont à prendre par le client au moment de l'installation.
Les moteurs sont conçus pour des températures ambiantes de **-20°C à +40°C** et une altitude d'installation ≤ **1000 m**. Respecter impérativement les indications divergentes sur la plaque signalétique. Les conditions sur le site doivent être conformes **en tout point** avec les indications de la plaque signalétique.

Les moteurs à basse tension sont des **composants** à intégrer dans des machines au sens de la directive machines 89/392/CEE. La **mise en service** est interdite tant que la conformité du produit fini avec cette directive n'est pas constatée (EN 60204-1).

3 Transport, entreposage

Notifier immédiatement au transporteur les **endommagements** constatés après la livraison, **ajourner** éventuellement la **mise en service**. Serrer fortement les oeillets de levage vissés. Ils sont dimensionnés pour le poids du moteur ; ne **pas** y accrocher **de charge** supplémentaire. Si nécessaire, utiliser des moyens de manutention appropriés suffisamment dimensionnés (ex. guide-élingue).
Avant la mise en service, **enlever** les **protections pour le transport**. Les conserver pour une réutilisation ultérieure éventuelle. Pour l'entreposage des moteurs, veiller à un environnement **sec**, **non poussiéreux** et **exempt de vibrations** (v_{eff} ≤ 0,2 mm/s) (dégradation des roulements à l'arrêt). Un entreposage de longue durée réduit la durée d'utilisation de la graisse des roulements.
Avant la mise en service, mesurer la résistance d'isolement. Sécher les enroulements si les valeurs mesurées sont ≤ 1kΩ par volt de tension assignée.

4 Installation

Veiller à un appui plan, à une bonne fixation des pattes ou de la bride et à un alignement précis des lignes d'arbres en cas d'accouplement direct. Eviter les résonances à la simple ou double fréquence de rotation dues aux conditions de montage. Tourner le rotor **à la main** pour déceler d'éventuels bruits de frottement anormaux. **Contrôler** le **sens de rotation** à l'état désaccouplé (voir chap. 5)
Ne monter et démonter les organes de transmission (poulie, accouplement, ...) qu'avec les dispositifs appropriés (en chauffant !) et les placer sous carter de protection. Tendre les courroies aux valeurs prescrites (catalogue, liste technique).
Le **mode d'équilibrage** est inscrit en bout d'arbre ou sur la plaque signalétique (**H** = demi-clavette, **F** = clavette entière). En tenir compte lors du montage de l'organe de transmission ! Dans le cas de l'équilibrage avec demi-clavette, supprimer les parties visibles de la clavette **qui font saillie.**

Un auvent est recommandé pour les formes de constructions à bout d'arbre vers le bas ; si le bout d'arbre est dirigé vers le haut, l'utilisateur devra prévoir un recouvrement pour empêcher la chute de corps étrangers dans le ventilateur.
Ne pas entraver la ventilation : l'air évacué – aussi de machines voisines – ne doit pas être directement réaspiré.

5 Raccordement électrique

Tous les travaux ne doivent être réalisés que par des **personnes qualifiées** sur le moteur à **l'arrêt, hors tension** et **condamné**. Ceci s'applique aussi aux circuits auxiliaires (ex. chauffage à l'arrêt).

Vérifier l'absence de tension !

Le dépassement des **tolérances** spécifiées dans **EN 60034 , partie 1 / CEI 34-1** – tension ± 5%, fréquence ±2%, forme d'onde, symétrie – accroît l'échauffement et influe sur la compatibilité électromagnétique.
Respecter les indications de la plaque signalétique ainsi que le schéma de branchement dans la boîte à bornes.
Le branchement est à réaliser de façon à établir une liaison électrique **à sécurité durable** (pas d'extrémités de fils en l'air) ; équiper en conséquence les extrémités des conducteurs. Etablir des **connexions sûres du conducteur de protection.**

Couples de serrage des connexions sur la plaque à bornes

	Diamètre fitetage	M4	M5	M6	M8	M10
	Couple de serrage [Nm]	0,8...1,2	1,8...2,5	2,7...4	5,5...8	9...13

Distances dans l'air des parties nues sous tension entre elles et par rapport à la terre ≥ 5,5 mm (U_N ≤ 690 V).

La boîte à bornes doit être **exempte** de corps étrangers, de saletés et d'humidité. Fermer **hermétiquement** les entrées de câbles inutilisées et la boîte à bornes elle-même.
Pour la marche d'essai sans organes de transmission, **assujettir la clavette à l'arbre.** Sur les moteurs avec frein vérifier le fonctionnement correct du frein avant la mise en service.

6 Fonctionnement

Les vibrations v_{eff} ≤ 3,5 mm/s (P_N ≤ 15 kW) ou v_{eff} ≤ 4,5 mm/s (P_N > 15 kW) sont inoffensives à l'état accouplé. Si l'on constate des conditions divergentes du régime normal – ex. **suréchauffement, bruit, vibrations** – arrêter le moteur **en cas de doute**. Déterminer la cause ; consulter éventuellement le constructeur. Ne pas rendre inopérant les dispositifs de protection, même pas en marche d'essai.
En atmosphère sale et poussiéreuse, nettoyer régulièrement les circuits d'air. Ouvrir de temps à autre les **purgeurs de condensat**.

Sur les moteurs **sans graisseur**, remplacer les roulements ou la graisse en se conformant aux indications du constructeur, et au plus tard après trois ans.
Sur les moteurs **avec graisseur**, graisser les roulements en marche. Respecter les indications de la plaquette de graissage !
Dans le cas de **moteurs à refroidissement séparé**, le motoventilateur doit être en marche lors du fonctionnement du moteur.

7 Informations complémentaires

Respecter les informations relatives aux éventuels équipements additionnels ! Vous trouverez d'autres détails dans nos instructions de service et de maintenance (DEUTSCH/ENGLISH/FRANÇAIS/ ESPAÑOL/ITALIANO/SVENSKA). Nous vous les faisons parvenir sur indication du type et du numéro de machine.

Conserver soigneusement les présentes consignes de sécurité et de mise en service !

SIEMENS

ESPAÑOL

CE

Advertencias de seguridad y de puesta en marcha para motores asíncronos de baja tensión (según las Directrices para baja tensión 73/23/CEE)

1 Generalidades

Los motores eléctricos tienen piezas, peligrosas, bajo tensión y en movimiento así como posiblemente superficies a alta temperatura. Todos los trabajos de transporte, conexión, puesta en marcha y mantenimiento periódico han de ser realizados **por personal especializado y cualificado responsable** (observar VDE 0105; IEC 364). Un comportamiento inadecuado puede producir graves **lesiones y daños materiales**. Es necesario respetar **las normas y disposiciones vigentes nacionales, locales y específicas de la instalación**.

2 Utilización conforme

Estos motores están destinadas a instalaciones industriales. Cumplen con las normas armonizadas de la serie **EN60034 (VDE 0530)**. Está **prohibida** su aplicación **en recintos expuestos al peligro de explosiones (Ex)** a no ser que se hayan destinado **expresamente** a este efecto (observar las advertencias adicionales). Si en casos especiales, cuando se utilizan en recintos **no** industriales, se imponen exigencias de seguridad más severas (p. ej., protección contra contactos involuntarios con dedos de niño), la responsabilidad corre a cargo del instalador.
Los motores se han diseñado para temperaturas ambiente de **-20°C a +40°C** y una altura de instalación de hasta **1000** m.s.n.m. Es **imprescindible** observar los datos en la placa de características. Las condiciones en el lugar de emplazamiento deben coincidir con **todas** las indicaciones en dicha placa.

Los motores de baja tensión son **componentes** para incorporar en máquinas según la Directiva para máquinas 89/392/CEE. Está prohibida la **puesta en marcha** hasta tanto no se haya comprobado que el producto final cumple con dicha Directiva (observar EN 60204-1).

3 Transporte, almacenamiento

Los **daños** constatados después del suministro han de comunicarse inmediatamente a la agencia de transporte; en caso dado habrá que **impedir la puesta en marcha.** Apretar fuertemente los cáncamos utilizados para el transporte. Están diseñados para soportar el peso del motor por lo que no se ha de añadir ningún peso adicional. De ser necesario, utilizar medios de transporte idóneos (p. ej. guías de cable).
Los **seguros de transporte** habrán de retirarse antes de la puesta en marcha. Volver a utilizarlos para otros transportes. Si han de almacenarse los motores y para evitar daños de parada de los rodamientos, cuidar que el ambiente sea **seco, libre de polvo y con pocas vibraciones** ($v_{ef} \leq 0{,}2$ mm/s). El almacenamiento prolongado acorta la vida útil de la grasa de los rodamientos.
Antes de la puesta en marcha medir la resistencia del aislamiento. Si el valor es $\leq 1k\Omega$ por voltio de la tensión asignada, secar los devanados.

4 Instalación

Cuidar que la conformación de los cimientos, que la fijación de las patas y de las bridas sea óptima y que la alineación sea exacta en el caso de acoplamiento directo. Evitar las resonancias a la frecuencia simple o doble de rotación causadas por las condiciones de montaje.
Girar a **mano** el rotor y observar si se oyen ruidos de rozamiento anómalos. **Controlar la dirección de giro** en estado desacoplado (ver el apartado 5).
Calar o extraer los elementos de transmisión (polea, acoplamiento ...) sólo con el dispositivo adecuado (¡en caliente!) y cubrirlos con una protección contra contactos involuntarios. Tensar las correas a los valores prescritos (v. Catálogo, lista de datos técnicos).
En la superficie del eje o en la placa de características está indicado el **modo de equilibrado** (**H** = media chaveta, **F** = chaveta entera). Observar el modo de equilibrado al montar el elemento de transmisión. Si el equilibrado es con media chaveta, eliminar las partes visibles de la chaveta que sobresalen.

Tipo: **1LA, 1LB, 1LC, 1LD, 1LF, 1LG, 1LL, 1LN, 1LP, 1LS, 1LT, 1LV, 1PB, 1PF, 1PK, 1PP, 1PQ, 1PR**

Altura del eje: 56 ... 450 mm

En los modelos con el extremo del eje hacia abajo se recomienda un techo de protección; en los modelos con el extremo del eje hacia arriba **el usuario** deberá prever un recubrimiento para evitar que puedan penetrar cuerpos extraños en el ventilador.
¡No impedir la ventilación! Evitar la aspiración directa del aire expulsado, también la de máquinas vecinas.

5 Conexión eléctrica

Todos los trabajos deben ser realizados por **personal cualificado** en motores **parados,** que han sido **aislados** de la red y **asegurados contra la reconexión (condenado).** Esto rige también para los circuitos auxiliares (p. ej. la calefacción contra condensaciones).
¡Comprobar la ausencia de tensión!
Si se sobrepasan las **tolerancias** especificadas en **EN 60034, parte 1/IEC 34-1** (tensión ± 5%, frecuencia ± 2%, forma de onda, simetría) aumenta el calentamiento y disminuye la compatibilidad electromagnética. Observar los datos en la placa de características así como el esquema en la caja de conexiones.
Las conexiones se realizarán de forma que quede asegurada una conexión eléctrica **fiable y duradera** (nada de extremos de hilos al aire); usar terminales de cable adecuados. Unir a un conductor de protección.

Pares de apriete de las conexiones en la placa de bornes:

	∅ rosca	M4	M5	M6	M8	M10
	Par de apriete [Nm]	0,8...1,2	1,8...2,5	2,7...4	5,5...8	9...13

Distancias al aire de las partes sometidas a tensión entre elles y con relación a tierra ≥ 5,5 mm ($U_N \leq 690$ V).

En la caja de conexión **no deben haber** cuerpos extraños, suciedad ni humedad. Los pasacables que no se necesiten, así como la caja en sí, deberán sellarse de forma **hermética al polvo y al agua**.
Para marcha sin elementos de transmisión, asegurar la chaveta contra su desprendimiento accidental.
Comprobar el funcionamiento de los frenos antes de la puesta en marcha en los motores provistos de los mismos.

6 Servicio

Son despreciables las vibraciones $v_{ef} \leq 3{,}5$ mm/s ($P_N \leq 15$ kW) ó $v_{ef} \leq 4{,}5$ mm/s ($P_N > 15$ kW) en servicio con acoplamiento.
Si se observan divergencias durante el servicio respecto al servicio normal, p. ej. **temperatura elevada**, **ruidos**, **vibraciones**, deberá desconectarse el motor en caso de duda. Indagar la causa y en caso dado consultar con el fabricante. No dejar fuera de servicio, ni durante la marcha de prueba, los dispositivos de protección.
Limpiar los conductos de aire periódicamente si hay mucha suciedad.
Abrir de tanto en tanto los **orificios de purga del agua de condensado**.

Los motores **sin** dispositivo de reengrase deberán reengrasarse o se reemplazarán los rodamientos de acuerdo con las indicaciones del fabricante, a más tardar después de 3 años.
Los rodamientos **con** dispositivo de reengrase se reengrasarán con el motor en marcha. Observar la placa de reengrase.
En le caso de **motores con refrigeración separada**, el motoventilador debe estar en marcha durante el funcionamiento del motor.

7 Otras informaciones

¡Observar la información sobre dispositivos complementarios! Para más detalles ver nuestras extensas Instrucciones de servicio y mantenimiento (en alemán / inglés / francés / español / italiano / sueco). Con gusto se las enviaremos si nos indica el tipo y el número de su máquina.

¡Guardar estas advertencias de seguridad y de puesta en marcha!

SIEMENS

ITALIANO

CE

Avvertenze per la sicurezza e la messa in servizio di motori asincroni in bassa tensione
(conformemente alla direttiva per impianti impiegati in bassa tensione 73/23/CEE)

1 Generalità

Alcune parti dei motori elettrici sono pericolose in quanto in tensione o in movimento. Altrettanto vale per le superfici, che possono raggiungere temperature elevate. Tutte le operazioni di trasporto, collegamento, messa in servizio e manutenzione devono essere eseguite da **personale addestrato** (cfr. VDE 0105; IEC 364). La non osservanza di tali norme può **provocare gravi lesioni alle persone ed ingenti danni materiali**. Si raccomanda di rispettare i **regolamenti nazionali e locali** e di attenersi alle **istruzioni relative all'impianto**.

2 Uso appropriato

I motori sopraelencati sono destinati ad impianti industriali. Essi sono conformi alle norme armonizzate della serie **EN 60034 (VDE 0530)**. L'impiego in ambienti potenzialmente esplosivi non è consentito salvo dichiarazione contraria nelle istruzioni (cfr. avvertenze supplementari). Qualora il motore debba essere incorporato in impianti non industriali, è assolutamente necessario provvedere a misure di sicurezza supplementari (es. protezioni da contatti per bambini). Tali misure devono essere realizzate al momento dell'installazione.
I motori sono tarati per temperature ambiente tra **- 20°C e + 40°C** e per altitudini non superiori a **1000 m s.l.m.** Si raccomanda di osservare comunque i dati di targa ai quali devono corrispondere **tutte** le condizioni ambientali del luogo di installazione.

I motori a bassa tensione sono **componenti** da integrarsi in macchine ai sensi della direttiva CEE 89/392 relativa alle macchine. La **messa in servizio** non è consentita fin tanto che non è stata accertata la conformità del prodotto finale a detta direttiva (osservare EN 60204-1).

3 Trasporto, immagazzinaggio

Comunicare tempestivamente eventuali **danni** verificatisi durante il trasporto. In tal caso non procedere alla messa in servizio. Serrare i golfari di trasporto. Essi sono dimensionati solo per il peso del motore e non è pertanto consentito aumentare il carico. Ove necessario utilizzare mezzi di trasporto dimensionati per pesi superiori (es. funi). Prima di procedere alla messa in servizio **asportare** tutte le parti utilizzate per assicurare l'impianto durante il trasporto. Tali parti devono essere conservate per eventuali trasporti successivi. Qualora i motori vengano immagazinati, scegliere un luogo asciutto, privo di polveri e vibrazioni. ($v_{eff} \leq 0{,}2$ mm/s) onde evitare danni ai cuscinetti. Un periodo di immagazzinaggio prolungato comporta la diminuzione della durata del grasso.
Prima della messa in funzione misurare la resistenza d'isolamento. Con valori inferiori a 1kΩ per ogni Volt di tensione nominale asciugare gli avvolgimenti.

4 Installazione

Il motore deve essere installato su superficie piana. Accertarsi che i piedini o la flangia siano ben serrati e che, nel caso di giunto diretto, il motore sia perfettamente allineato.Evitare che si creino risonanze pari alla frequenza dei giri del motore o doppie della frequenza di rete. Far ruotare **manualmente** il rotore per verificare l'assenza di rumori di strisciamento. **Verificare il senso di rotazione** con giunto disinnestato (cfr. par. 5).
Calettare (estrarre) gli elementi condotti, es. puleggia per trasmissione a cinghia, giunto ecc., solo mediante dispositivi appositi (calettamento a caldo). Evitare tensioni non consentite sulla puleggia. (catalogo, distinta tecnica).
Il tipo di **equilibramento** è indicato sulla parte frontale dell'albero o sulla targhetta (**H** = mezza chiavetta; **F** = intera chiavetta). Montando gli elementi condotti prestare attenzione all'equilibratura! Nel caso di equilibratura a mezza chiavetta asportare le parti sporgenti visibili della chiavetta.
Nelle varianti costruttive con l'estremità dell'albero rivolta verso il basso si consiglia di applicare un tettuccio di protezione; se l'estremità dell'albero è rivolta verso l'alto applicare una copertura che eviti la penetrazione di corpi estranei nel ventilatore.

Tipo: **1LA, 1LB, 1LC, 1LD, 1LF, 1LG, 1LL, 1LN, 1LP, 1LS, 1LT, 1LV, 1PB, 1PF, 1PK, 1PP, 1PQ, 1PR**

Altezza asse: 56 ... 450 mm

Non ostacolare la ventilazione! L'aria scaricata, compresa quella proveniente da altri gruppi, non deve essere riaspirata subito.

5 Collegamento elettrico

Qualunque operazione sull'impianto deve essere affidata a **personale addestrato.** Il motore deve essere **disattivato e isolato. Assicurarsi che non sia possibile una reinserzione accidentale.** Detti provvedimenti hanno validità anche per quanto riguarda i circuiti ausiliari (es. scaldiglie).

Verificare l'assenza di tensione!

Il superamento dei valori di **tolleranza** indicati in **EN 60034, parte 1 / IEC 34-1** (tensione ±5%, frequenza ±2%, forma e simmetria della curva sinusoidale) comporta un aumento del riscaldamento e influenza la tolleranza elettromagnetica). Osservare i dati di targa e lo schema circuitale contenuto nella scatola collegamenti.
L'allacciamento deve essere effettuato in modo tale da garantire un collegamento elettrico duraturo e sicuro (evitare che vi siano estremità sporgenti di fili). **Effettuare collegamenti di protezione!**

Copie di serraggio per l'allacciamento delle morsettiere

	Filetto	M4	M5	M6	M8	M10
	Coppia di serraggio [Nm]	0,8...1,2	1,8...2,5	2,7...4	5,5...8	9...13

Traferi tra le parti nude in tensione e verso terra ≥ 5,5 mm ($U_N \leq 690$ V).

Nella scatola collegamenti non devono essere presenti nè corpi estranei, nè sporcizia o umidità. Chiudere i bocchettoni passacavi non utilizzati e la scatola stessa **a prova di penetrazione di polvere ed acqua.**
In funzionamento di prova senza elementi condotti **assicurare la chiavetta.**
Nel caso di motori dotati di freno, verificarne il funzionamento prima della messa in servizio.

6 Esercizio

Intensità di vibrazione nell'ordine di $v_{eff} \leq 3{,}5$ mm/s ($P_N \leq 15$ kW) o $v_{eff} \leq 4{,}5$ mm/s ($P_N > 15$ kW) con funzionamento senza giunto sono trascurabili.
Qualora si dovessero verificare anomalie rispetto all'esercizio normale **(aumento della temperatura, rumori, vibrazioni),** si raccomanda di disinserire il motore. Verificare la causa delle anomalie e interpellare eventualmente il costruttore. Non disinserire mai i dispositivi di protezione, nemmeno in funzionamento di prova.
Nel caso di forte sporcizia, pulire regolarmente le condutture di areazione. Aprire periodicamente i **fori per lo scarico della condensa!**

Nel caso di motori **senza dispositivi di ingrassaggio,** attenersi alle istruzioni del costruttore. Il reingrassaggio è da effettuarsi comunque al più tardi dopo 3 anni.
Nel caso di cuscinetti **con ingrassatore,** procedere all'ingrassaggio con motore funzionante. Attenersi alle indicazioni!
L'esercizio di **motori a ventilazione forzata è solo consentito con il ventilatore** esterno acceso.

7 Informazioni supplementari

Osservare le istruzioni relative ad eventuali dispositivi supplementari! Informazioni più dettagliate sono contenute nelle istruzioni per l'esercizio e la manutenzione (tedesco, inglese, francese, spagnolo, italiano, svedese). Tali istruzioni possono essere richieste indicando il tipo e il numero di matricola del motore.

Conservare con cura queste istruzioni!

SIEMENS

CE

SVENSKA

Säkerhets- och idrifttagningsanvisningar för lågspännings-asynkronmotorer

(enl. lågspänningsdirektivet 73/23/EEC)

Type: **1LA, 1LB, 1LC, 1LD, 1LF, 1LG, 1LL, 1LN, 1LP, 1LS, 1LT, 1LV, 1PB, 1PF, 1PK, 1PP, 1PQ, 1PR**

Axelhöjd: 56 ... 450 mm

1 Allmänt

Elmotorer har farliga, spänningsförande och roterande delar samt ev. heta ytor. Allt arbete i samband med transport, anslutning, idrifttagning och regelbundet underhåll måste utföras av **kvalificerade, ansvariga yrkesmän** (VDE 0150; IEC 364). Osakkunnig hantering kan medföra svåra **person-** och **materialskador.** Uppmärksamma gällande **svenska, lokala** och **anläggningsspecifika bestämmelser och krav.**

2 Avsedd användning

Dessa motorer är avsedda för yrkesmässig användning. De uppfyller kraven i de harmoniserade standardena i serien **EN60034 (VDE 0530)**. De får **inte användas i explosionshotade** utrymmen (Ex-områden) om de inte uttryckligen sägs vara avsedda för detta (se kompletterande anvisningar). Om speciellt skärpta krav ställs i något speciellt fall vid icke yrkesmässig användning - t.ex. krav på skydd mot beröring av barn - så skall användaren se till att dessa villkor uppfylls på installationsplatsen.

Motorerna är dimensionerade för omgivningstemperaturer **mellan -20°C och +40°C** och installationshöjder ≤ **1000 möh.** Om märksylten ger annan information, så ta ovillkorligen hänsyn till denna. Förhållandena på installationsplatsen måste i alla avseenden stämma med uppgifterna på märkskylten.

Lågspänningsmotorer är **komponenter** för montering i maskiner enligt maskindirektivet 89/392/EEC. De **får inte tas i drift** förrän överensstämmelse med detta direktiv har dokumenterats (beakta EN 60204-1).

3 Transport, förvaring

Underrätta omedelbart transportföretaget om motorn efter leveransen visar sig ha **skador;** ev. kan dessa **utesluta idrifttagning.** Dra åt de iskruvade transportöglorna ordentligt. De är dimensionerade för motorns vikt och får inte utsättas för ytterligare belastning. Använd lämplig transportutrustning när så behövs (t.ex. lyftselar).

Ta bort transportsäkringarna innan motorn sätts i drift. Sätt tillbaka dem igen om motorn skall flyttas. Motorerna kan förvaras i **torr och dammfri** omgivning **utan större vibrationer** (v_{eff} ≤ 0,2 mm/s) för undvikande av stilleståndskador på lagren. Vid längre förvaringstid reduceras lagerfettets livslängd.

Mät isolationsmotståndet före idrifttagningen. Vid värden ≤ 1KΩ per volt märkspänning skall lindningen torkas.

4 Installation

Montera motorn på ett jämnt underlag med pålitlig fastsättning av foten eller montageflänsen. Rikta upp axeln omsorgsfullt vid direkt påkoppling. Undvik installation som innebär resonans med trefasfrekvensen eller dubbla nätfrekvensen. Vrid rotorn **för hand** och lyssna efter skrapande ljud. Kontrollera **rotationsriktningen** innan motorn kopplas på det drivna systemet (se Avsnitt 5).

Drivdon (remskiva, koppling, etc.) skall dras på och tas av med lämpliga verktyg (uppvärmning) och förses med beröringsskydd. Undvik otillåtna remspänningar (se katalog, tekniska data)

Balanseringsstatus är angivet på axeltappens sidoyta (**H** = halv kil, **F** = hel kil). Ge akt på detta när drivdonet monteras. Vid balansering med halv kil skall den **utskjutande, synliga** delen av kilen slipas bort.

På modeller med axeltappen nedåt rekommenderas ett skyddstak och vid montering med axeltappen uppåt måste man **på installationsplatsen** bygga ett skydd, så att främmande partiklar inte kan falla in i fläkten.

Förhindra inte ventilationen! Frånluft får inte kunna sugas in igen, inte heller från intilliggande aggregat.

5 Elektrisk anslutning

Allt arbete skall utföras av **kvalificerade yrkesmän** med motorn **stillastående, frånkopplad och låst mot oavsiktlig återinkoppling.** Detta gäller även hjälpströmkretsar (t.ex. stilleståndsuppvärmning).

Kontrollera att anslutningen är spänningslös!

Om **toleranserna i EN 60034 del 1 / IEC 34-1** överskrids - dvs. spänning ±5%, frekvens ±2%, symmetrisk karakteristik - så överhettas motorn och vållar starkare elektromagnetiska störningar. Ta hänsyn till märkskyltens uppgifter och kopplingsschemat i uttagslådan.

Motorn måste anslutas så att en **varaktig** pålitlig elektrisk förbindelse erhålls (inga utstickande trådändar). Använd lämplig skoning på kabeländarna. Ordna pålitlig anslutning av **skyddsledare.**

Åtdragningsmoment för anslutning av plintarna

	Gängdiam.	M4	M5	M6	M8	M10
	Åtdragnings-moment [Nm]	0,8...1,2	1,8...2,5	2,7...4	5,5...8	9...13

Luftgap mellan blanka, spänningsförande delar sinsemellan samt mellan dessa delar och jord ≥ 5,5 mm (U_N ≤ 690 V) .

I uttagslådan får det inte förekomma främmande partiklar, smuts eller fukt. De kabelöppningar som ej används skall förseglas **damm- och vattentätt.**

Fixera axelkilen före provkörningen. På motorer med broms måste man kontrollera att bromsen fungerar innan motorn startas.

6 Drift

Vibrationer upp till v_{eff} ≤ 3,5 mm/s (P_N ≤ 15 kW) resp. v_{eff} ≤ 4,5 mm/s (P_N > 15 kW) kan godtas vid direkt påkoppling på axeln.

Stoppa motorn om avvikelser från normal drift iakttas - t.ex. **förhöjd temperatur, buller, vibrationer.** Fastställ orsaken och ta ev. kontakt med tillverkaren. Sätt inte skyddsanordningar ur funktion, inte heller vid provkörningen.

Rengör luftkanalerna regelbundet om miljön är starkt förorenad. Öppna **kondensvattenhålen** då och då!

I motorer **utan anordning för eftersmörjning** skall lager och fett bytas enligt tillverkarens uppgifter, dock senast efter 3 år. Lager **med eftersmörjningsanordning** skall eftersmörjas med motorn gående. Följ anvisningarna på märkskylten!
När en **motor har exern fläkt** måste denna vara inkopplad tillsammans med motorn.

7 Övrig information

Ge akt på information rörande eventuella tillsatser. Övriga uppgifter finns i våra utförliga drifts- och underhållsinstruktioner (TYSKA / ENGELSKA / FRANSKA / SPANSKA / ITALIENSKA / SVENSKA). De kan erhållas på begäran. Ange motortypen och maskinnumret.

Förvara dessa säkerhets- och driftsanvisningar för framtida bruk!

These operating instructions are binding for double change-over filters according to FLENDER works standard W 5921.

Function

Double change-over filters are designed for continuous filtration. Normally, only one filter chamber is in operation, the second filter chamber being held in reserve. As soon as the filter is clogged by increasing contamination (see indicator contamination), changeover takes place to the second filter chamber. Change-over of the liquid flow from one chamber to the other takes place without interrupting the actual liquid flow.

Startup

Before startup, the entire system should be flushed through. This ensures that possible contamination occuring during installation will not cause any malfunctions. Normally, the filter will be operated in single chamber mode. In case of extremely high viscosity (cold start at low oil temperatures and/or high initial impurity content), parallel operation of both filter chambers is advisable (switch-over lever in centre position). After completion of the startup phase, change over to single chamber mode. The shut-off filter element intended as backup in subsequent single chamber mode **must** be cleaned immediately after change-over to permit utilizing the full impurity collection capacity.

Cleaning

Increasing contamination of the filter is apparent from the contamination indicator. The filter element held in reserve should be filled (by slowly turning the switch-over lever, while at the same time opening the venting screw until oil emerges). The pressure of the shut-off filter element should be released by opening the venting screw and drained by unscrewing the drain plug. Afterwards, the filter chamber should be unscrewed and the filter element withdrawn. The filter element should be washed with fresh cleaning liquid, such as benzine or warmed diesel oil, and then blown through from the inside to the outside.

Diese technische Unterlage hat gesetzlichen Schutz (DIN 34)

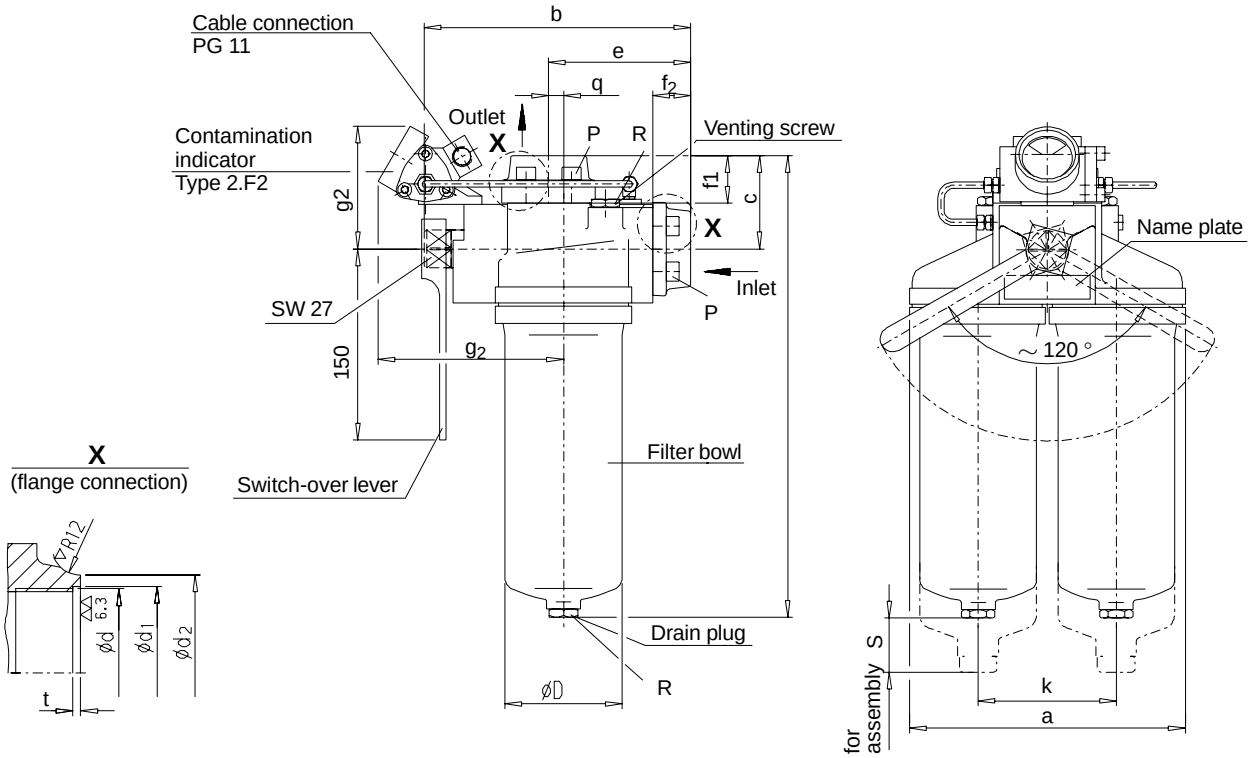

Nom. diam.	d	f_1	f_2	d_1	d_2	t
32	G 1 1/4	41	32	42.2	47.0	2.0
50	G2	45	36	61.0	74.0	3.0
80	-	50	41	81.0	89.0	-

Table 1: Flange connection dimensions

Nom. diam.	Flow rate V	Mesh area per filter element	Filter length	a	b	c	e	h	k	D	R	S	P	q	g_1	g_2	Weight	Mesh width 1)
	l/min	cm^2										~			~	~	kg	µm
32	150	1500	187	216	215	72	115	324	105	86	G 3/8	40	M 10	10	150	110	13	60 or 25
50	350	3500	267	260	247	88	134	435	130	110	G 1/2	40	M 12	9	160	130	20	60 or 25
80	900	9000	358	352	316	103	183	568	180	158	G 3/4	70	M 16	12	185	160	31	60 or 25

Table 2: Filter dimensions

1) The ”nominal” mesh width is determined by the smallest particle size of which 90 % is retained in the filter mesh.

Diese technische Unterlage hat gesetzlichen Schutz (DIN 34)

Technical Data

Operating pressure	:	max. 16 bar
Operating temperature	:	max. 120 °C
Oil flow velocity	:	max. 3 m/s
Contamination indicator	:	Type 2.F2 (differential pressure Δp 2 bar)

1 two-way contact

Electrical limit data (max. contact loading)

Switching voltage u $\leq$ 250 V DC + AC

Switching current I $\leq$ 1 A

Switching capacity P $\leq$ 30 W or $\leq$ 60 VA

Type of protection IP 65

Materials

Housing and switch-over element	:	GG-25		
Filter bowl	:	GK-AL		
Filter (cage mesh)	:	CrNi/Al		
Diaphragm	:	Perbunan		
O-rings	:	Perbunan		
O-ring dimensions	:	on filter chamber for DN	32:	85.09 x 5.33
			50:	104.14 x 5.33
			80:	148.59 x 5.33
		on inlet flange for DN	32:	37.47 x 5.33
			50:	59.69 x 5.33
			80:	85.09 x 5.33
		on outlet flange for DN	32:	40.87 x 3.53
			50:	63.09 x 3.53
			80:	91.67 x 3.53

Circuit diagram for contamination indicator

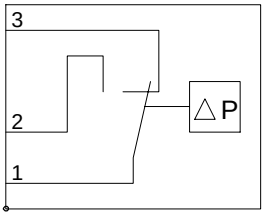

Diese technische Unterlage hat gesetzlichen Schutz (DIN 34)

Serck

MAINTENANCE MANUAL AM11/AM13 OIL COOLERS

1 TECHNICAL DATA

1.1 Nameplate

A nameplate is attached to the shell which specifies maximum operating conditions, part number and date of manufacture.

1.2 Thermal design data

The thermal performance differs for every heat exchanger. If required, the thermal performance of a particular heat exchanger can be supplied in the form of a data sheet.

1.3 Connections

Refer to drawing. (Appendix 1)

1.4 Construction

Refer to drawing. (Appendix 1)

2 CONSTRUCTION AND OPERATION

The cooler consists of a tubestack housed within an aluminium shell. The tubestack is made up of 8mm O.D tubes, with segmental baffles and fins. The tubes are bonded at each end into brass tubeplates.

The tubestack is assembled within the shell and sealed by '0' rings located within grooves in the tubeplates. Cast water boxes are bolted to the shell and sealed by '0' rings also located in grooves within the tubeplate.

The interspace between the '0' rings located in the shell and waterbox is bled to atmosphere which avoids any intermixing of the two fluids.

To ensure correct assembly of the tubestack within the shell, a location mark is incorporated in the tubeplate (see assembly drawing).

The waterboxes are designed to minimise turbulence and are fitted with plugs at each end to facilitate venting and draining. The water pipe connections are tapped B.S.P.

The shell is machined to house the tubestack and waterboxes. B.S.P. tapped connections are located at either end of the shell to provide the oil inlet and outlet.

Serck

Oil is guided over the fins and tubes by segmental baffles, the water flows through the tubes in counterflow to the oil flow.

3 SAFETY INSTRUCTIONS

- The permissible operating temperature and operating pressures specified on the nameplate may not be exceeded.
- No bolts on the heat exchanger may be loosened whilst the unit is under pressure.
- For some applications and in the case of malfunctions, the housing can heat up to such an extent that a risk of burns exists.

To avoid danger: Insulate the housing with thermal insulation and wear protective clothing.

4 TRANSPORT AND STORAGE

4.1 Transport

- Avoid damage to the cast shell, as difficulties may arise when withdrawing the tubestack.
- When handling the unpacked heat exchanger, proceed as follows: attach slings around the shell or where applicable, to the lifting points provided for the purpose.

4.2 Storage

Our heat exchangers are inhibited to give a shelf life of at least 12 months, provided they are stored under dry conditions.

5 INSTALLATION

The following points must be observed:

- Installation must be performed by specialist personnel.
- The foundation must be designed to take the weight of the heat exchanger.
- The supply pipelines must be laid in an isolated condition.
- Any cleaning openings or drain and ventilation connections must remain accessible.

Serck

6 COMMISSIONING

- Heat exchangers must remain unpressured for installation, both on the tube side and the shell side.

  The volume rates of flow of the two media must be adjusted to the values given in the thermal design data to ensure the correct operating conditions.

- When starting the heat exchanger with a viscous fluid, high pressure can develop temporarily. Therefore, in some cases it is advisable to provide a bypass regulator for cold starts.

7 MAINTENANCE AND CLEANING

Dismantling

1 Unbolt the water boxes from the cylinder and carefully remove the '0' rings exposed at each end of the tubestack.

2 Note the position of the tubestack location mark on the tubeplate.

3 Push the tubestack a little way out of the cylinder to expose one '0' ring. Remove the '0' ring.

4 Push the tubestack in the other direction to expose the other '0' ring. Slide the tubestack out of the cylinder.

Cleaning

The cooler should be removed and cleaned at overhaul periods, as a normal practice. If, however, due to faulty filtration for instance, there is a reduction of oil circulation, remove and examine the cooler to ensure that it is not fouled on the oil side.

Oil side: Usually, immersion in a paraffin (solvent, detergent or alkaline) degreasing tank is sufficient to remove all traces of dirty oil from the shell and tubestack.

When stubborn carbon deposits are difficult to remove in this manner, the tubestack should be immersed in a bath of detergent, preferably heated (except in the case of vapour solvents) and moved vigorously to and fro to achieve a sluicing action.

On no account use stiff metal brushes or probes which may damage the tubes and flow guide plates.

NOTE: DO NOT USE ALKALINE CLEANING SOLUTIONS FOR THE ALUMINIUM SHELL

Serck

Water side: If hard or impure water is used, the cooler may become blocked by hard scale or foreign matter.

A badly scaled cooler can be restored to its original cleanliness by immersing the tubestack in a suitable inhibited acid solution, the stack having first been thoroughly cleansed on the oil side.

For removal of hard scale suitable solvents should be obtained from a reputable metal cleaning specialist and used according to their instructions.

ASSEMBLY

NOTE: **Make certain that all components are clean before commencing assembly. Particular attention should be paid to the cylinder bore and to the '0' ring grooves.**

1 We advise the use of new joints when the cooler is re-assembled.

2 Insert tubestack into the cylinder without the '0' rings fitted. Continue insertion until the second '0' ring groove is fully exposed at the opposite end.

3 The tubestack location mark should line up with the oil port on the cylinder.

4 Fit greased '0' ring into exposed groove .

5 Push the tubestack back into the cylinder to just expose this second groove at the other end.

6 Fit greased '0' ring into groove and push tubestack back into cylinder.

NOTE: **On no account should the '0' ring pass the oil ports.**

7 Fit remaining '0' rings, followed by waterboxes, replace nuts and bolts.

Test the cooler on either the oil side or the water side using air at 4 bar, with the cooler immersed in water.

Serck

8 FAULT RECTIFICATION

SYMPTOM	POSSIBLE CAUSE	REMEDY
Required cooling performance is not achieved.	The actual flow volume on the tube side/cylinder side does not correspond with the design date.	Increase flow volume on the tube side/shell side.
	The actual temperatures are higher/lower than assumed in the design.	Consult our technical office.
	Media used are different to those assumed in the design.	Consult our technical office.
	The tube bundle is contaminated on the cylinder side/tube side.	Clean the tubestack on the shell side/tube side.
The two media mix.	A cooler/heater tube is leaking.	Seal both ends of the leaking tube with stoppers. Have the tubestack repaired.
	A tube-to-tube plate joint is leaking.	Replace the tubestack.

9 REPLACEMENT PARTS

For part designations, refer to sectional drawing.

When making enquiries about replacement parts, always specify the Serck part number.

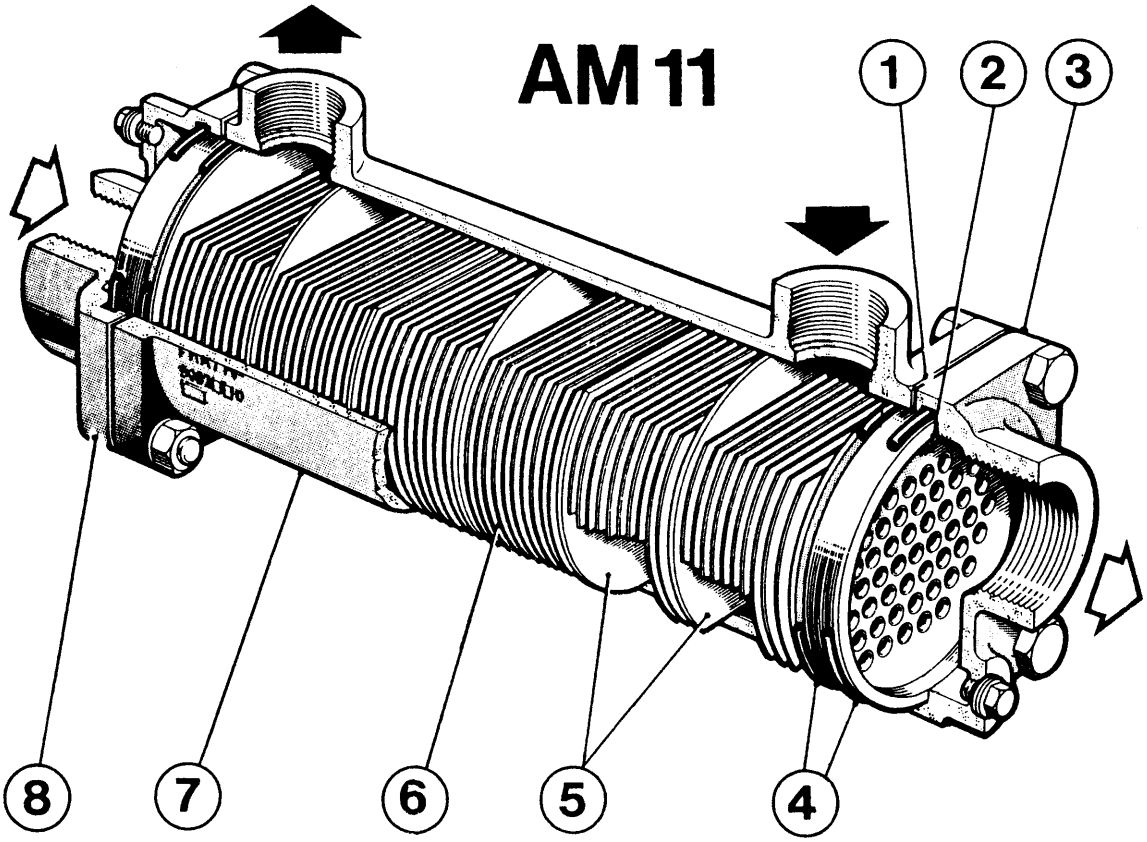

1. **Leakage Gap**
   Mise à l'atmosphère
   Leckagespalt

2. **Stack Location Indicator**
   Indicateur de position du faisceau
   Rohrbündelfixierungsmarke

3. **Water Box**
   Boite à eau
   Wasserkammer

4. **'O' Ring Joints**
   Joints toriques
   O – Ringdichtungen

5. **Baffles**
   Chicanes
   Umlenkbleche

6. **Fins**
   Ailettes
   Lamellen

7. **Cylinder**
   Cylindre
   Zylinder

8. **Water Box**
   Boite à eau
   Wasserkammer

Water Eau Wasser — Oil Huile Öl

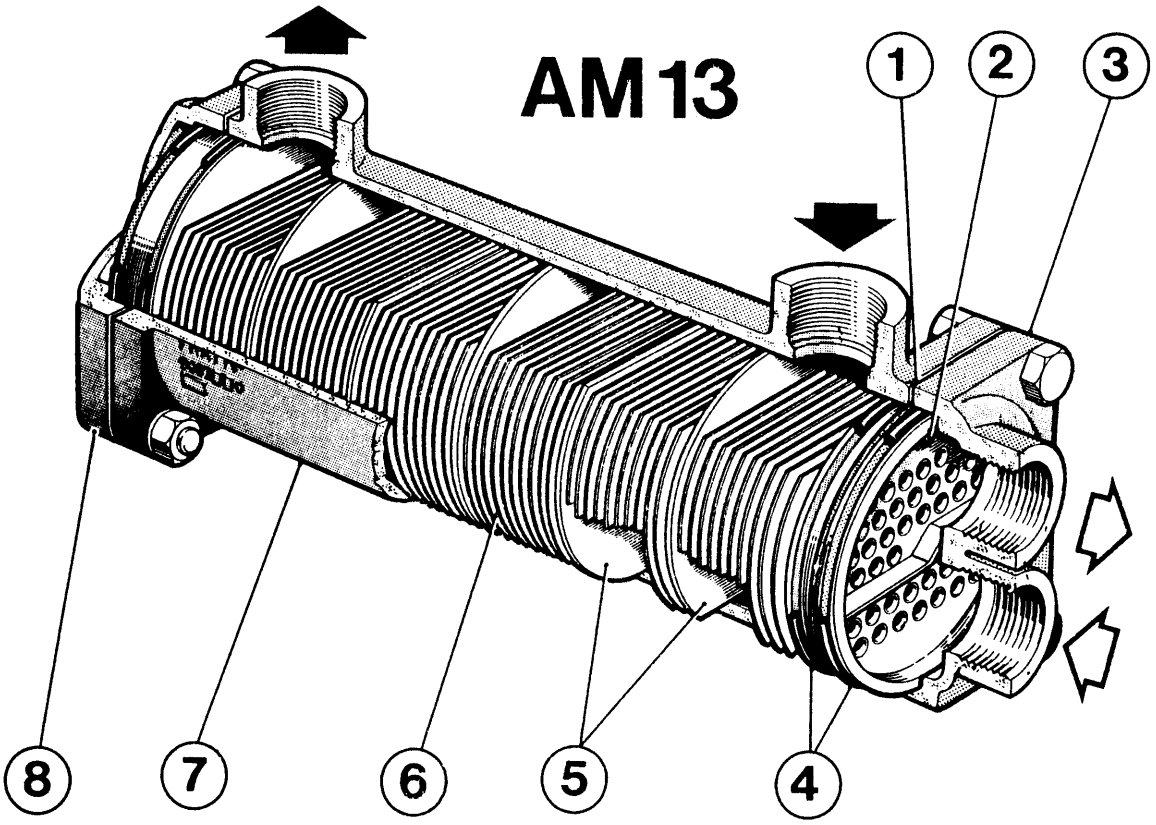

Dimensions in mm

These operating instructions are binding for non-return valves according to Flender works standard W 5916.

Installation

The non-return valves should be installed in such a way, that the flow direction corresponds to the arrow on the housing. Only a correct installation prevents an oil return. The non-return valves concerned are maintenance-free and can be used for mineral oil, synthetic oil and for water. Alternatively, a horizontal or a vertical installation is possible. The non-return valves are factory set.

The customer is **not** allowed to carry out an additional opening pressure setting.

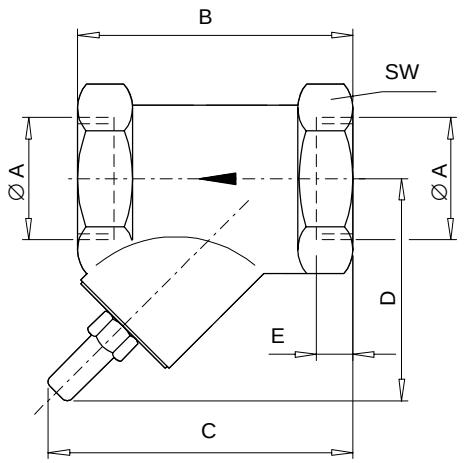

Nominal pressure PN (bar)	**Tube connection** A	B	C	D	E	SW	**Weight** (kg)
16	G 1/2	65	72	45	15.0	27	0.23
	G 1	90	113	76	19.1	41	0.61
	G 1 1/2	120	135	88	21.4	55	1.18
	G 2	150	168	114	25.7	70	2.18

Material: Housing: MS-chromium-plated (dull)
Seal: Viton

max. permissible temperature: 130 °C

Diese technische Unterlage hat gesetzlichen Schutz (DIN 34)

Dimensions in mm

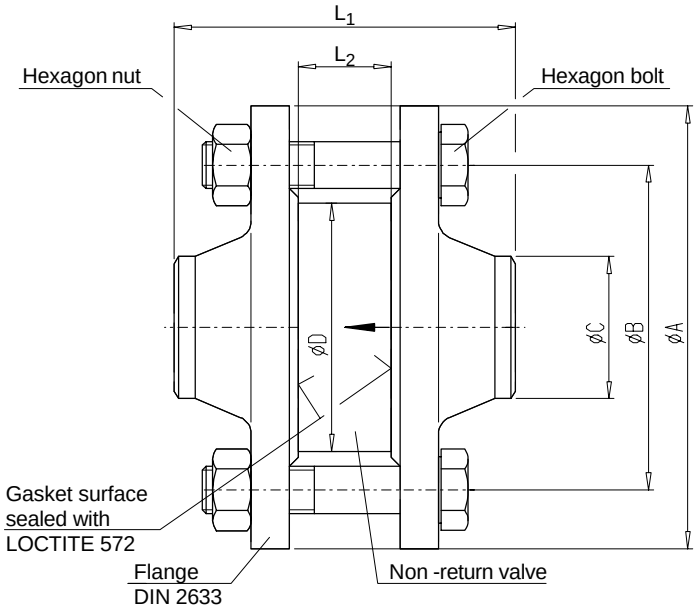

Nominal pressure PN (bar)	Nominal width DN	Hexagon bolt	Number	Attachment dimensions						Weight compl. (kg)
				A	B	C	D	L_1	L_2	
16	40	M16 x 90	4	150	110	48.3	84	115.5	31.5	4.9
	50	M16 x 100	4	165	125	60.3	97	130.0	40.0	6.7
	65	M16 x 110	4	185	145	76.1	117	136.0	46.0	8.2
	80	M16 x 120	8	200	160	88.9	132	150.0	50.0	10.6
	100	M16 x 130	8	220	180	114.3	152	164.0	60.0	13.6
	125	M16 x 160	8	250	210	139.7	184	200.0	90.0	21.7
	150	M20 x 180	8	285	240	168.3	209	216.0	106.0	28.2
	200	M20 x 220	12	340	295	219.1	264	264.0	140.0	50.6

Material: Housing: for DN 40 - 100 : G - CuSN 10
for DN 125 - 200 : GG - 25
Seal: : Viton

max. permissible temperature range: - 25 up to + 200 °C

Diese technische Unterlage hat gesetzlichen Schutz (DIN 34)

Pressure gauges to Flender Works Standard W 5914 are precision instruments for monitoring pressures visually.

General

A tube spring is fastened to a spring holder (screw-on tube). The medium to be measured enters the interior of the spring through the hole in the tube. When the pressure changes, the free end of the spring moves. This movement is transmitted through the pointer mechanism to the pointer and is shown on the dial plate as a pressure value.

The pressure gauges are used solely for visual monitoring.

Technical data

		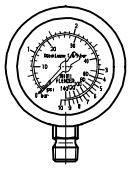	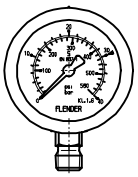	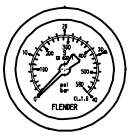	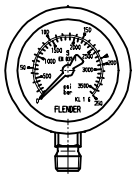	
Indicating range	Scale	Double scale				
	Outside (black)	0 ... 10 bar	0 ... 40 bar	0 ... 40 bar	0 ... 250 bar	0 ... 400 bar
	Inside (red)	0 ... 140 psi	0 ... 580 psi	0 ... 580 psi	0 ... 3625 psi	0 ... 5800 psi
Connection		bottom	bottom	centre rear	bottom	centre rear
Damping fluid		GL98				
Permiss. ambient temperature		-34 ... +100 °C				
Permiss. medium temperature		+100 °C				
Dial graduation		≤ 3 bar 0.1 linear > 3 bar 0.5 Class 1.6 ... 3 bar Class 4 from 3 ... 10 bar	≤ 40 bar 2.0 linear Class 1.6...40 bar	≤ 40 bar 2.0 linear Class 1.6...40 bar	≤ 250 bar 10 linear Class 1.6...40 bar	≤ 400 bar 20 linear Class 1.6...40 bar
Range of application		Dead load: 3/4 x full-scale value Alternating load: 2/3 x full-scale value short-time: full-scale value				
Inspection glass		Polycarbonate (PC)				
Threaded connection		R 1/4	G 1/4			
Type of protection		IP 65				
Material		Stainless steel				
Weight		0.21 kg				

Diese technische Unterlage hat gesetzlichen Schutz (DIN 34)

Bimetallic dial thermometers according to FLENDER works standard W 5924 are precision instruments for visual temperature monitoring of liquid and gaseous media.

Dimension drawing

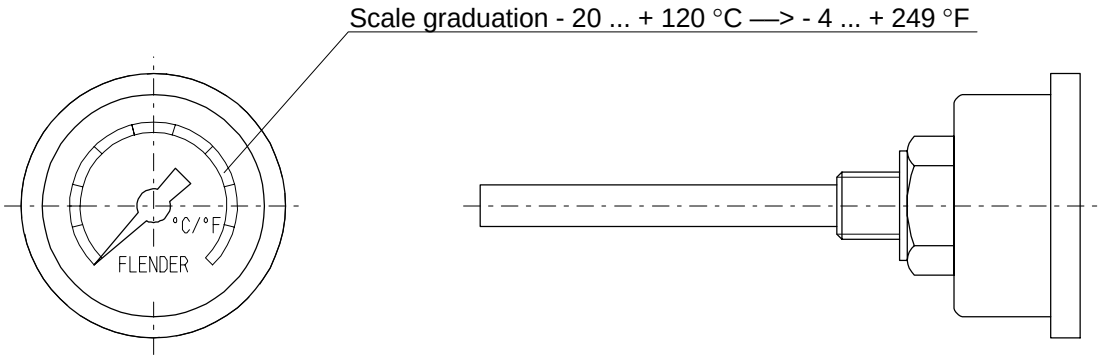

Design

Material:	Compl. stainless steel (CrNiSt)
Indicating range:	- 20 ... + 120 °C
Dial face:	Double scale, outer -20 ... +120 °C black inner -4 ... +249 °F red
Damping liquid:	bis(2-ethylhexyl)-adipate for synthesis (GC>98%)
Max. admissible ambient temperature:	- 35 °C
Inspection glass:	acrylic glass (PMMA)
Precision of indication:	Class 1.5 acc. to DIN 16 203
Scale graduation:	°C = 2° °F = 5°

Installation

When installing the thermometer take care that the immersion tube is dipped into the medium to be monitored.

Diese technische Unterlage hat gesetzlichen Schutz (DIN 34)

These Operating Instructions are binding for volume flow meters to Flender Works Standard W 5927.

General

The volume flow meter described here works in accordance with the orifice plate measuring system, using the Witte orifice plate, by which measurements from Reynold's number Re_{min} = 50 to $Re_{max.}$ 2320 can be carried out virtually independently of viscosity. Measurement requires an even flow of 8 x pipe inner diameter upstream and 5 x pipe inner diameter downstream of the orifice plate (undisturbed straight length of pipe). The meter can be mounted in any position. Calibration for vertical mounting is done at the works.

The volume flow meter is available in two versions:

Variant A: With indicator scale and two contacts (changeover contacts).

Variant B: Without indicator scale and with analog output signal.
This analog signal is in linear proportion to the differential pressure and in quadratic proportion to the volume flow.

Operation and construction

In the position of equilibrium the spring forces on both sides of the diaphragm are in balance. The differential pressure to be measured causes a force to be exerted on one side of the diaphragm. This force shifts the diaphragm system against the measuring range spring until it is in balance with the spring forces. If overload occurs, the diaphragm is supported against metal contact surfaces.
In the case of variant A a centrally located tappet transmits the movement of the diaphragm system to the dial train and the actuating elements of the micro-switches.
In the case of variant B a pressure transducer converts the differential pressure into a 4 - 20 mA signal. This analog signal is in linear proportion to the differential pressure and in quadratic proportion to the volume flow.

Section

1. Pressure chamber
2. Dial train (variant A only)
3. Tappet (variant A only)
4. Micro-switch actuating elements (variant A only)
5. Measuring springs
6. Measuring diaphragm

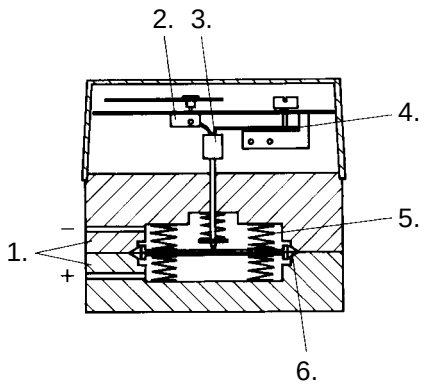

Diese technische Unterlage hat gesetzlichen Schutz (DIN 34)

Variant A: With indicator scale and two contacts (changeover contacts)

Technical data

Operating pressure:	max. 16 bar
Operating temperature:	- 10 ... + 90 °C (operating temperature)
permiss. ambient temperature:	- 40 °C (storage temperature)
Measurement accuracy:	~ ± 2.5 % of the full-scale reading
Scaling:	0 ... 100 %
Switching hysteresis:	~ 2,5 %
max. switching capacity:	5 A / 250 V AC / 500 VA (a.c. voltage) 0.4 A / 30 V DC / 25 W (d.c. voltage)
Type of protection:	IP 65
Output:	2 changeover contacts (separately adjustable)

Connection diagram

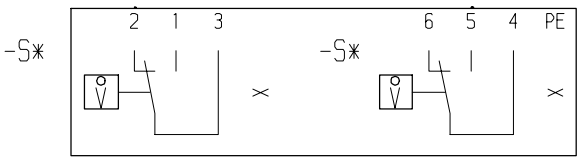

Material

Membranes:	Viton
Measuring-device base:	GGG-40
Shield:	St
Pressure chamber:	Aluminium anodized (black)
Cover:	plastic, very strong

Example: With a max. pump output of 112 l/min a volume flow meter with a volume flow range of up to 155 l/min can be used.

155 l/min % ⇒ 100 %
112 l/min % ⇒ 72 %

Design: A volume flow meter must be selected to the maximum value of the volume flow range of which the max. pump output comes as near as possible.

Diese technische Unterlage hat gesetzlichen Schutz (DIN 34)

Determining the volume flow (throughput)

e.g. volume flow range of up to 280 l/min (see sign on unit)

Pointer deflection 80 % => $\frac{280 \text{ l/min x Pointer deflection \%}}{100 \text{ \%}} = \frac{280 \text{ l/min x } 80}{100} = 224 \text{ l/min}$

Volume flow meter top section

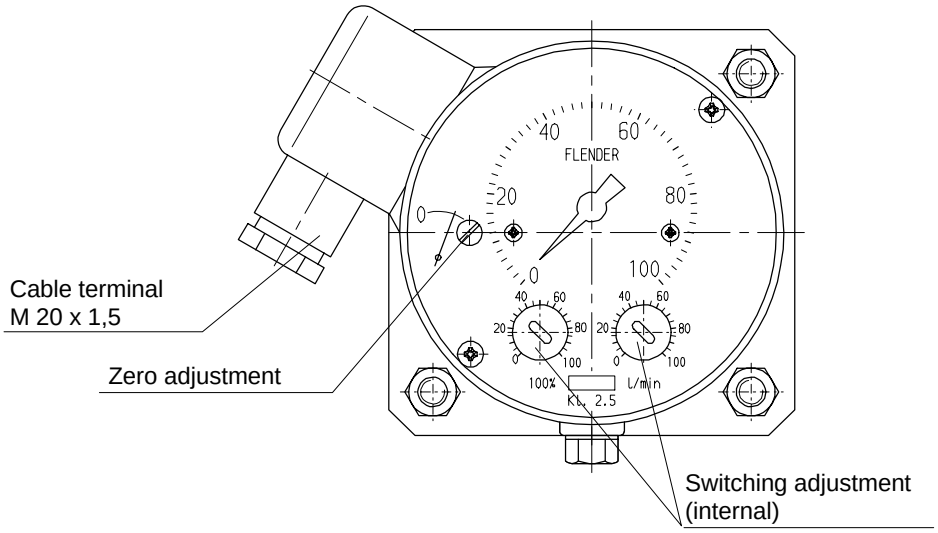

In the case of use in an explosion hazard area the flow monitor can be made intrinsically safe by means of a break relay (see example).

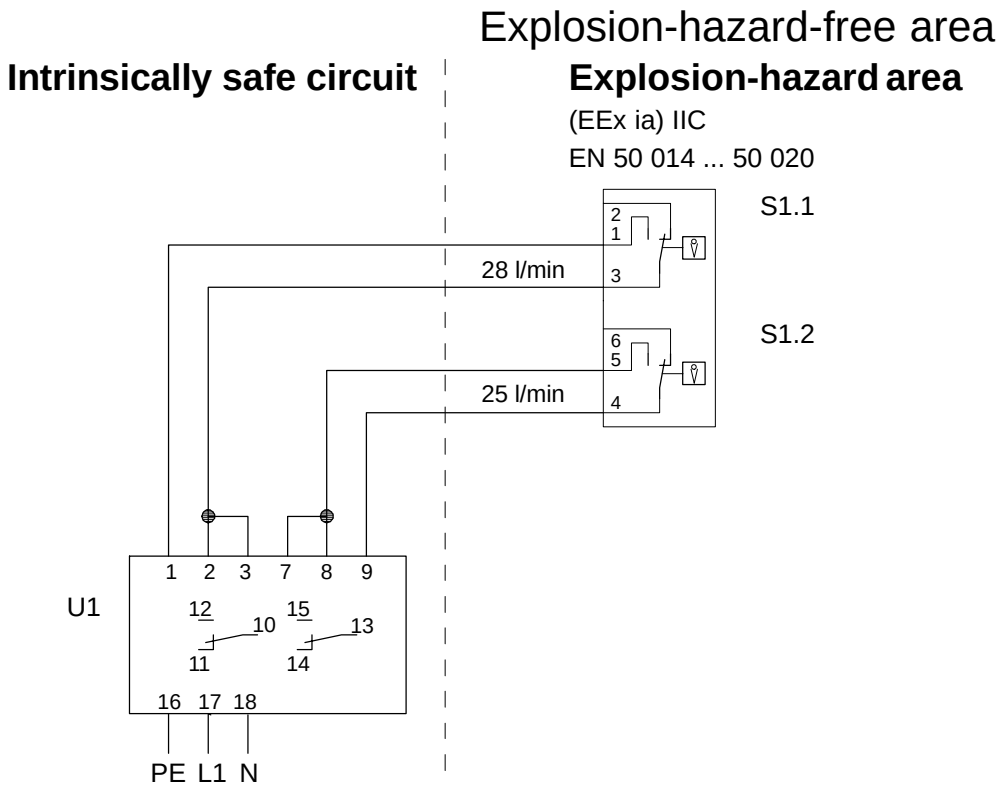

Variant B: Without indicator scale and with analog output signal (not suitable for explosion-hazard-area)

Technical data

Operating pressure:	max. 25 bar
Operating temperature:	- 10 ... + 70 °C (operating temperature)
permiss. ambient temperature:	- 30 °C (storage temperature)
Linearity:	< 2 % of full-scale reading
Signal scaling:	0 ... 100 %
Switching hysteresis:	< 1 % of full-scale reading
Signal type:	analog 4 - 20 mA (not linear); 24 V DC
Type of protection:	IP 54

Connection diagram (two-wire connection)

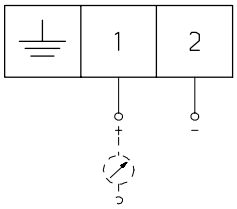

Material

Membranes:	Viton
Measuring-device base:	GGG-40
Shield:	St
Pressure chamber:	Aluminium anodized (black)
Cover:	plastic, very strong

Diese technische Unterlage hat gesetzlichen Schutz (DIN 34)

Example: The 4 - 20 mA signal scaling ranges from 0 to 100 %. With a max. pump output of 112 l/min a volume flow meter with a volume flow range of up to 155 l/min can be used.

155 l/min	=>	100 %	=>	20 mA
112 l/min	=>	72,3%	=>	12,35 mA
100,8 l/min	=>	65 %	=>	10,76 mA
77,5 l/min	=>	50 %	=>	8 mA
0 l/min	=>	0 %	=>	4 mA

Design: This means that, when the pump is at full output, the output signal is 12.35 mA. If this pump is running at only 90 % of its max. output (=100.8 l/min), the output signal is 10.76 mA.

Output signal: Output signal = 4 mA + 16 mA x $(Q_{ist} / Q_{100\%})^2$

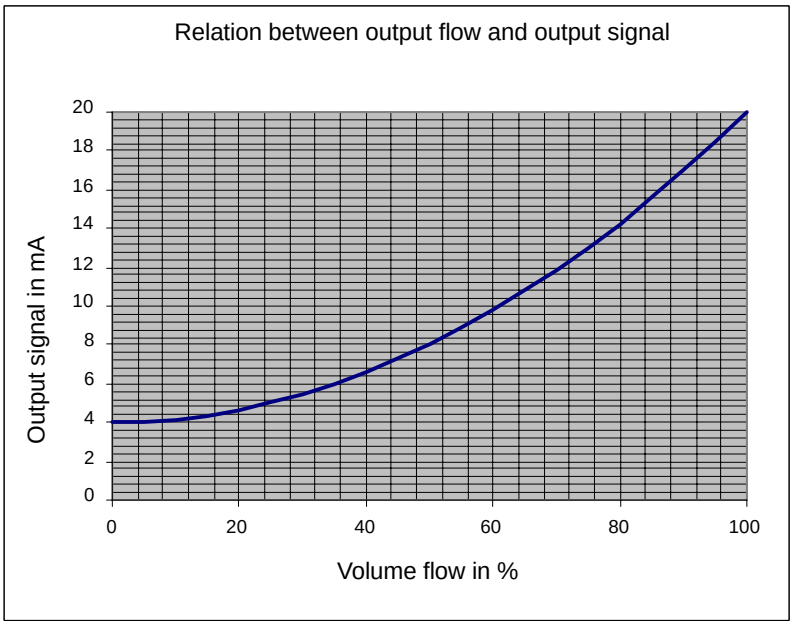

Volume flow meter top section

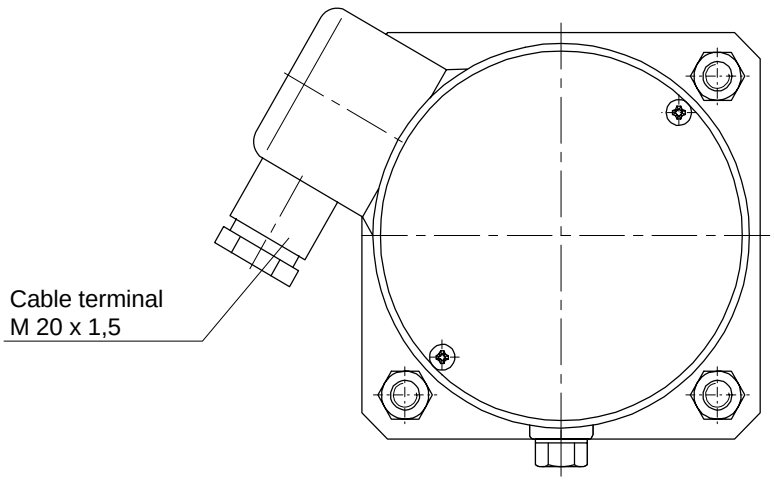

Diese technische Unterlage hat gesetzlichen Schutz (DIN 34)

INSTRUCTIONS

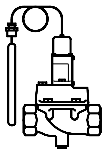

WVTS

016R9557

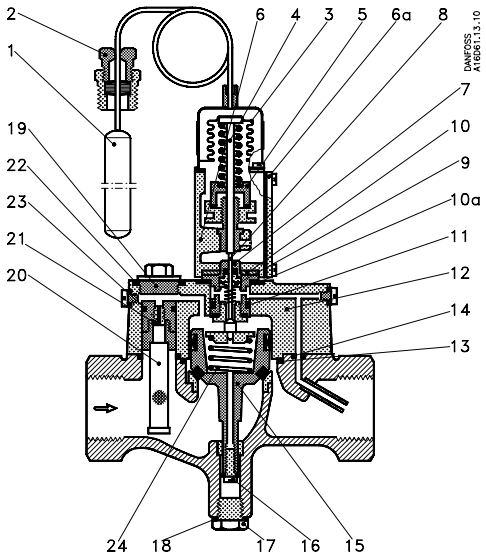

Fig. 1. WVTS 40

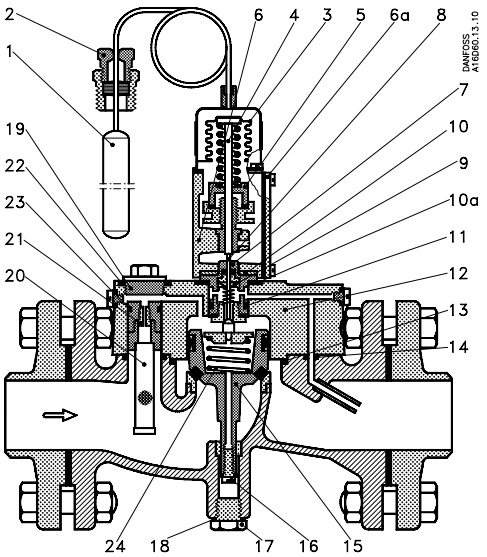

Fig. 2. WVTS 50-100

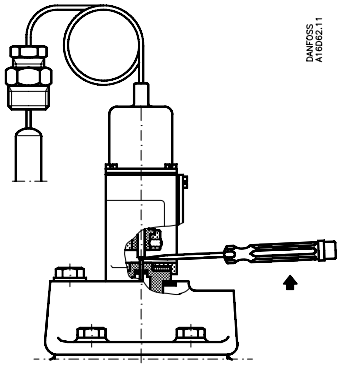

Fig. 4

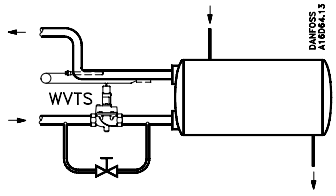

Fig. 3

Type	Fjeder/Spring/Feder/Ressort 1 - 10 bar (100 - 1000 kPa)
WVTS 32	**016D1327**
WVTS 40	**016D0575**
WVTS 50	**016D0576**
WVTS 65	**016D0577**
WVTS 80	**016D0578**
WVTS 100	**016D0579**

Fig. 5

DANSK

Termostatiske vandventiler

Tekniske data

1. Føler
2. Pakdåse
3. Bælgelement
4. Trykstang
5. Reguleringsmøtrik
6. Indstillingshus

6a. Dæksel

7. Pilotindsats
8. Pilotkegle
9. Teflonmanchetter
10. Isolationsskive

10a. Pakning for pilotindsats

11. O-ring for pilotindsats
12. Dæksel
13. O-ring for dæksel *
14. O-ring for pilotkanal
15. Servostempel *
16. Bundskrue for servostempel
17. Bundprop
18. Pakning for bundprop
19. Komplet filterindsats *
20. Selvrensende filter
21. Pilotdyse
22. Pakning
23. O-ring
24. Servofjeder **

* Angiv ventilstørrelsen.
** Se tabellen fig. 5.

Maks. prøvningstryk
16 ato (P_e = 16 bar = 1600 kPa).

Åbningsdifferenstryk
WVTS 32-40: min. 0.5 at (0.5 bar = 50 kPa); maks. 4 at (4 bar = 400 kPa).
WVTS 50-100: min. 0.3 at (0.3 bar = 30 kPa); maks. 4 at (4 bar = 400 kPa).
Hvis WVTS ønskes med et differenstryk på 1 - 10 at (1 - 10 bar, 100 - 1000 kPa), udskiftes servofjederen (24). Se bestillingstabellen, fig. 5.

Tilladelig medietemperatur
For vand: maks. +90°C
For brine: min. –25°C.

Maks. følertemperatur
57°C for området –15°C til +10°C og 0°C til + 30°C.
* 90°C for området +25°C til +65°C.

Montering

WVTS monteres i kølevandstilgangen med gennemstrømning i pilens retning og med bælgelementet opad. Det anbefales at montere et smudsfilter foran ventilen.
Føleren anbringes, hvor den ønskede vandtemperatur skal overholdes.
Føleren kan uden indvirkning på reguleringsevnen anbringes varmere eller koldere end ventilhuset.
For ventiler med området –15°C til +10°C kan føleren monteres i vilkårlig stilling.
For ventiler med de øvrige områder skal føleren monteres vandret eller med følerens frie ende lavest.
Bogstaverne UP og den røde streg på føleren skal vende opad ved vandret eller skrå montering.
På kondensatorer (fig. 3) kan føleren enten fastgøres til afgangsrøret med spændebånd, monteres i en følerlomme i afgangsrøret eller anbringes i direkte kontakt med kølevandet.
Ved anlæggets start skal føleren straks kunne påvirkes af det strømmende kølevands temperaturvariationer. Derfor kan et omløb med en afspærringsventil være nødvendigt for at sikre en kølevandsstrøm under opstart.
Monteres føleren i direkte kontakt med kølevandet, fastgøres den, så pulsationer ikke kan påvirke føleren og derved ødelægge kapillarrøret.
Anvendes følerlomme, opnås en god varmeovergang, når lommen fyldes med kobberpasta.
På luftkompressorer og lignende monteres føleren i den vandfyldte kølekappe. Et omløb er ikke nødvendigt her. Opvarmningen af vandet ved kompressorens start giver altid tilstrækkelig impuls til føleren.

Indstilling

Anbring et termometer på det sted, hvor føleren er placeret.
Fjern dækslet (6a). Med reguleringsmøtrikken (5) reguleres mediets gennemstrømning, indtil termometeret viser den ønskede temperatur på afgangssiden.

© Danfoss A/S

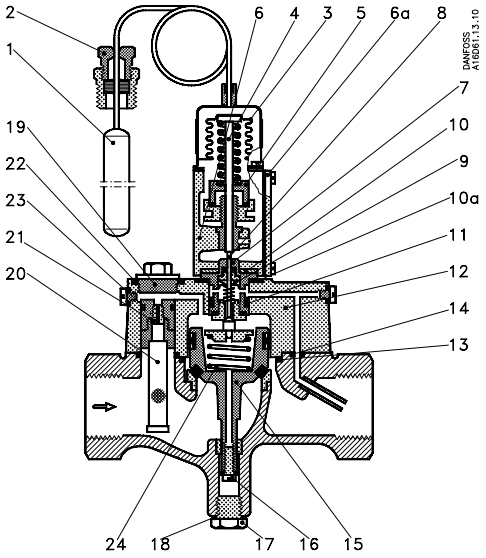

Fig. 1. WVTS 40

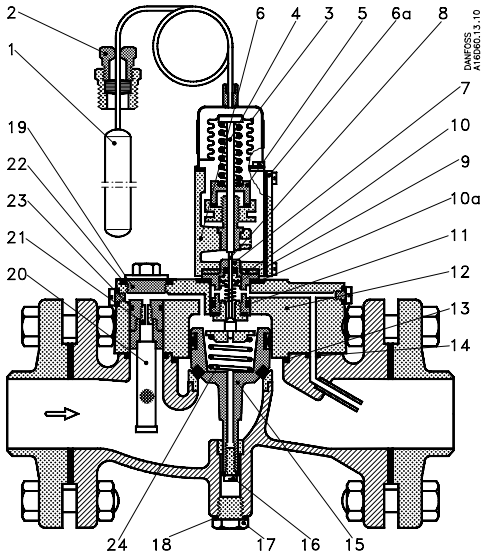

Fig. 2. WVTS 50-100

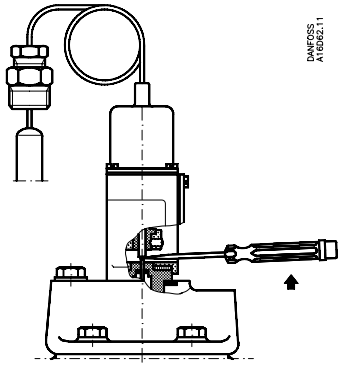

Fig. 4

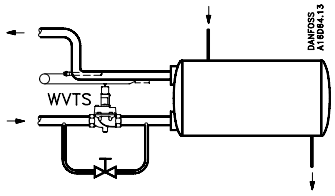

Fig. 3

Type	Fjeder/Spring/Feder/Ressort 1 - 10 bar (100 - 1000 kPa)
WVTS 32	**016D1327**
WVTS 40	**016D0575**
WVTS 50	**016D0576**
WVTS 65	**016D0577**
WVTS 80	**016D0578**
WVTS 100	**016D0579**

Fig. 5

Lavere temperatur opnås ved at dreje reguleringsmøtrikken (5) mod venstre (reguleringsfjederen slækkes) – og omvendt.
Når køleanlægget stopper, falder temperaturen ved føleren, og WVTS vil derfor lukke.

Service
Vandventilen skal lukke tæt for kølevandet, når køleanlægget er stoppet. Hvis den ikke gør det, kan årsagen muligvis være, at større snavspartikler har sat sig fast på servostemplets eller pilotkeglens ventilsæde. Måske er filteret (20) eller pilotdysen (21) tilstoppet.
Snavspartikler kan man forsøge at fjerne som vist på fig. 4. Stik en skruetrækker ind mellem pilotkeglens spindel (8) og trykstangen (4). Når skruetrækkeren vippes, presses pilotkeglen nedad, og ventilen åbner for fuld kølevandsgennemstrømning gennem ventilen.
Hvis vandventilen stadig ikke lukker tæt luk da for kølevandet til vandventilen. Skru filterindsatsen (19) af, og rens både filteret og pilotdysen.
Er filteret eller pilotdysen ikke tilstoppet afmontér topstykket (6) og ventildækslet (12). Topstykket og ventildækslet kan afmonteres, uden at det er nødvendigt at tage trykket af anlægget. Tag pilotindsatsen ud af ventildækslet, rens den og smør den ind i vandfast syrefrit fedtstof. Fyld rummet over teflonmanchetterne (9) med samme fedtstof. Måske er det nødvendigt at indslibe pilotkeglen i pilotsædet.
Rens servostemplet og ventilsædet og smør servocylinderen og servostemplets styr med vandfast, syrefrit fedtstof.
Pilotkanalerne i ventildækslet kan renses efter at skruerne i ventildækslets sider er fjernet.
Undersøg om O-ringene trænger til at skiftes ud.
Efter monteringen eller efter et eftersyn skal vandventilen skylles kraftigt igennem i nogle minutter for at fjerne evt. snavs fra rørledninger m.v. Se fig. 4.
Er der fare for frostsprængning af ventilen i stilstandsperioder, bør den tømmes for vand. Det gøres ved at fjerne bundproppen (17) og skruen (16).

ENGLISH

Thermostatic Water Valves
Technical data
1. Bulb
2. Stuffing box
3. Bellows element
4. Push rod
5. Regulating nut
6. Top part
6a. Cover
7. Pilot insert
8. Pilot cone
9. Teflon sleeves
10. Insulating disc
10a. Pilot insert seal
11. Pilot insert O-ring
12. Cover
13. O-ring for cover
14. O-ring for pilot channel
15. Servo piston *
16. Servo piston button screw
17. Drain plug
18. Drain plug gasket
19. Strainer assembly, complete *
20. Self-cleaning strainer
21. Pilot nozzle
22. Gasket
23. O-ring
24. Servo spring **

* Please state valve size.
** See table Fig. 5.

Max. test pressure

16 atm.g (p_e = 16 bar = 1600 kPa).

Opening differential pressure
WVTS 32-40: Min. 0.5 atm. (0.5 bar = 50 kPa)
Max. 4 atm. (4 bar = 400 kPa).
WVTS 50-100: Min. 0.3 atm. (0.3 bar = 30 kPa)
Max. 4 atm. (4 bar = 400 kPa).

If WVTS is required with a differential pressure of 1 - 10 atm. (1 - 10 bar; 100 - 1000 kPa), the servo spring (24) is to be replaced. See ordering table, Fig. 5.

Permissible temperature of medium
For water: Max. +90°C
For brine: Min. –25°C

Max. bulb temperature
57°C for the ranges of –15°C to +10°C and 0°C to +30°C.
90°C for the range of +25°C to +65°C.

Fitting
WVTS is to be fitted in the cooling water inlet with flow in the direction of the arrow and with the bellows element facing upwards.
It is recommended that a strainer should be inserted before the valve.
The bulb is to be fitted where it is required to maintain or control the water temperature.
The bulb can be fitted warmer or colder than the valve body, with no effect on the regulating capacity.
For valves in the range from –15°C to +10°C the bulb can be fitted in any position.
For valves with other ranges the bulb must be fitted horizontally or with the blank end of the bulb at the lowest level.
The capitals UP and the red line on the bulb must face upwards at horizontal or inclined fitting.
On condensers (Fig. 3) the bulb can either be fixed to the discharge pipe by means of a clip, be inserted in a pocket or placed in direct contact with the cooling water.
When the plant is started, the bulb must be affected at once by the temperature variations of the cooling water flow. A bypass with a shut-off valve can, therefore, be necessary in order to ensure a cooling water flow during start-up.
If the bulb is fitted in direct contact with the cooling water, it must be fixed so that pulsations cannot affect the bulb and thus destroy the capillary tube. If a bulb pocket is used, good heat transmission is obtained by filling the pocket with heat-conductive compound.
On air compressors and similar equipment the bulb is fitted in the water-filled cooling jacket. No bypass is required. The heating of the water at the start of the compressor always ensures a suitable impulse to the bulb.

Setting
Place a thermometer at the point where the bulb is fitted.
Remove the cover (6a). Turn the regulating nut (5) to adjust the medium flow until the thermometer shows the required temperature on the discharge side. A lower temperature can be obtained by turning the regulating nut (5) anti-clockwise (to slacken the regulating spring) – and vice versa. When the refrigeration system stops, the temperature drops at the bulb, and so WVTS closes.

Service
The water valve must close tightly when the refrigeration system is stopped. If not, it may be due to the fact that large impurities have settled on the valve seat of the servo piston of pilot cone. The strainer (20) or the pilot nozzle (21) may be clogged up.
Impurities can be removed as shown in Fig. 4.
Insert a screwdriver between the pilot cone spindle (8) and the push rod (4). Tilting the screwdriver forces the pilot cone down, and the valve opens to full cooling water flow.
If still the water valve does not close tightly, shut off the cooling water supply to the water valve. Unscrew the strainer assembly (19) and clean both the strainer and the pilot nozzle.
If the strainer or pilot nozzle is not clogged up, dismount the top part (6) and the valve cover (12), which can be done without relieving the system of its pressure. Remove the strainer assembly from the valve cover, clean it, and apply a coat of water-resistant, acid-free grease to it. Fill the same kind of grease into the space over the Teflon sleeves (9). It may be necessary to grind the pilot cone in its seat.
Clean the servo piston and valve seat and apply a coat of water-resistant, acid-free grease to the servo cylinder and the servo piston guide.
The pilot channels in the valve cover can be cleaned after the screws have been unscrewed from the sides of the valve cover.
Check whether the O-rings need replacement.
After fitting or overhaul the water valve must be flushed vigorously for some minutes in order to remove any impurities from pipelines, etc. See Fig. 4.
If there is any risk of the valve bursting due to frost during standstill periods, it should be drained of water. It can be done by unscrewing the drain plug (17) and the bottom screw (16).

DEUTSCH

Thermostatische Wasserventile

Technische Daten

1. Fühler
2. Stopfbüchse
3. Wellrohrelement
4. Druckbolzen
5. Regelmutter
6. Einstellgehäuse
6a. Deckel
7. Piloteinsatz
8. Pilotkegel
9. Teflonmanschetten
10. Isolierscheibe
10a. Dichtung f. Piloteinsatz
11. O-Ring f. Piloteinsatz
12. Deckel
13. O-ring f. Deckel *
14. O-Ring f. Pilotkanal
15. Servokolben
16. Bodenschraube f. Servokolben
17. Bodenstopfen
18. Dichtung f. Bodenstopfen
19. Filtereinsatz, komplett
20. Selbstreinigendes Filter
21. Pilotdüse
22. Dichtung
23. O-Ring
24. Servofeder **

* Ventilgrösse angeben
** Siehe Tabelle, Abb. 5.

Max. Prüfdruck
16 atü (p_e = 16 bar)

Öffnungsdifferenzdruck
WVTS 32-40: min. 0.5 at (0.5 bar)
max. 4 atm. (4 ba).
WVTS 50-100: min. 0.3 atm. (0.3 bar)
max. 4 atm. (4 bar).

Wenn das Ventil WVTS mit einem Differenzdruck von 1 - 10 at (1 - 10 bar) gewünscht wird, so ist die Servofeder (24) auszuwechseln. Siehe Bestelltabelle, Abb. 5.

Zulässige Medientemperaturen
Wasser: max. +90°C
Sole: min. –25°C

Max. Fühlertemperaturen
57°C in den Bereichen –15°C bis +10°C und 0°C bis +30°C.
90°C im Bereich +25°C bis +65°C.

Montage
WVTS wird mit nach oben gerichtetem Well-rohrelement und mit Durchfluss in Pfeilrichtung in den Kühlwassereintritt eingebaut. Es emp-fiehlt sich, vor dem Ventil ein Schmutzfilter einzubauen.
Der Fühler ist an der Stelle anzuordnen, wo man die Sollwerttemperatur des Wassers einzuhalten wünscht. Der Fühler kann ohne Beeinträchtigung der Regelfähigkeit beliebig wärmer oder kälter als das Ventilgehäuse angebracht werden.
Bei Ventilen mit dem Bereich –15°C bis +10°C kann der Fühler in beliebiger Lage angeordnet werden.
Bei Ventilen mit den übrigen Bereichen ist der Fühler waagerecht oder mit dem freien Fühlerende zuunterst zu montieren. Bei einem waagerechten oder schrägen Fühlereinbau müssen die am Fühler angebrachten Buchstaben UP sowie der rote Strich nach oben zeigen.
An Verflüssigern (Abb. 3) kann der Fühler entweder mittels Schellen an der Austrittleitung befestigt, in eine Fühlerhülse des Austritts eingeführt oder auch in direktem Kontakt mit dem Kühlwasser angebracht werden. Bei der Inbetriebsetzung der Anlage muss der Fühler sofort auf Temperaturschwankungen im durchströmenden Kühlwasser ansprechen können. Daher kann zur Sicherung eines Kühlwasserdurchflusses in der Anlaufphase eine absperrbare Umlaufleitung erforderlich sein. Bei einer Fühlermontage in direktem Kontakt mit dem Kühlwasser ist der Fühler so zu befestigen, dass er nicht durch Pulsationen gelockert werden kann, weil dabei das Kapillarrohr zerstört werden könnte. Bei Verwendung einer Fühlerhülse ergibt sich eine gute Wärmeübertragung, wenn man den Zwischenraum zwischen Fühler und Hülse mit Kupferpaste ausfüllt. Bei Luftkompressoren u. dergl. ist der Fühler im Kühlwassermantel anzuordnen. Dabei erübrigt sich eine Umlaufleitung, weil die beim Kompressoranlauf entstehende Erwärmung des Wassers einen ausreichenden Impuls an den Fühler abgibt.

Einstellung
An der Montagestelle des Fühlers ist ein Thermometer anzubringen.
Deckel (6a) entfernen. Mit Hilfe der Regelmutter (5) wird nun der Mediendurchfluss eingeregelt, bis das Thermometer die an der Austrittseite gewünschte Temperatur anzeigt. Durch Linksdrehen der Regelmutter (5) (Lockern der Regelfeder) ergibt sich eine niedrigere Temperatur- und umgekehrt.
Sobald die Kälteanlage ausschaltet, geht die Temperatur am Fühler zurück und das Ventil WVTS wird schliessen.

Wartung
Bei stillgesetzter Kälteanlage muss das Wasserventil die Kühlwasserzufuhr völlig absperren. Ist dies nicht der Fall, können sich möglicherweise an den Ventilsitzen des Servokolbens oder des Pilotkegels grössere Schmutzteilchen festgesetzt haben. Vielleicht sind auch das Filter (20) oder die Pilotdüse (21) verstopft.

Abb. 4 zeigt, wie man möglicherweise Schmutzteilchen entfernen kann. Zwischen die Spindel des Pilotkegels (8) und den Druckbolzen (4) steckt man einen Schraubenzieher und drückt damit den Pilotkegel nach unten, sodass dabei das Ventil den vollen Kühlwasserdurchfluss freigibt.
Wenn danach das Ventil immer noch nicht völlig dicht absperrt, so muss die Kühlwasserzufuhr unterbrochen werden. Darauf sind der Filtereinsatz (19) auszuschrauben und Filter und Pilotdüse zu reinigen.
Wenn keine Verstopfung des Filters oder der Pilotdüse festgestellt werden konnte, müssen das Einstellgehäuse (6) und der Ventildeckel (12) ausgebaut werden.
Dieser Ausbau kann bei unter Druck stehender Anlage erfolgen. Piloteneinsatz aus dem Ventildeckel herausnehmen, reinigen und mit einem wasserbeständigen säurefreien Fett schmieren. Der Raum über den Teflon-manschetten (9) ist mit dem gleichen Schmierfett zu füllen. Unter Umständen muss der Pilotkegel neu in den Pilotsitz eingeschliffen werden.
Servokolben und Ventilsitz reinigen. Servozylinder und Führung des Servokolbens mit wasserfestem, säuerfreiem Fett schmieren.
Die Pilotkanäle im Ventildeckel lassen sich nach Entfernung der Schrauben aus den Deckelseiten reinigen.
Prüfen, ob eine Auswechslung der O-Ringe erforderlich ist.
Nach dem erneuten Zusammenbau - und überhaupt nach jeder Inspektion - muss das Ventil einige Minuten lang gründlich durchgespült werden, um etwaige Schmutzteilchen aus Rohrleitungen usw. zu entfernen. Siehe Abb. 4.
Wenn in Standzeiten die Gefahr einer Frostsprengung des Ventils besteht, so sollte man das Wasser daraus ablassen. Zu diesem Zweck sind der Bodenstopfen (17) und die Schraube (16) zu enffernen.

FRANÇAIS

Vannes thermostatiques à eau

Caractéristiques techniques

1. Bulbe
2. Presse-êtoupe
3. Elément du soufflet
4. Tige de pression
5. Ecrou de réglage
6. Boîtier de réglage

6a. Couvercle

7. Cartouche pilote
8. Cône pilote
9. Manchons en téflon
10. Disque isolant

10a. Joint pour cartouche pilote

11. Bague torique pour cartouche pilote
12. Couvercle
13. Bague torique pour couvercle *
14. Bague torique pour canal pilote
15. Servo-piston *
16. Vis de fond pour servo-piston
17. Bouchon de fond
18. Joint pour bouchon de fond
19. Cartouche de filtre, complète *
20. Filtre autonettoyant
21. Orifice pilote
22. Joint
23. Bague torique
24. Servo-ressort **

* Indiquer la dimension de la vanne
** Voir le tableau, fig. 5

Pression d'essai max.
16 atm.eff. (p_e = 16 bar = 1600 kPa).

Pression différentielle d'ouverture
WVTS 32-40: min. 0.5 atm. (0.5 bar = 50 kPa); max. 4 atm. (4 bar = 400 kPa).
WVTS 50-100: min. 0.3 atm. (0.3 bar = 30 kPa); max. 4 atm. (4 bar = 400 kPa).
Si l'on désire une WVTS avec une pression différentielle de 1 - 10 atm. (1 - 10 bar; 100 - 1000 kPa), le servo-ressort (24) doit être remplacé. Voir le tableau de commande, fig. 5.

Température admissible du médium
Pour eau: max. +90°C
Pour saumure: min: –25°C.

Température max. du bulbe
57°C pour la plage: –15°C à +10°C et 0°C à +30°C.
90°C pour la plage: +25°C à +65°C.

Montage

Monter la WVTS dans l'entrée de l'eau de refroidissement, pour passage du liquide dans le sens de la flèche et l'élément de soufflet orienté vers le haut. Il est recommandé de monter un filtre à saletés en amont de la vanne.
Monter le bulbe à l'endroit où l'on désire maintenir l'eau à la température désirée. Sans influencer la capacité de régulation, le bulbe peut être placé dans une ambiance plus chaude ou plus froide que celle du corps de vanne.
Pour les vannes de la plage allant de –15°C à +10°C, le bulbe peut être monté dans une position quelconque.
Pour les vannes des autres plages, le bulbe doit être monté horizontalement ou avec son extrémité libre placée au niveau le plus bas.
En cas d'un montage horizontal ou oblique, les lettres UP ainsi que le trait rouge sur le bulbe doivent tourner vers le haut. Sur les condenseurs (fig. 3), le bulbe peut être soit fixé sur la conduite de sortie au moyen d'un collier de serrage, soit monté dans une poche à bulbe sur la conduite de sortie, soit placé en contact direct avec l'eau de refroidissement.
Au démarrage de l'installation, le bulbe doit pouvoir être exposé immédiatement à l'influence des variations de température de l'eau de refroidissement en circulation. Par conséquent, il peut être nécessaire de prévoir un by-pass avec vanne d'arrêt pour assurer un courant d'eau de refroidissement à la mise en marche.
Si le bulbe est monté en contact direct avec l'eau de refroidissement, le fixer de sorte que des impulsions ne puissent pas l'influencer et détériorer le tube capillaire de ce fait.
En cas d'utilisation d'une poche à bulbe on obtient une bonne transmission dé chaleur si la poche est bourrée de pâte de cuivre.
Sur les compresseurs d'air et machines analogues, monter le bulbe dans la chemise remplie d'eau de refroidissement. Dans ce cas-là, un by-pass n'est pas nécessaire. Le réchauffage de l'eau à la mise en marche du compresseur assure toujours une impulsion suffisante au bulbe.

Réglage

Placer un thermomètre à l'endroit où est monté le bulbe.
Enlever le couvercle (6a). Au moyen de l'écrou de réglage (5), régler le passage du médium jusqu'à ce que le thermomètre indique la température désirée du côté sortie.
Une température plus basse est obtenue en tournant l'écrou de réglage (5) vers la gauche (le ressort de réglage est déchargé) – et inversement.
A l'arrêt de l'installation frigorifique, la température au bulbe baisse et, par conséquent, la WVTS se ferme.

Entretien

A l'arrêt de l'installation frigorifique, la vanne doit couper totalement le passage de l'eau de refroidissement. Si ce n'est pas le cas, cela peut être dû à ce que des particules de saleté assez grosses se sont fixées sur le siège du servo-piston ou du cône pilote. Le filtre (20) ou l'orifice pilote (21) sont peut-être bouchés.
On peut essayer d'enlever les saletés comme montré fig. 4. Introduire un tournevis entre la tige (8) du cône pilote et la tige de pression (4). En basculant le tournevis, le cône pilote est pressé vers le bas et la vanne s'ouvre pour le plein passage de l'eau de refroidissement.
Dans le cas ou la vanne à eau ne ferme toujours pas hermétiquement, couper l'accès d'eau de refroidissement à la vanne. Dévisser la cartouche de filtre (19) et nettoyer tant le filtre que l'orifice pilote. Si ni le filtre ni l'orifice pilote ne sont bouchés, démonter la partie supérieure (6) et le couvercle (12) de la vanne. La partie supérieure et le couvercle de la vanne peuvent être démontés sans décharger l'installation. Sortir la cartouche pilote du couvercle de la vanne, la nettoyer et la graisser avec une graisse non acide résistante à l'eau. Remplir l'espace au- dessus des manchons en téflon (9) de la même graisse. Peut-être faut-il roder le cône pilote dans le siège pilote.
Nettoyer le servo-piston et le siège de la vanne et enduire le servo-cylindre et le guide du servo-piston d'une graisse non acide résistante à l'eau.
Les canaux pilotes du couvercle de la vanne peuvent être nettoyés après avoir dévissé les vis des côtés du couvercle de la vanne.
Examiner si les bagues toriques doivent être remplacées.
Après le montage ou après un entretien il est nécessaire, pendant quelques minutes, de purger énergiquement la vanne afin éliminer des conduites etc. d'éventuelles saletés. Voir fig. 4.
En cas de risque d'éclatement par le gel de la vanne pendant les périodes d'arrêt, celle-ci doit être vidée. A cet effet, enlever le bouchon de fond (17) et la vis (16).

Produced by Danfoss G1 advertising agency 98.09 Bi.CCB

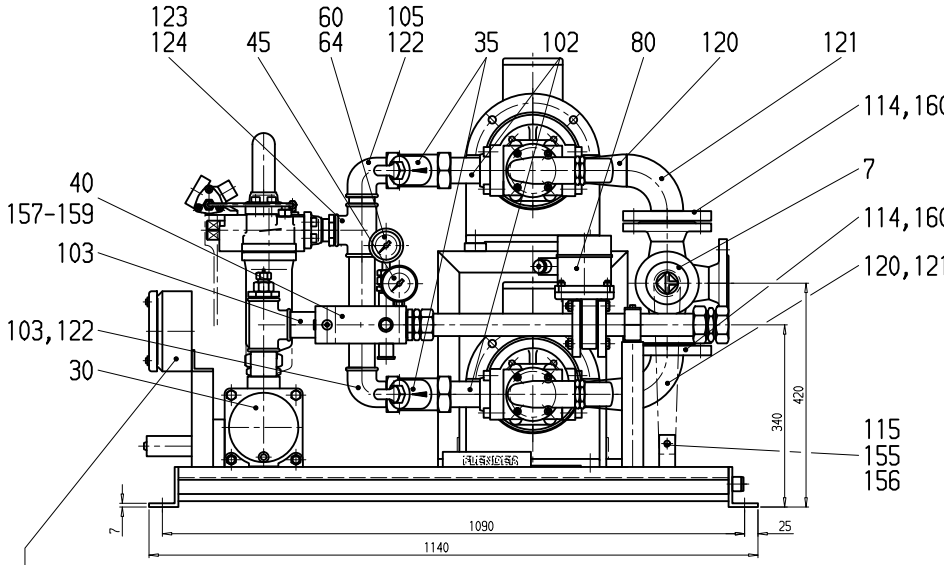

Klemmenkasten und Verdrahtung nur im Auftragsfall
TERMINAL BOX AND WIRING ONLY ON ORDER

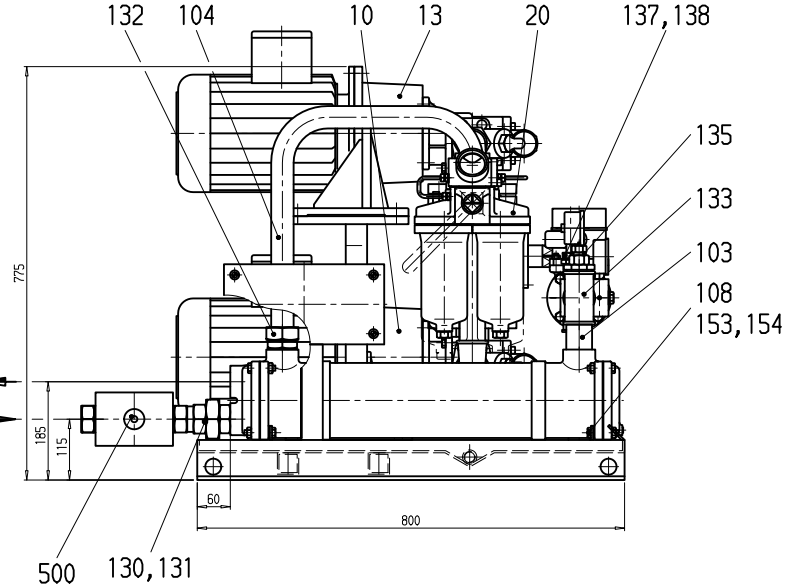

Kühlwasseraustritt G 1 1/2
COOLING WATER OUTLET

Kühlwassereintritt G 1 1/2
COOLING WATER INLET

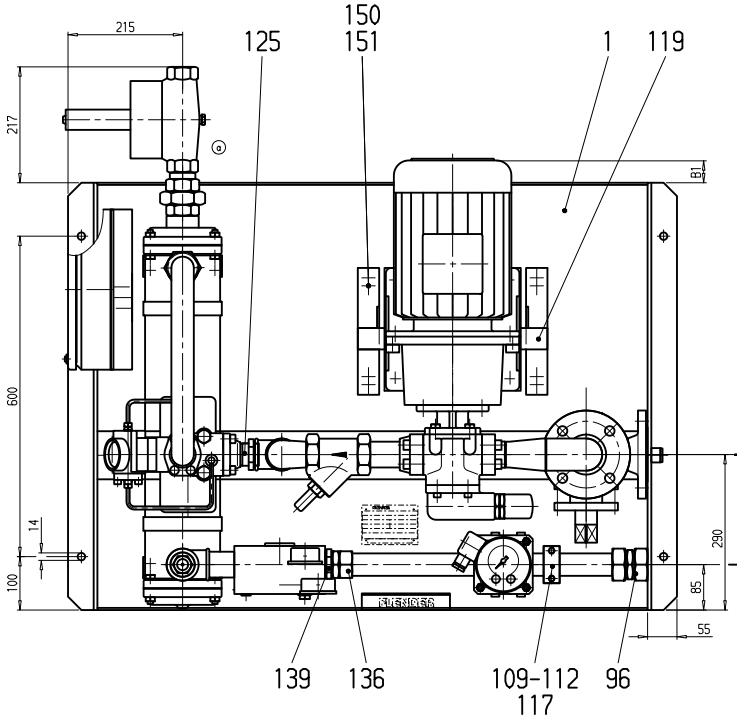

Saugleitung Flansch DN 50 DIN 2532/PN10
SUCTION PIPE FLANGE

Druckleitung
PRESSURE PIPE

* OIL SUPPLY SYSTEM

2	A3	Schmierschema
1	A1	.
Blatt	Format	Hinweis

Tabelle 1 / TABLE 1

BAUGRÖSSE SIZE	ANSCHLUSS CONNECTION Druckleitung PRESSURE PIPE	B 1 (mm)	Gewicht (kg) WEIGHT
	ROHR PIPE Ø .../DIN 2391		
5	35	40	245
6	42	80	265

ANSCHLUSSQUERSCHNITTE GELTEN
FÜR MAX. 3M ROHRLÄNGE
EINSCHL. 3 ROHRBÖGEN UND
FÜR ANFAHRVISKOSITÄT 3200 CST.
GEODÄTISCHER HÖHENUNTERSCHIED = 0
CONNECTION CROSS SECTIONS VALID FOR
MAX. PIPE LENGTH OF 3M INCL.
3 PIPE BENDS AND FOR
STARTING VISCOSITY 3200 CST.
GEODATIC LEVEL DIFFERENCE = 0

Äl	Feld	Änderungsbeschreibung	Datum	Name	Norm	
a	D11	Kühlwassermengenregular geändert	2004-07-07	VGS	OK	2004-07-08
						2004-01-21 gesichert

Auftr.-Nr. .

Tolerierung nach DIN ISO 8015

Allgemeintoleranzen <30 ±0,3 sonst nach DIN ISO 2768-mH

FLENDER

Werkstoff /-Nr. .

Nicht gekennzeichnete Oberflächen: .

Rauhwerte Ra in µm

Gez.	TFA	2004-01-20	Grewe
Gepr.	TFA	2004-01-20	Grewe
Norm	TFA	.	.
	Abt.	Datum	Name

Maßstab 1:5

Gewicht (kg)

Trägheitsmoment J (kgm²) .

Gewicht (kg) SEE TABLE 1

Basis-Nr. Äl Modell-Nr. Ä Anz. Teil

Benennung Schl.-Nr.: 0348

* OELVERSORGUNGSANLAGE

OWGD 5/6 VARIANTE 9
OWGD 5/6 VARIANTE 9

Blatt 1 von 2
SHEET 1 OF 2

Rohteil nach Zeichnung .

sonst nach Zeichnung .

Format Art Zeichnungs-Nr. Äl
6 . 6 043 465 a

Ersatz für . Aus Zchng. 5 475 227

Maße in mm

Schutzvermerk ISO 16016 beachten

DE EN FR SP IT PO SU SW NL DK

PLOTT-DATUM: 08-MAY-2006 15:44:27 H. Raschig/HDVZ

219/428

SCHMIERSCHEMA
LUBRICATION DIAGRAM

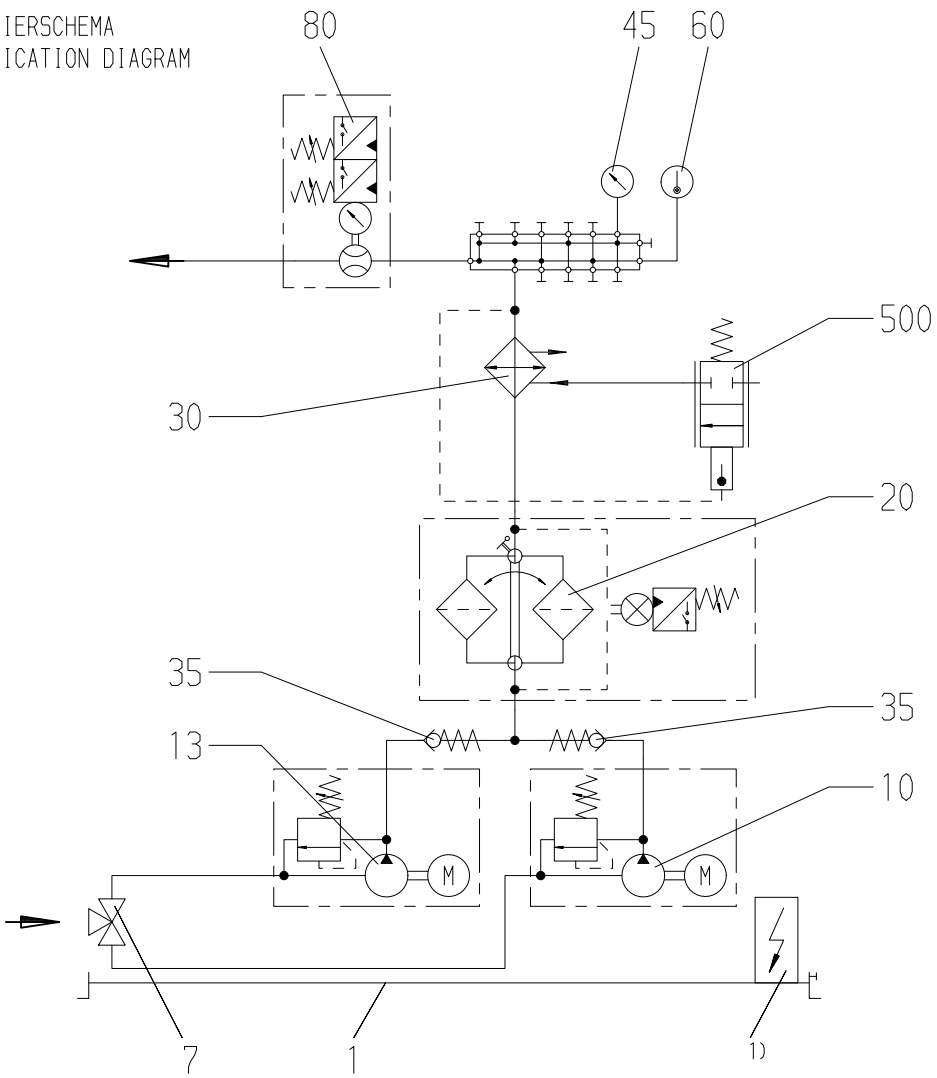

	Teil Nr. PART NO.
Grundrahmen BASE FRAME	1
Dreiwegehahn, Saugleitung THREE-WAY COCK, SUCTION PIPE	7
2 Pumpengruppen, Druckbegrenzungsventil 2 PUMP GROUPS, PRESSURE LIMITATION VALVE	10,13
Doppel-Schaltfilter DOUBLE CHANGE-OVER FILTER	20
Wasser-Ölkühler WATER-OIL COOLER	30
2 Rückschlagventile 2 NON-RETURN VALVES	35
Manometer MANOMETER	45
Thermometer THERMOMETER	60
Strömungswächter FLOW CONTROL	80
Kühlwassermengenregler COOLING WATER FLOW CONTROL	500

1) Klemmenkasten und Verdrahtung nur im Auftragsfall
1) TERMINAL BOX AND WIRING TO BE ORDERED SEPARATELY

* OIL SUPPLY SYSTEM

a	.	Siehe Blatt 1	2004-07-07	VGS	OK	2004-07-08
ÄI	Feld	Änderungsbeschreibung	Datum	Name	Norm	2004-01-21
		Auftr.-Nr. .				gesichert

Tolerierung nach DIN ISO 8015

Allgemeintoleranzen ≤30 ±0,3 sonst nach DIN ISO 2768-mH

FLENDER

Werkstoff /-Nr. . .

Benennung Schl.-Nr.: 0348

* OELVERSORGUNGSANLAGE

Nicht gekennzeichnete Oberflächen: .

Rauhwerte Ra in µm

Gez.	TFA	2004-01-20	Grewe
Gepr.	TFA	2004-01-20	Grewe
Norm	TFA	.	.
	Abt.	Datum	Name

Maßstab 1:1 Gewicht (kg)

Trägheitsmoment J (kgm²) . .

Basis-Nr. ÄI Ä Anz. Teil
Modell-Nr.

OWGD 5/6 VARIANTE 9
OWGD 5/6 VARIANTE 9

Blatt 2 von 2
SHEET 2 OF 2

Rohteil nach Zeichnung .

sonst nach Zeichnung .

Format Art Zeichnungs-Nr. ÄI
8 . 6 043 465 a

Ersatz für . Aus Zchng. 5 475 227

Blatt	Format	Hinweis
2	A3	.
1	A1	Oelversorgungsanlage

Maße in mm

Schutzvermerk ISO 16016 beachten

DE EN FR SP IT PO SU SW NL DK

PLOTT-DATUM: 08-MAY-2006 15:44:24 H. Raschig/HDVZ

2201428

/B0

CAD-DRAWING TO BE MODIFIED ON THE MONITOR ONLY

THIS TECHNICAL DOCUMENT IS REGISTERED (DIN 34)

Zeile Line	1 Änd. Rev.	2 Benennung Description	3 Blatt Sheet	4 Planart Plantyp	5 Anlage Unit	6 Gruppe Group	7 Ort Place
1		Inhaltsverzeichnis Table of contents	1	INH			
2		Aufbauplan Cabinet layout	1	SSL			
3		Überwachung Monitoring	1	STR			
4		Klemmenplan Connection plan	1	VKL		-X9	
5		* *					
6		* *					
7		* *					
8		* *					
9		* *					
10		* *					
11		* *					
12		* *					
13		* *					
14		* *					
15		* *					
16		* *					
17		* *					
18		* *					
19		* *					
20		* *					

Zeile Line	1 Änd. Rev.	2 Benennung Description	3 Blatt Sheet	4 Planart Plantyp	5 Anlage Unit	6 Gruppe Group	7 Ort Place
21		* *					
22		* *					
23		* *					
24		* *					
25		* *					
26		* *					
27		* *					
28		* *					
29		* *					
30		* *					
31		* *					
32		* *					
33		* *					
34		* *					
35		* *					
36		* *					
37		* *					
38		* *					
39		* *					
40		* *					

Rev.	Discription
1	

2

Order No. = 5 6 . 7 + 4 3 Sh.

Rev	Description	Date	Name					
				Date	25.11.02			
				Drawn	TBK			
				Checked	TBK			
				Norm	DIN	Made from	In exchange for	exchanged thru

FLENDER

Inhaltsverzeichnis

Table of contents

5 353 879

Order No. 425.104.013/005

INH 1 / 1 Sh.

3

CAD-DRAWING TO BE MODIFIED ON THE MONITOR ONLY

THIS TECHNICAL DOCUMENT IS REGISTERED (DIN 34)

Typ: 1515.210 (300x150x80)

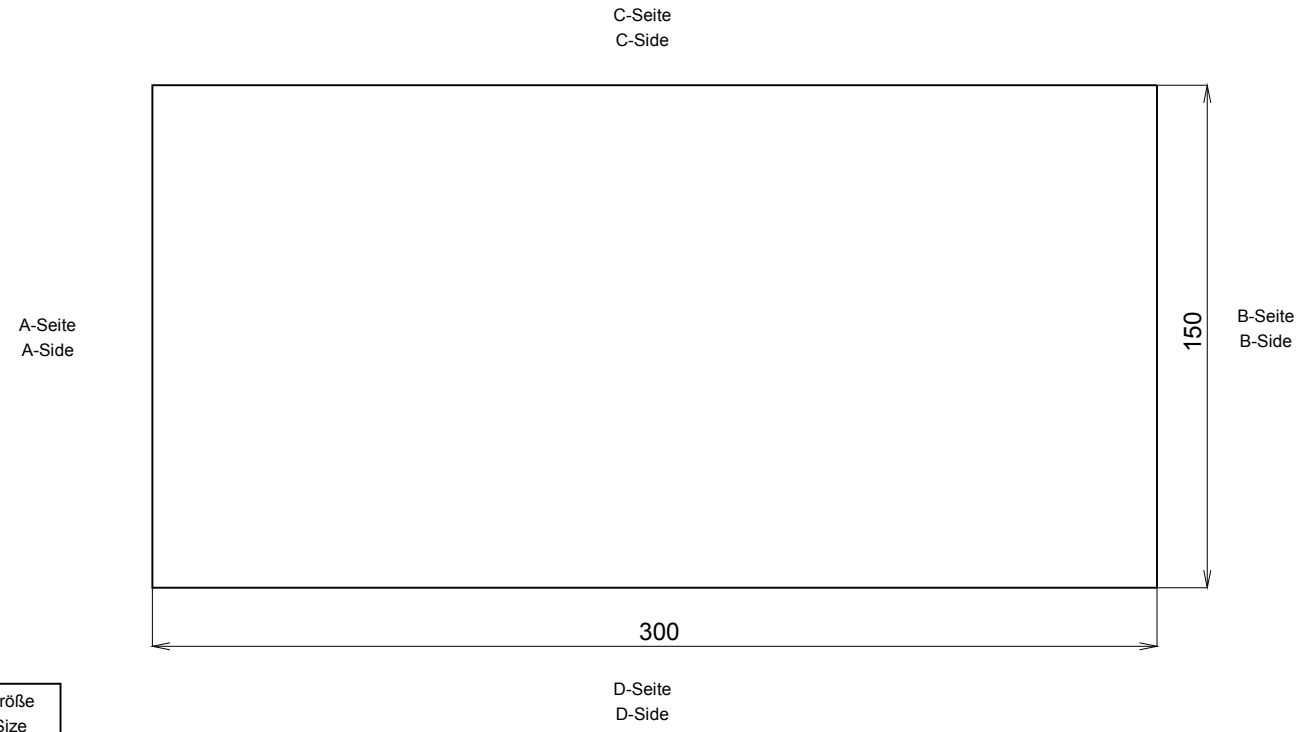

A-Seite A-Side	B-Seite B-Side	C-Seite C-Side	D-Seite D-Side	Größe Size
Verschraubungen / Cable glands				
				M12
			2	M16
				M20
				M25
				M32
Verschlußstopfen / Plugs				
				M12
				M16
				M20
			1	M25
				M32

Rev	Description	Date	Name					
				Date	25.11.02			
				Drawn	TBK			
				Checked	TBK			
				Norm	DIN	Made from	In exchange for	exchanged thru

FLENDER

Aufbauplan

Cabinet layout

5 353 879

Order No. 425.104.013/005

SSL

1

1 Sh.

3

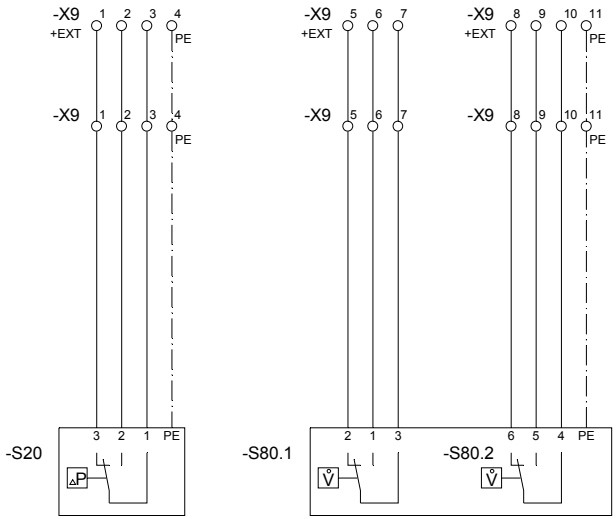

Differenzdruckwächter
Differential pressure monitor
Commutateur de Presion Differentielle

Volumenstrom-Meßgerät
Volume flow meter
Debitmetre

				Date	25.11.02				FLENDER	Überwachung	5 353 879	Order No. 425.104.013/005	
				Drawn	TBK								
				Checked	TBK					Monitoring		STR	1 / 1 Sh.
Rev	Description	Date	Name	Norm	DIN	Made from	In exchange for	exchanged thru					

Verbindungsleitungen Conecting lines	Zielbezeichnung Richtung Maschine Target description maschine direction				Klemmenleiste Terminal strip -X9					Zielbezeichnung Richtung Schaltschrank Target description cabinet direction			
	Kennzeichen Designation			Anschl. Connec.	Typ Typ	Brücke Jumper	Klemme Terminal	A mm² A mm²	Schaltplanposition Wiring diagram pos.	Kennzeichen Designation			Anschl. Connec.
	=	+	-	:				max.	STR	=	+	-	:
		+EXT	-X9	1	UK5N		1	4.0	STR/1.1			-S20	3
		+EXT	-X9	2	UK5N		2	4.0	STR/1.2			-S20	2
		+EXT	-X9	3	UK5N		3	4.0	STR/1.2			-S20	1
		+EXT	-X9	4	USLKG 5		4	4.0	STR/1.2			-S20	PE
		+EXT	-X9	5	UK5N		5	4.0	STR/1.2			-S80.1	2
		+EXT	-X9	6	UK5N		6	4.0	STR/1.3			-S80.1	1
		+EXT	-X9	7	UK5N		7	4.0	STR/1.3			-S80.1	3
		+EXT	-X9	8	UK5N		8	4.0	STR/1.3			-S80.2	6
		+EXT	-X9	9	UK5N		9	4.0	STR/1.3			-S80.2	5
		+EXT	-X9	10	UK5N		10	4.0	STR/1.3			-S80.2	4
		+EXT	-X9	11	USLKG 5		11	4.0	STR/1.3			-S80.2	PE

Rev	Description	Date	Name					
				Date	25.11.02			
				Drawn	TBK			
				Checked	TBK			
				Norm	DIN	Made from	In exchange for	exchanged thru

FLENDER

Klemmenplan

Connection plan

5 353 879

Order No. 425.104.013/005

. -X9

VKL

1

1 Sh.

Part No.	Qty.	Description	Manufacturer Operating instruction
		Switching and monitoring functions in accordance with: **Lubrication schedule drawing no. 6 043 465-2 a** **Oil–supply system type OWGD, size 05 variant 9** **Assembly drawing no. 6 043 465-1 a** **Terminal diagram drawing no. 5 353 879** **refer also to Operating Instructions BA 9702 EN 05.98**	
7	1	**Three–way valve** Type/No.: 14-070 as per DIN 3472 Connection DN 50 Nominal pressure PN 10 Housing material GG with valve key Place of installation: suction side	**ERICHLANDWEHR** BA ELW.HAH.000 ..
10	1	**Gear pump** Type to FLENDER works standard: F 5958 Size 5 (SF 3/32 RD–VLFM) Nominal pressure : PN 25 Housing material: GG-25 Rotation speed:1430 1/min Oil flow rate approx. 52 l/min Starting temperature > 10 °C Operating pressure: < 8 bar Direction of rotation: right with pressure relief valve set to p > 8 bar directly coupled with:	**STEIMEL** BA STE.PUM.000 ..
	1	**Three-phase motor** Type B5 Size 100 L-04 Speed 1430 1/min Output 3 kW Voltage 3x380...420 V IEC38) Frequency 50 Hz Insulation class F Type of protection: IP 55 Efficiency: EFF1	**SIEMENS** BA 610.42348.21 a ..
13	1	**Gear pump** Type to FLENDER works standard: F 5958 Size 5 (SF 3/32 RD–VLFM) Nominal pressure : PN 25 Housing material: GG-25 Rotation speed:1430 1/min Oil flow rate approx. 52 l/min Starting temperature > 10 °C Operating pressure: < 8 bar Direction of rotation: right with pressure relief valve set to p > 8 bar directly coupled with:	**STEIMEL** BA STE.PUM.000 ..

Diese technische Unterlage hat gesetzlichen Schutz (DIN 34)

Part No.	Qty.	Description	Manufacturer Operating instruction
	1	**Three-phase motor** Type B5 Size 100 L-04 Speed 1430 1/min Output 3 kW Voltage 3x380...420 V IEC38) Frequency 50 Hz Insulation class F Type of protection: IP 55 Efficiency: EFF1	**SIEMENS** BA 610.42348.21 a ..
20	1	**Double change–over filter** Type to FLENDER works standard: W5921 Type/No.: 32.25 .2.F2 Connection DN 32 Nominal pressure PN 16 Oil flow rate approx. 52 l/min Housing material GG-20 Material filter dome GK-Al Filter fineness 25 µm Filter element of VA metal fabric with optical differential pressure display **with electrical differential pressure monitor** Type/No.: 2.F2 Number of switching contacts: 1 Contact rating: 1 A / 250 V AC / 60 VA 1 A / 250 V DC / 30 W Type of protection: IP 65 > 2 bar **:***WARNING* (Clean filter)	**FLENDER** B 5921
30	1	**Water oil–cooler** Type/No.: OELK 03 (AM 13 JFL 24 D) Quantity of heat to be dissipated 14,9 kW Oil flow rate approx. 52 l/min Oil temperature cooler input/output: 70 / 60 °C Cooling water quantity required 2,4 m^3/h Water temperature cooler input/output: 35 / 40 °C Execution: resistant to brackish water	**SERCK** BA SER.KUE.001 ..
35	2	**Non–return valve** To Flender works standard W 5916 Connection G 1 1/2 Nominal pressure PN 16 Housing material: chromated brass Place of installation: pressure side	**FLENDER** B 5916

Diese technische Unterlage hat gesetzlichen Schutz (DIN 34)

Part No.	Qty.	Description	Manufacturer Operating instruction
45	1	**Manometer** Type to Flender works standard: W 5914 Connection G 1/4 Nominal size NG 63 Grade of accuracy: 1,6 (DIN 16005) Filling measurement device Glycerine Housing material: VA Measurement range 0-10 bar / 0-140 PSI	**FLENDER** B 5914
60	1	**Thermometer** Type to Flender works standard W 5924 Connection: G 1/2 Nominal size NG 63 Grade of accuracy: 1 (DIN 16203) Filling measurement device Glycerine Housing material: VA Measurement range –20 ... +120 °C / -4 ... +249 °F with proctective tube type/no.: FLENDER G 1/2 x 100 Connection protective tube G 1/2 length of protective tube 100 mm	**FLENDER** B 5924
80	1	**Flow monitor** Type to Flender works standard W 5927 with optical display Oil flow rate approx. 52 l/min corresponds to scale reading approx. 93 % Measurement range 17-54 l/min Number of switching contacts: 2 Contact rating: 5 A / 250 V AC / 500 VA 0.4 A / 30 V DC / 25 W Type of protection: IP 65 V80.1 < 80 % oil flow rate = scale reading 74 % :*WARNING* V80.2 < 70 % oil flow rate = scale reading 65 % :*GEAR UNIT STOP*	**FLENDER** B 5927
		Connection water side:	
500	1	**Cooling water flow regulator** Type/No.: WVTS 40 Nominal width: G 1 1/2 Nominal pressure: 16 bar Housing material: GG Connection pipe length: 2 m with immersion tube Type/No.: 017–4367 Connection immersion tube:G 1/2 Immersion tube length: 210 mm Adjustment range: 25 - 65 °C	**DANFOSS** BA DAN.VEN.001 ..

Diese technische Unterlage hat gesetzlichen Schutz (DIN 34)

Operating Instructions

BA 5012 EN 10.98

Crane gear units of types
K.SH, K.VH, K.HH, K.KH, K.DH, K.HM, K.KM, K.DM
Sizes 5 to 14

K.SH
K.VH

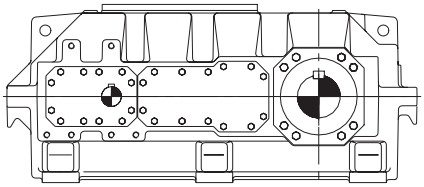

K.HH
K.KH

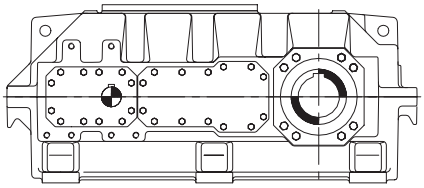

K.DH

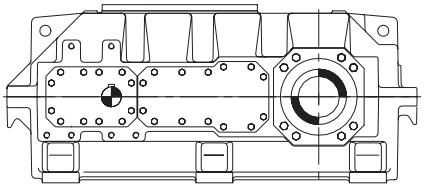

K.HM
K.KM

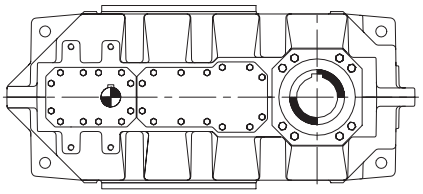

K.DM

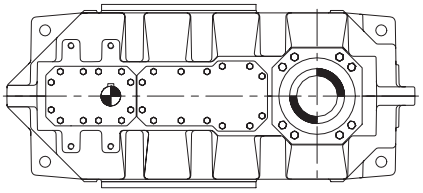

FLENDER

A. Friedr. Flender AG · 46393 Bocholt · Tel. 02871/92-0 · Telefax 02871/92-2596 · www.flender.com

Contents

1.	**Technical data**	**4**
1.1	General technical data	4
1.1.1	Weights	5
1.1.2	Measuring-surface sound level	5
2.	**General notes**	**6**
2.1	Introduction	6
2.2	Copyright	6
3.	**Safety notes**	**7**
3.1	Proper use	7
3.2	Obligations of the user	7
3.3	Environmental protection	8
3.4	Special dangers	8
3.5	Warnings and symbols used in these Instructions	8
4.	**Handling and storage**	**8**
4.1	Scope of supply	8
4.2	Handling	8
4.3	Storage	9
4.4	Standard corrosion protection	10
5.	**Technical description**	**10**
5.1	General description	10
5.2	Housing	12
5.3	Toothed components	12
5.4	Lubrication	12
5.5	Bearings	12
5.6	Shaft seals	13
5.6.1	Radial shaft sealing rings	13
5.6.2	Taconite seals	13
5.7	Cooling	15
5.8	Couplings	15
6.	**Assembly**	**15**
6.1	General information on installation	15
6.2	Installation of gear unit on housing base	16
6.2.1	Foundation	16
6.2.2	Description of installation work	16
6.2.2.1	Aligning surfaces, aligning thread	17
6.2.2.2	Mounting on a foundation frame	17
6.3	Assembly of a shaft-mounting gear unit with hollow shaft and parallel-keyway	18
6.3.1	Assembly	18
6.3.1.1	Fitting	18
6.3.1.2	Axial securing device	18
6.3.2	Dismantling	19
6.4	Shaft-mounting gear unit with hollow shaft and internal spline to DIN 5480	20
6.4.1	Assembly	20
6.4.1.1	Fitting	21
6.4.1.2	Axial securing device	21
6.4.2	Dismantling	22

6.5 Shaft-mounting gear unit with hollow shaft and shrink disk 23
6.5.1 Assembly 23
6.5.1.1 Fitting 24
6.5.1.2 Axial securing device 24
6.5.2 Shrink disk type HSD 25
6.5.2.1 Assembly of shrink disk 25
6.5.2.2 Removing the shrink disk 26
6.5.2.3 Cleaning and greasing the shrink disk 26
6.5.3 Dismantling 27
6.6 Mounting the torque arm for gear housing 28
6.6.1 Attaching the torque arm 28

7. Start-up 29
7.1 Procedure before start-up 29
7.1.1 Removal of conservation agent 29
7.1.2 Charging with lubricant 29
7.1.2.1 Oil quantities 30
7.2 Start-up 30
7.3 Removal from service 30
7.3.1 Interior conservation during longer disuse 30
7.3.1.1 Interior conservation with gear oil 30
7.3.1.2 Interior conservation with special conservation agent 30
7.3.1.3 Interior conservation procedure 31
7.3.2 Exterior conservation 31
7.3.2.1 Exterior conservation procedure 31

8. Operation 32
8.1 General operating data 32

9. Disturbances, reasons and remedy 32
9.1 General information on faults and malfunctions 32
9.2 Possible faults 33

10. Maintenance and repair 34
10.1 General notes on maintenance 34
10.2 Description of maintenance and repair work 35
10.2.1 Test water-content of oil 35
10.2.2 Changing the oil 35
10.2.3 Cleaning the venting screw 36
10.2.4 Re-charging Taconite seals with grease 36
10.2.5 Cleaning the gear unit 36
10.2.6 Topping up oil 37
10.2.7 Check tightness of fastening bolts 37
10.2.8 General inspection of gear unit 37
10.3 Lubricants 38

11. Spare parts, service facility addresses 38
11.1 Stocking spare parts 38
11.2 Spare-part and service facility addresses 39

12. Declaration by the manufacturer 44

1. Technical data

1.1 General technical data

The most important technical data are shown on the rating plate. These data along with the contractual agreements on the gear unit determine the limits of its proper use.

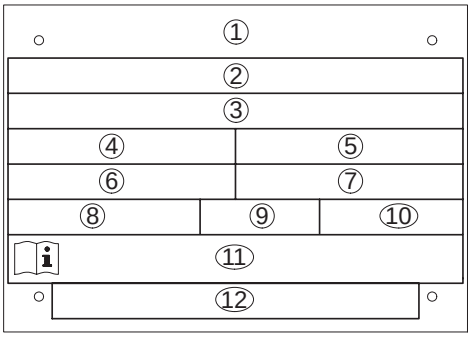

①	Company logo and production location	⑦	Speed n_2
②	Special information	⑧	Type of oil
③	Order no. - item - serial no.	⑨	Viscosity of oil in VG class
④	Type / Size *)	⑩	Quantity of oil in litres for main gear housing
⑤	Power rating P in kW or T_2 in Nm	⑪	Number of operating instruction(s)
⑥	Speed n_1	⑫	Special information

e.g. *)

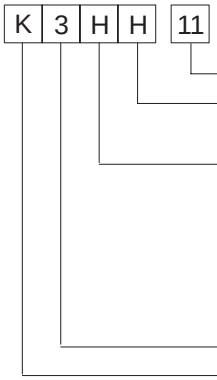

Size . . . . . 5 ... 14
Installation . . . . . H = horizontal
M = horizontal design without base
Type of output shaft . . . . . S = solid shaft
V = solid shaft, reinforced
H = hollow shaft with parallel-keyway
D = hollow shaft for shrink disk
K = hollow shaft with internal-spline to DIN 5480
Number of stages . . . . . 3 or 4
Gear-unit type . . . . . K = helical gear unit

Data on weights and measuring surface sound levels of the various gear types are given in sections 1.1.1 and 1.1.2.

For further technical details, refer to the drawings in the gear-unit documentation.

1.1.1 Weights

Type	Approx. weight (kg) for size									
	5	**6**	**7**	**8**	**9**	**10**	**11**	**12**	**13**	**14**
K3SH, K3VH, K3HH ,K3KH, K3DH	380	440	605	690	955	1100	1535	1820	2400	2860
K3HM, K3KM, K3DM	370	430	595	675	890	1035	1475	1750	2270	2710
K4SH, K4VH, K4HH ,K4KH, K4DH	385	445	615	700	975	1120	1565	1850	2445	2910
K4HM, K4KM, K4DM	375	435	605	685	910	1055	1505	1780	2315	2760

Table 1.1: Weights (approx. values only)

Note: All weights are for gear unit without oil charge or attachments. For the exact weights, refer to the drawings in the gear-unit documentation.

1.1.2 Measuring-surface sound level

The measuring-surface sound level for the gear unit at a distance of 1 m can be found in the table.

The measurement is carried out to DIN 45635 parts 1 and 23 using the sound-intensity method.

The workplace of the operating personnel is defined as the area on the measuring surface at a distance of 1 metre, in whose vicinity persons may be present.

The sound level applies for the warmed-up gear unit at input speed n_1 and input power P_1 stated on the rating plate. If several figures are given, the highest speed and power values apply.

The measuring-surface sound level includes attached lubrication units (if applicable). With outgoing and ingoing pipes, the interfaces are the flanges.

If repeat measurements on site do not produce conclusive results with regard to measuring technology, the measurement achieved on the FLENDER test bench will apply.

The sound level stated in the table was obtained by statistical calculation by our Quality Control Dept. The gear unit may be expected to comply with these sound levels with statistical probability.

Measuring-surface sound level L_{pA} in dB(A)												
Type	i_N	n_1 1/min	Gear-unit size									
			5	**6**	**7**	**8**	**9**	**10**	**11**	**12**	**13**	**14**
K3..	14	1500	73	74	75	76	78	79	80	80	81	81
	.	1000	68	69	70	71	73	74	75	76	76	77
	25	750	65	66	67	68	69	70	71	72	73	74
	28	1500	71	72	73	74	75	76	77	78	79	80
	.	1000	66	67	68	69	71	72	73	73	74	75
	31.6	750	63	64	65	66	67	68	69	70	71	72
	35.5	1500	68	69	70	71	73	73	74	75	76	77
	.	1000	63	64	65	67	68	69	70	71	72	73
	63	750	60	61	62	63	64	65	66	67	68	69
K4..	20	1500	67	69	71	73	74	74	75	76	77	78
	.	1000	63	64	65	68	69	70	71	72	73	74
	100	750	60	60	62	63	64	66	68	68	69	70
	112	1500	64	66	69	70	70	72	73	74	75	76
	.	1000	60	61	63	64	65	67	68	69	69	70
	125	750	60	60	60	61	62	63	64	66	67	68
	140	1500	61	63	66	67	67	69	70	71	72	73
	.	1000	60	60	61	62	62	64	65	66	66	67
	250	750	60	60	60	60	60	61	62	63	64	65

2. General notes

2.1 Introduction

These Operating Instructions (BA) are an integral part of the gear unit supplied and must be kept in its vicinity for reference at all times.

Caution! **All persons involved in the installation, operation, maintenance and repair of the gear unit must have read and understood these Operating Instructions and must comply with them at all times. We accept no responsibility for damage or disruption caused by disregard of these Instructions.**

The **"FLENDER gear unit"** described in these Instructions has been developed specially for lifting and running gear systems in conveyor and hoisting equipment. The power data given on the rating plate are nominal data only.

The gear unit is designed only for the application described in section 1 "Technical data". Possible use in any other area must be contractually agreed.

The gear unit described in these Instructions reflects the state of technical development at the time these Instructions went to print.

In the interest of technical progress, we reserve the right to make changes to the individual assemblies and accessories which we regard as necessary to preserve their essential characteristics and improve their efficiency and safety.

2.2 Copyright

The copyright to these Operating Instructions is held by **FLENDER AG**.

These Operating Instructions must not be wholly or partly reproduced for competitive purposes, used in any unauthorised way, or made available to third parties without our agreement.

Technical enquiries should be addressed to the following plants:

A. FRIEDR. FLENDER AG
Getriebewerk Penig
Thierbacher Straße 24
D-09322 Penig

Tel.: 037381/60
Fax: 037381/80286

A. FRIEDR. FLENDER AG

D-46393 Bocholt

Tel.: 02871/92-0
Fax: 02871/92-2596

or to our customer-service addresses. A list of our customer-service addresses is given in section 11 "Spare parts, customer-service addresses".

3. Safety notes

3.1 Proper use

- The gear unit has been manufactured in accordance with the state of the art and is delivered in a condition for safe and reliable use. All changes to the gear unit on the part of the user which may affect its safety and reliability are prohibited. This applies equally to safety features designed to prevent accidental contact.
- The gear unit should be used and operated only within the context of the conditions laid down in the contract governing performance and supply.

3.2 Obligations of the user

- The user must ensure that all persons involved in the installation, operation, maintenance and repair of the gear unit have read and understood these Operating Instructions and comply with them at all times in order to:

  – avoid injury or damage,

  – ensure the safety and reliability of the unit,

  and

  – avoid disruptions and environmental damage through incorrect use.
- During transport, assembly, installation, dismantling, operation and maintenance of the unit, the relevant safety and environmental regulations must be complied with at all times.
- The gear unit should be operated, maintained or repaired by authorised, trained and qualified personnel.
- The gear unit must not be cleaned using high-pressure cleaning equipment.
- All work on the gear unit must be carried out with great care and with due regard to safety.
- All work on the gear unit must be carried out only when it is not in operation.
  The drive assembly must be secured against being switched on accidentally (e.g. by locking the key switch or removing the fuses from the power supply). A notice should be attached to the ON switch stating clearly that work is in progress.
- No welding work should be done on the gear unit. The gear unit must not be used as an earthing point for welding operations. Delicate teeth and bearings may be irreparably damaged by welding.
- If any changes are noticed during operation (e.g. overheating or unusual noises), the drive assembly must be switched off immediately.
- Rotating drive components such as couplings, gearwheels, belt drives etc. must be protected against accidental contact.
- If the gear unit is intended for installation in plant or machinery, the manufacturer of such plant or machinery must ensure that the contents of these Instructions are incorporated in his own instructions.
- Notices attached to the gear unit, e.g. rating plate, direction arrows etc. must always be observed. They must be kept free from dirt and paint at all times.
- All spare parts must be obtained from FLENDER.

3.3 Environmental protection

- When changing oil, the used oil must be collected in suitable containers. Any spillage of oil must be removed immediately.
- Conservation agent should be stored separately from used oil.
- Used oil, conservation agent, oil-binding agents and oil-soaked cloths must be disposed of in accordance with environmental legislation.

3.4 Special dangers

- Depending on operating conditions, the surface of the gear unit may heat up considerably. **Danger of burns!**
- When changing oil, take care to prevent scalding by hot oil.

3.5 Warnings and symbols used in these Instructions

⚠ This symbol indicates safety measures which must be observed to avoid **personal injury.**

Caution! This symbol indicates safety measures which must be observed to avoid **damage to the gear unit.**

Note: This symbol indicates general **operating procedures** which are of particular importance.

4. Handling and storage

Note: Observe the ”Safety notes” in section 3.

4.1 Scope of supply

The products supplied are listed in the dispatch papers. Check immediately on receipt to ensure that all the products listed have actually been delivered. Damaged or missing parts must be notified in writing immediately.

4.2 Handling

⚠ **When handling FLENDER products use only lifting and handling equipment of sufficient load-carrying capacity!**

The gear unit is delivered in the fully assembled state. Additional items (e.g. oil cooler, pipes and fittings) are delivered separately packaged.

Different forms of packaging may be used depending on the size of the unit and method of transport. Unless otherwise agreed, the packaging complies with the **HPE Packaging Guidelines**.

The symbols marked on the packaging must be observed at all times. These have the following meanings:

bild-transport

This way up | Fragile | Keep dry | Keep cool | Centre of gravity | Use no hand hook | Attach here

Caution! **The gear unit must always be transported with due care to avoid danger to persons and property. Avoid bumping the ends of shafts as this may damage the gear unit.**

Note: The gear unit must be transported using suitable equipment only. Never transport the gear unit with an oil charge.

Caution! **Use only the 2 eyes provided for attaching lifting equipment to the unit.**
Do not use the front thread at the end of the shaft for attaching ring bolts for transport purposes.

500004-12-1

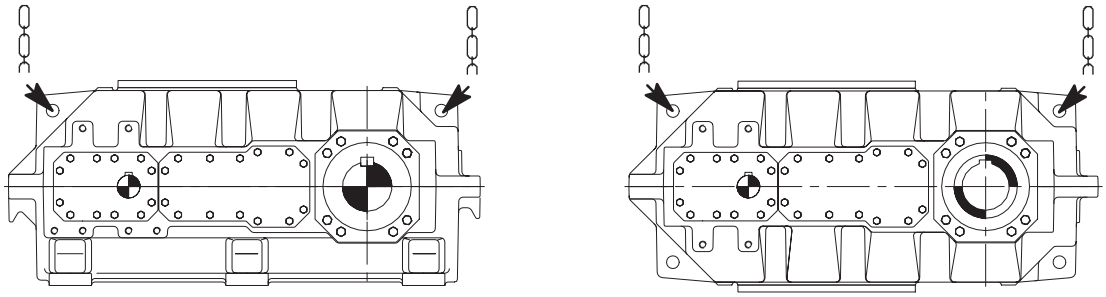

K..H **K..M**

For drive units, where additional components (e.g. motor, coupling etc.) are mounted on the gear unit, an additional attachment point may be required because of the shift in the centre of gravity.

500004-12-2

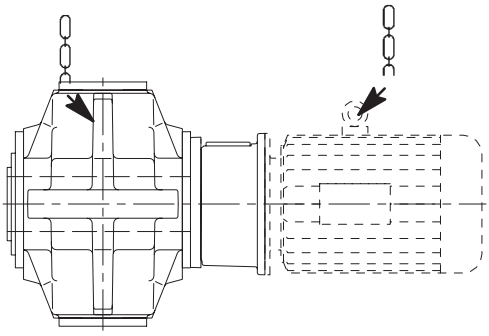

K... with motor

For a detailed illustration of the gear unit, refer to the drawings in the unit documentation.

The position of the attachment points is shown in the documentation for each specific order.

4.3 Storage

The gear unit must be stored in the position of use in a sheltered place. It must be placed on a vibration-free wooden base and covered over.

⚠ **Do not stack gear units on top of one another.**

Caution! **If the gear unit is being stored out of doors, it must be covered with particular care. It must be ensured that neither moisture nor foreign material can collect on the unit.**

Note: Provision for special environmental conditions during transport (e.g. transport by ship) and storage (climate, termites etc.) must be contractually agreed.

4.4 Standard corrosion protection

The gear unit is filled with conservation agent. The free shaft ends are painted for protection.

The outer paint coating is resistant to dilute acids, alkalis, oils and solvents. It is also resistant to sea water, tropical-climate conditions and temperatures up to 140 °C.

Note: Ensure that the paint is not damaged!
Mechanical damage (scratches), chemical damage (acids, alkalis) and thermal damage (sparks, welding beads, heat) cause corrosion which may cause failure of the exterior protective coating.

Note: Unless otherwise agreed, we grant a guarantee of 24 months on the interior corrosion protection, and 12 months on the protective coating on the free shaft ends. The guarantee period commences on the date of delivery.

For longer periods of storage (> 24 months) we advise regular checking and, if necessary, renewal of the interior corrosion protection (see section 7 ”Start-up”).

5. Technical description

Note: Observe the ”Safety notes” in section 3.

5.1 General description

The gear unit supplied is a three or four stage helical gear unit. It is designed for installation in the horizontal position. If necessary, it can also be designed for installation in a different position.

It can be operated in both directions of rotation.

A number of shaft configurations (types and rotation directions) are possible. These are shown in the following table as solid shafts:

Type	Configuration								
	A	B	C	D	E	F	G	H	I
K3SH K3VH K3HH K3HM K3KH K3KM K3DH K3DM	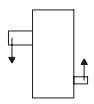	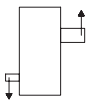	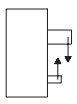	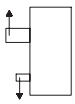	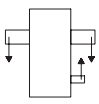	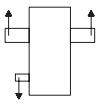	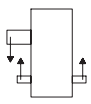	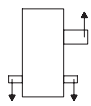	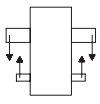
K4SH K4VH K4HH K4HM K4KH K4KM K4DH K4DM	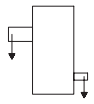	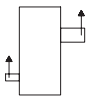	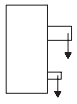	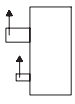	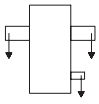	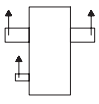	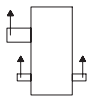	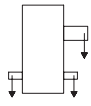	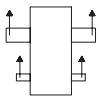

The gear units are characterised by a low noise level. This is achieved by helical gears with a high contact ratio and special sound–damping housings.

The good temperature characteristics of the gear unit are achieved by its high degree of efficiency and its large housing surface area.

Note: Unless otherwise agreed by contract, the gear units must not be exposed to harmful environmental factors such as chemical products, high-air pollution and temperatures outside the range 0 to +20 °C.

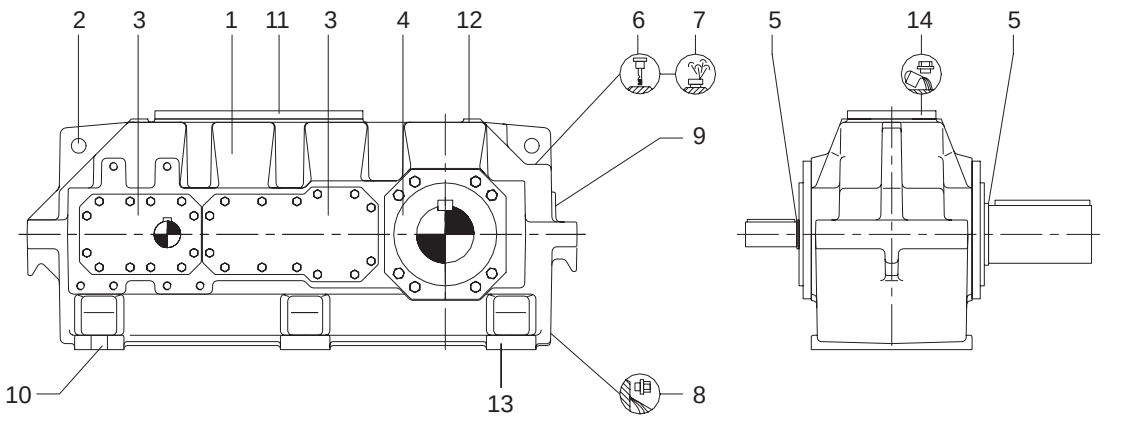

K..H

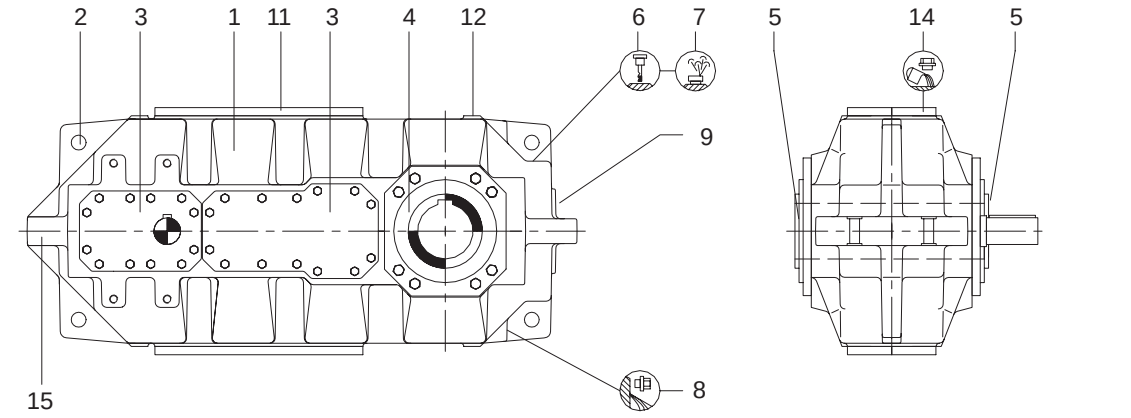

K..M

1	Housing	9	Rating plate
2	Lifting eyes	10	Gear-unit fastening
3	Cover	11	Inspection cover
4	Cover	12	Alignment surfaces
5	Shaft seals	13	Alignment thread
6	Oil dipstick	14	Oil inlet
7	Housing ventilation	15	Fastening for torque arm
8	Oil drain plug		

Output types

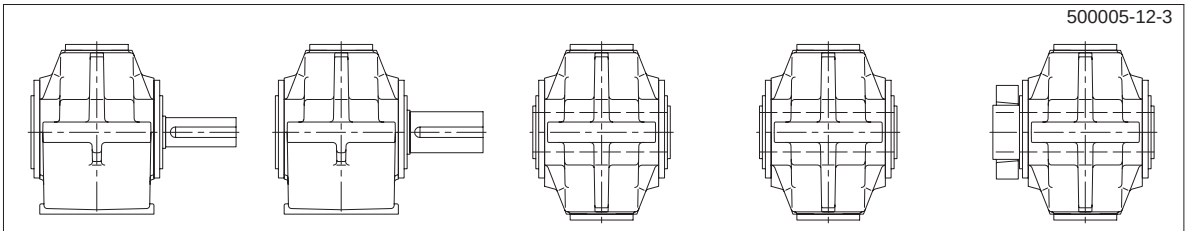

..S.	**..V.**	**..H.**	**..K.**	**..D.**
Solid shaft	Reinforced solid shaft	Hollow shaft with parallel-keyway	Hollow shaft with internal spline to DIN 5480	Hollow shaft for shrink disk

For a detailed illustration of the gear unit, refer to the drawings in the unit documentation.

5.2 Housing

The housings are of cast iron. If required, it may also be of steel.

The housing is in two parts. It is rigid in design and due to its form has excellent noise and temperature characteristics.

The housing is fitted with adequately dimensioned lifting eyes and inspection covers.

It is also fitted with a dipstick for checking the oil level, a draining screw for oil change and a venting screw.

Colour codes for venting, oil inlet, oil level and oil drainage:

Venting:	yellow	
Oil inlet:	yellow	
Oil level:	red	
Lubrication points:	red	
Oil drain:	white	

5.3 Toothed components

The toothed components of the gear unit are case hardened. Helical-gear teeth are ground. The high quality of the teeth lead to a significant noise reduction and ensure safe and reliable running.

The gear wheels are joined to the shafts by interference fitting and parallel keys. These types of joints transmit the torques generated with adequate reliability.

5.4 Lubrication

The teeth and bearings are supplied with oil with the help of the gear wheels in a splash lubrication system. This means that the gear units require very little maintenance.

5.5 Bearings

All shafts are mounted on anti-friction bearings.

5.6 Shaft seals

Depending on requirements, radial shaft sealing rings or Taconite seals are mounted at the shaft exits to prevent oil from leaking from the housing and dirt from entering it.

5.6.1 Radial shaft sealing rings

Radial shaft sealing rings are the standard type of seal. They are fitted with an additional dust lip to protect the actual sealing lip from external contamination.

500005-10-10

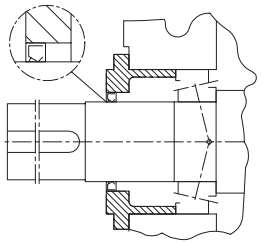

5.6.2 Taconite seals

Taconite seals were specially developed for use in a dusty environment. The penetration of dust is prevented by a combination of seal elements (radial shaft sealing ring, lamellar seal and grease-charged labyrinth seal).

500005-10-12

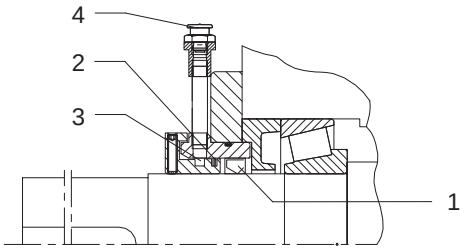

1 Radial shaft sealing ring
2 Lamellar seal
3 Grease-charged labyrinth seal (re-chargable)
4 Flat grease nipple AM10x1 to DIN 3404

Taconite seals are divided into the following types:

500005-10-13

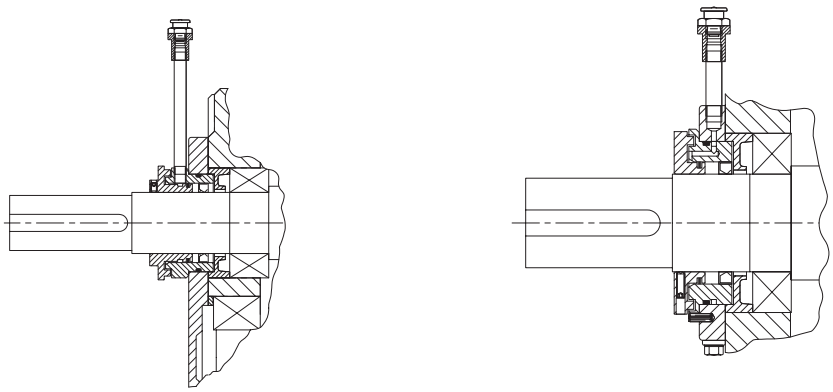

Taconite “E” **Taconite “F”**

500005-10-14

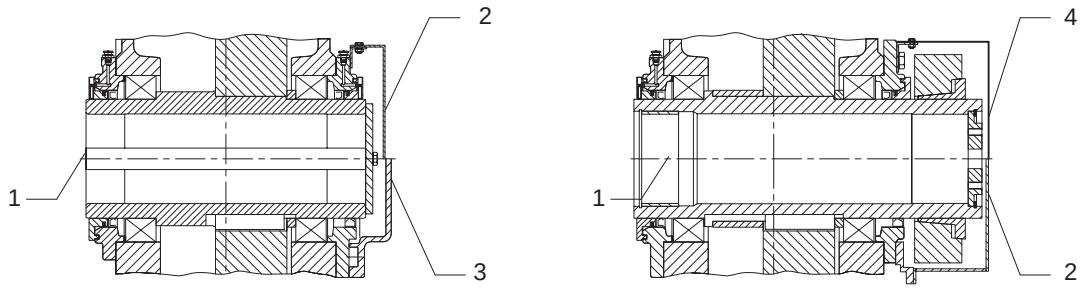

Taconite “F-F” and “F-H” **Taconite “F-K” and “F-F”**

1 Output
2 Taconite ”F-F”
3 Taconite ”F-H”
4 Taconite ”F-K”

Taconite type	Application	Remarks
“E”	All input shafts	Re-chargeable labyrinth
“F”	Output shaft Type S (solid shaft)	
“F-F”	Output shaft Type H (hollow shaft with parallel-keyway) Type K (hollow shaft with internal spline to DIN 5480) Type D (hollow shaft for shrink disk)	Labyrinth re-chargeable on both sides, incl. cowl to prevent contact on gear side facing away from output
”F-H”	Output shaft Type H (hollow shaft with parallel-keyway) Type K (hollow shaft with internal spline to DIN 5480)	Re-chargeable labyrinth on output side; dustproof cowl on opposite side
“F-K”	Output shaft Type D (hollow shaft for shrink disk)	

Note: For re-charging the labyrinth seals with grease, the specified frequency must be observed (see section 10 ”Maintenance and repair”).

5.7 Cooling

The gear unit is designed for intermittent operation. This means that, in general, an additional cooling system is not required. For alternating operating conditions, the gear unit is fitted with a separately supplied oil-supply unit. In the case of separate oil-supply units, the specific instructions for these units must be observed.

5.8 Couplings

Generally speaking, flexible couplings or hydraulic couplings combined with flexible couplings should be provided for the input drive.

For gear units fitted with solid output shafts (types ..S. and ..V.) flexible couplings are also provided in most cases.

If rigid couplings or other input or output elements are being used which give rise to additional radial or axial forces (e.g. gear wheels, belt pulleys, brake disks, rope drums), these must be agreed by contract.

Caution! **Couplings with peripheral velocities on the outer diameter of up to 30 m/s, must be statically balanced. Couplings with peripheral velocities over 30 m/s, must be dynamically balanced.**

For maintenance and operation of the couplings, refer to the specific operating instructions for the coupling.

Note: When installing the drive system, the individual components must be very precisely aligned with one another in order to minimise restoring forces caused by angle and shaft offset, and avoid premature wear to flexible coupling components.

For gear units with hollow output shaft, the coupling on the output side is not required. Gear units with hollow output shafts should be mounted on the shaft of the customer's machinery.

6. Assembly

Note: Observe the "Safety notes" in section 3.

6.1 General information on installation

Assembly and installation work must be done with great care by trained and qualified personnel. The manufacturer cannot be held liable for damage caused by incorrect assembly and installation.

During the planning phase, sufficient space should be allowed around the gear unit for subsequent care and maintenance work.

If the gear unit is fitted with a fan, there should be sufficient space for air intake.

Caution! **Exposure to direct sunlight may cause overheating. Protective features such as covers, roofing etc. should be provided as required.**

Sufficient lifting equipment should be available before beginning the installation and assembly work.

Caution! **No welding work should be done on the drive.**
The drives must not be used as an earthing point for welding operations. Delicate teeth and bearings may be irreparably damaged by welding.

Caution! **All the fastening points provided by the design of the unit should be used.**

To ensure proper lubrication, the installation position specified in the order must always be observed.

6.2 Installation of gear unit on housing base

6.2.1 Foundation

The foundation must be horizontal and level.

It should be designed in such a way that no resonance vibrations are created and that no vibrations are transmitted from adjacent foundations. The structure on which the unit is to be mounted, must be rigid. It must be designed according to the weight and torque, taking into account the forces acting on the gear unit.

The unit must be carefully aligned with the motor on the input and output sides. Possible strain deformations due to operating forces must be taken into account.

Hexagon bolts and nuts should be tensioned to the specified torque. For the correct torque, refer to point 10.2.7. We recommend bolts of strength class 8.8.

When external forces are applied to the gear unit, it is advisable to use lateral stops to prevent it from shifting.

Note: For dimensions, space requirement, arrangement of supply connections (e.g. with separate oil-cooling units), refer to the drawings in the gear-unit documentation.

6.2.2 Description of installation work

- Remove the anti-corrosion paint on the shafts with benzine.

Caution! **Do not allow the benzine to contact the shaft sealing rings.**

⚠ **Ensure adequate ventilation. Do not smoke when working with benzine! Explosion hazard!**

- Mount and secure input and output drive elements (e.g. coupling components) on shafts. These should be heated before mounting. For the correct joining temperatures, refer to the dimensional drawings in the coupling documentation.

Unless otherwise instructed, the components may be heated inductively, with a burner or in a furnace.

⚠ **Take precautions to avoid burns from hot components!**

Caution! **Protect shaft sealing rings from damage and heating over +100 °C. Use heat-protection screens to reduce radiant heat.**

Caution! **The coupling components should be fitted using suitable equipment to avoid possible damage to the shaft bearings through axial joining forces.**
Always use suitable lifting equipment.
When fitting the components, ensure that the shaft sealing rings and running surface are not damaged.

The components should be pushed smartly onto the shaft, up to the position specified in the order specific dimensional drawing.

Caution! **Fit the coupling using suitable fitting equipment. Never use force or knock the couplings into position, as this will cause irreparable damage to the gearwheels, anti-friction bearings, retaining rings etc.**

Note: Gear units whose weight requires the use of lifting gear must be attached at the points shown in section 4 ”Handling and storage”. When additional components are mounted on the gear unit, appropriate attachment points should be provided in accordance with the order-specific dimensional drawing.

6.2.2.1 Aligning surfaces, aligning thread

For preliminary alignment of the gear unit in the horizontal direction, use the machined surfaces on the top of the housing.

To assist in aligning, gear units of sizes 13 to 14 are fitted with additional alignment threads in the housing base.

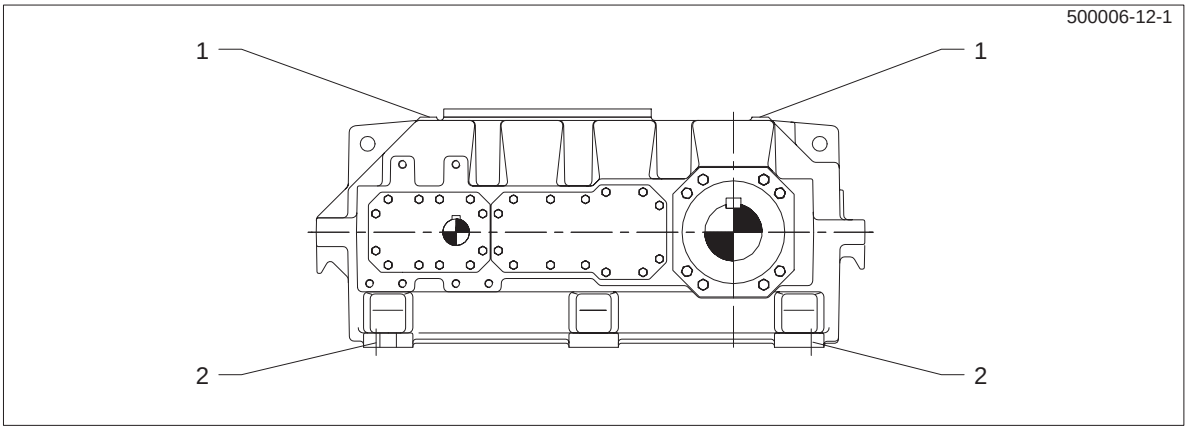

1 Alignment surfaces

2 Alignment thread

The final fine alignment with the assemblies on the output side must be carried out accurately to the shaft axes using:

- rulers
- spirit level
- dial gauge
- feeler gauge etc.

The gear unit can now be fixed in its position.

Note: The accuracy of the alignment process is an important factor in determining the life span of shafts, bearings and couplings. If possible, the deviation should be zero. For the special requirements for the couplings, refer to the specific operating instructions.

6.2.2.2 Mounting on a foundation frame

- Clean the lower surfaces of the gear-unit base.
- With suitable lifting gear, place the gear unit on the foundation frame.
- Tighten the foundation bolts to the specified torque (see point 10.2.7). If necessary use stops to prevent shifting.

Caution! **The gear unit must not be twisted when tensioning the fastening bolts.**

6.3 Assembly of a shaft-mounting gear unit with hollow shaft and parallel-keyway

6.3.1 Assembly

- Remove the anti-corrosion paint from the hollow shaft and machine shaft with benzine.

Caution! **Do not allow the benzine to contact the shaft sealing rings.**

⚠ **Ensure adequate ventilation. Do not smoke when working with benzine! Danger of explosion.**

- Check the hollow and machine shafts to ensure that seat and edges are not damaged. If necessary, rework the parts with a suitable tool and clean them again.

Coat with a suitable lubricant (e.g. Calypsol grease type H 443 HD88) to prevent frictional corrosion of the contact surfaces.

6.3.1.1 Fitting

- Fit the gear unit by means of nut and threaded spindle. The counter force is provided by the hollow shaft.

Caution! **The hollow shaft must be exactly aligned with the machine shaft to avoid canting.**

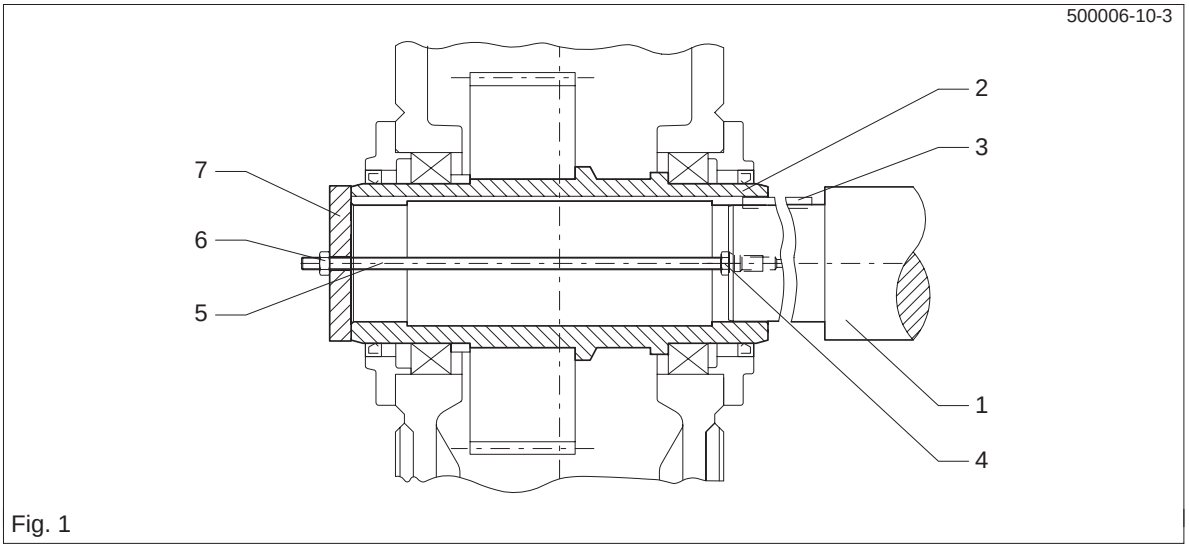

Fig. 1

1	Machine shaft	4	Nut	7	End plate
2	Hollow shaft	5	Threaded spindle		
3	Parallel key	6	Nut		

Instead of the nut and threaded spindle shown in the diagram, other types of equipment such as a hydraulic lifting equipment (type Lucas) may be used.

6.3.1.2 Axial securing device

Depending on type, secure the hollow shaft axially on the machine shaft (e.g. with circlip, end plate, set screw etc.).

6.3.2 Dismantling

- Remove the axial securing device from the hollow shaft.
- If frictional corrosion has formed on the seating surfaces, press rust-releasing or other agent (e.g. with a pump) into the bore cavity to reach the seats. The rust releaser is forced in through the bores in the machine shaft (see fig. 2) or end plate (fig. 3).
- Depending on the facilities available, the gear unit can be forced off the shaft on site using forcing screws in an end plate (see fig. 3), a central threaded spindle or a Lucas hydraulic lifting unit.
- When the rust-releasing agent has taken effect, pull the gear unit off with the device as shown in figs. 2 or 3.

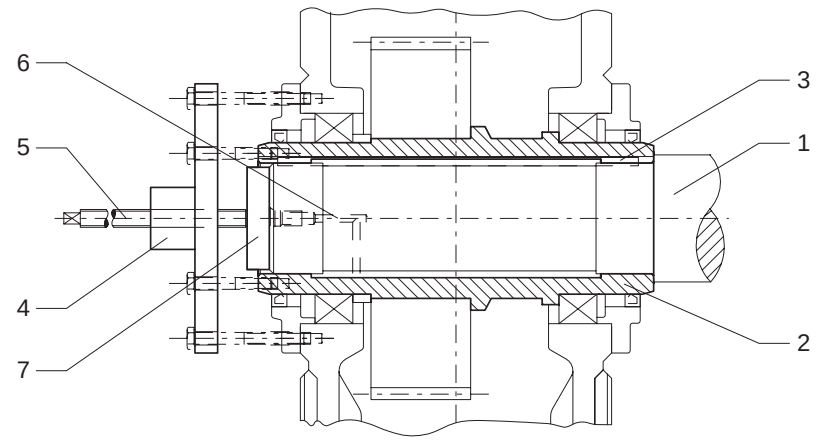

Fig. 2

1 Machine shaft
2 Hollow shaft
3 Parallel key
4 Hydraulic lifting unit
5 Threaded spindle
6 Bore for rust-releasing agent
7 Plate for forcing out

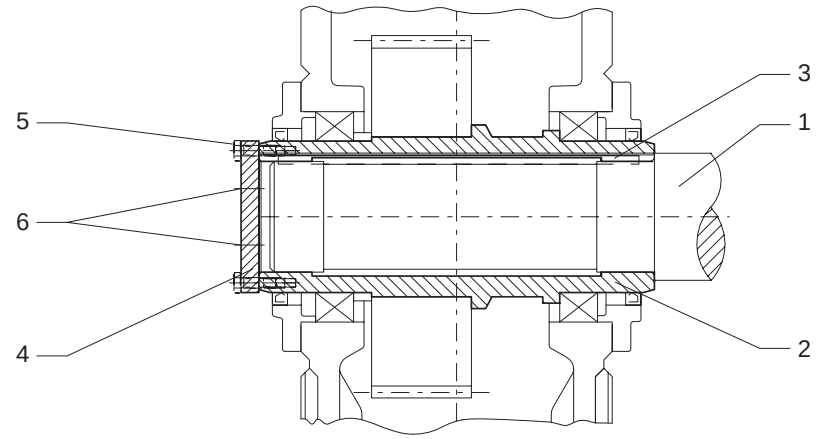

Fig. 3

1 Machine shaft
2 Hollow shaft
3 Parallel key
4 End plate
5 Seal
6 Bore for rust-releasing agent

Caution! **Avoid twisting or canting when pulling the unit off.**

Caution! **If the counter force is provided not only by the hollow shaft, but by the housing also, as shown in fig. 2, the forces used must not exceed the values given in the following table.**

Gear-unit size	Maximum force N	Gear-unit size	Maximum force N
5	33000	10	82000
6	37500	11	97200
7	50000	12	113600
8	56000	13	140000
9	65000	14	160000

Table 6.1: Maximum press-off forces

Caution! **If the above figures are exceeded, the hollow-shaft bearings or other gear components may be irreparably damaged. Before replacing the gear unit on the machine shaft, always check the bearings for any signs of damage.**

Note: When using forcing screws or threaded spindles, the head of the thread pushing against the working machine should be rounded and well greased to reduce the risk of seizing at this point.

6.4 Shaft-mounting gear unit with hollow shaft and internal spline to DIN 5480

6.4.1 Assembly

- Remove the anti-corrosion paint from the hollow shaft and machine shaft with benzine.

Caution! **Do not allow the benzine to contact the shaft sealing rings.**

⚠ **Ensure adequate ventilation. Do not smoke when working with benzine! Danger of explosion.**

- Check the hollow and machine shafts to ensure that seats, teeth or edges are not damaged. If necessary, rework the parts with a suitable tool and clean them again.

Coat with a suitable lubricant (e.g. Calypsol grease type H 443 HD88) to prevent frictional corrosion of the contact surfaces.

6.4.1.1 Fitting

- Fitting with integrated DU bush
- Fit the gear unit by means of nut and threaded spindle. The counter force is provided by the hollow shaft.

Caution! **The hollow shaft must be exactly aligned with the machine shaft to avoid canting. When fitting, ensure that the position of the teeth between the machine shaft and hollow shaft is correct. The correct position can be determined by turning the input shaft or by swivelling the gear unit lightly around the hollow shaft.**

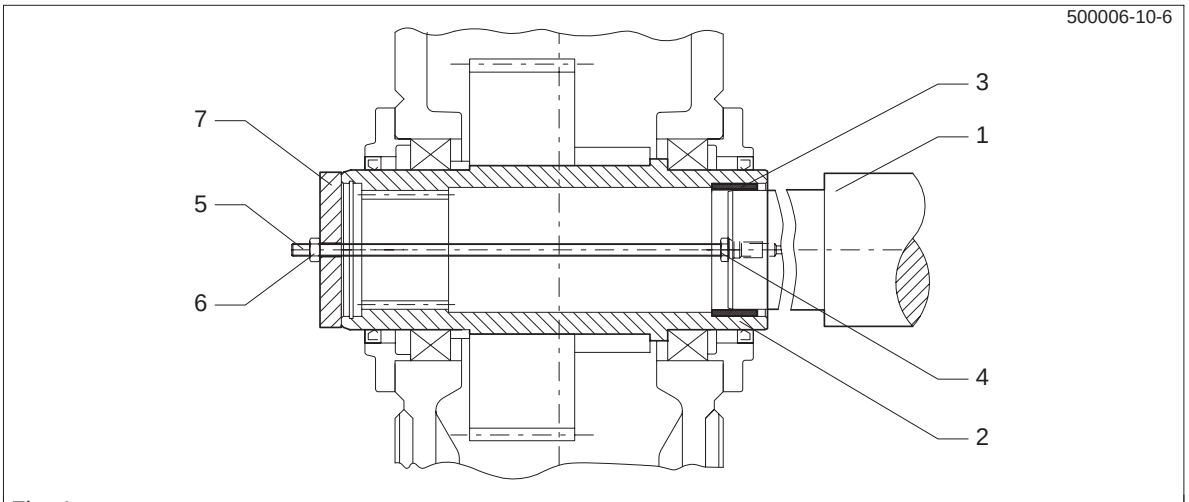

Fig. 4

1	Machine shaft	4	Nut	7	End plate
2	Hollow shaft	5	Threaded spindle		
3	DU bush	6	Nut		

- Fitting with loose DU bush

The loose DU bush is pushed onto the machine shaft, fixed rigidly in position with a locating tie and then pulled into the hollow shaft along with the machine shaft (see fig. 4).

Caution! **The hollow shaft must be exactly aligned with the machine shaft to avoid canting. When fitting, ensure that the position of the teeth between the machine shaft and hollow shaft is correct. The correct position can be determined by turning the input shaft or by swivelling the gear unit lightly around the hollow shaft.**

Instead of the nut and threaded spindle shown in the diagram, other types of equipment such as a hydraulic lifting equipment (type Lucas) may be used.

6.4.1.2 Axial securing device

Depending on type, secure the hollow shaft axially on the machine shaft (e.g. with circlip, end plate, set screw etc.).

6.4.2 Dismantling

- Remove the axial securing device from the hollow shaft.
- If frictional corrosion has formed on the seating surfaces, press rust-releasing or other agent (e.g. with a pump) into the bore cavity to reach the seats. The rust releaser is forced in through the bores in the machine shaft (see fig. 5) or end plate (fig. 6).
- Depending on the facilities available, the gear unit can be forced off the shaft on site using forcing screws in an end plate (see fig. 6), a central threaded spindle or a Lucas hydraulic lifting unit.
- When the rust-releasing agent has taken effect, pull the gear unit off with the device as shown in figs. 5 or 6.

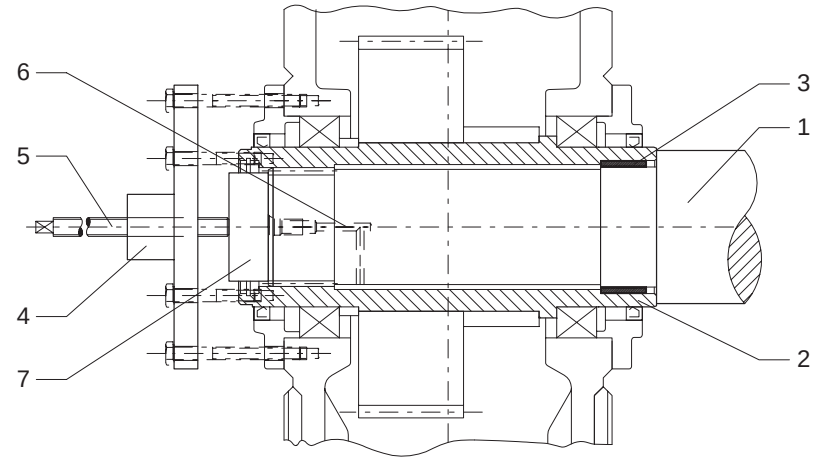

Fig. 5

1 Machine shaft
2 Hollow shaft
3 DU bush
4 Hydraulic lifting unit
5 Threaded spindle
6 Bore for rust-releasing agent
7 Plate for forcing out

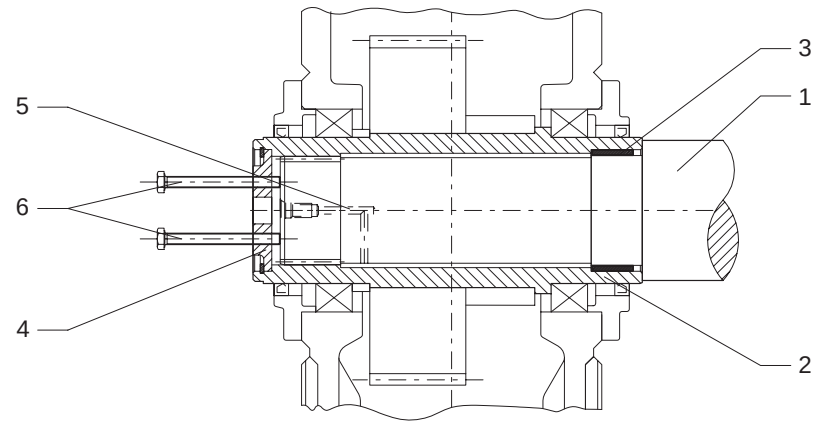

Fig. 6

1 Machine shaft
2 Hollow shaft
3 DU bush
4 End plate
5 Bore for rust-releasing agent
6 Forcing screws

Caution! **Avoid twisting or canting when pulling the unit off.**

Caution! **If the counter force is provided not only by the hollow shaft, but by the housing also, as shown in fig. 5, the forces used must not exceed the values given in the following table.**

Gear-unit size	Maximum force N	Gear-unit size	Maximum force N
5	33000	10	82000
6	37500	11	97200
7	50000	12	113600
8	56000	13	140000
9	65000	14	160000

Table 6.2: Maximum press-off forces

Caution! **If the above figures are exceeded, the hollow-shaft bearings or other gear components may be irreparably damaged. Before replacing the gear unit on the machine shaft, always check the bearings for any signs of damage.**

Note: When using forcing screws or threaded spindles, the head of the thread pushing against the working machine should be rounded and well greased to reduce the risk of seizing at this point.

6.5 Shaft-mounting gear unit with hollow shaft and shrink disk

6.5.1 Assembly

- Remove the anti-corrosion paint from the hollow shaft and machine shaft with benzine.

Caution! **Do not allow the benzine to contact the shaft sealing rings.**

⚠ **Ensure adequate ventilation. Do not smoke when working with benzine! Danger of explosion.**

- Check the hollow and machine shafts to ensure that seat and edges are not damaged. If necessary, rework the parts with a suitable tool and clean them again.

Caution! **The bore of the hollow shaft and the machine shaft must be absolutely free of grease in the area of the shrink-disk seat.**
This is essential for safe and reliable torque transmission.
Do not use contaminated solvents or dirty cloths for removing grease.

6.5.1.1 Fitting

- Fitting with integrated DU bush
- Fit the gear unit by means of nut and threaded spindle. The counter force is provided by the hollow shaft.

Caution! **The hollow shaft must be exactly aligned with the machine shaft to avoid canting.**

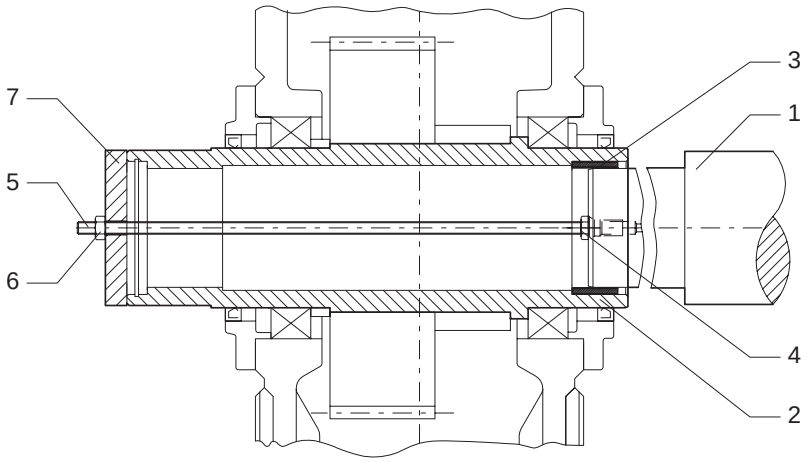

Fig. 7

1	Machine shaft	4	Nut	7	End plate
2	Hollow shaft	5	Threaded spindle		
3	DU bush	6	Nut		

- Fitting with loose DU bush

The loose DU bush is pushed onto the machine shaft, fixed rigidly in position with a locating tie and then pulled into the hollow shaft along with the machine shaft (see fig. 7).

Caution! **The hollow shaft must be exactly aligned with the machine shaft to avoid canting.**

Instead of the nut and threaded spindle shown in the diagram, other types of equipment such as a hydraulic lifting equipment (type Lucas) may be used.

6.5.1.2 Axial securing device

If the shrink disk is fitted according to instructions, the gear unit is fixed securely in the axial direction. Additional securing is not required.

6.5.2 Shrink disk type HSD

6.5.2.1 Assembly of shrink disk

The shrink disk is delivered ready for installation.

Caution! **It must not be dismantled before tensioning for the first time.**

Caution! **The bore of the hollow shaft and the machine shaft must be absolutely free of grease in the area of the shrink-disk seat.**
This is essential for safe and reliable torque transmission.
Do not use contaminated solvents or dirty cloths for removing grease.

Fig.-schrumpf-1

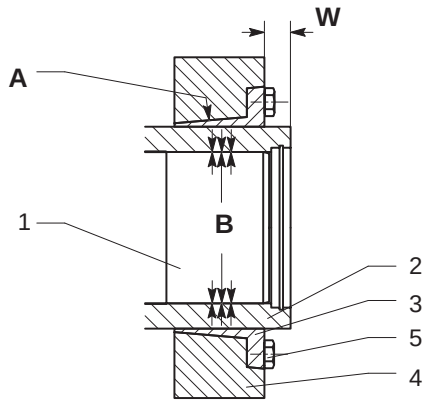

A Greased **B** Absolutely grease-free **W** Installation height

1	Machine shaft	3	Inner ring	5	Tensioning bolt
2	Hollow shaft	4	Outer ring		

For the exact installation height (W) of the shrink disk, refer to the dimensional drawing (see section 1 ”Technical data”)

Note: The outer surface of the hollow shaft may be greased in the area of the shrink-disk seat.

Caution! **Do not tighten the tensioning bolts until the machine shaft is installed.**

Tighten all the tensioning bolts gradually one after the other, working round several times.

Caution! **Do not tighten diametrically opposite bolts one after the other.**

Tighten the tensioning bolts until the front surfaces of the inner and outer rings are aligned.

Note: This allows the tension state to be checked visually.

Caution! **To avoid overloading the individual bolts, the maximum tensioning torque (see table) must never be exceeded. The alignment of the front surfaces has priority. If they cannot be aligned by tightening, consult the manufacturer.**

Tensioning-bolt thread	Max. tensioning torque per bolt (with μ = 0.1)	
	Strength class 10.9 Nm	Strength class 12.9 Nm
M 12	100	121
M 14	160	193
M 16	240	295
M 20	470	570

Table 6.3: Maximum torques for tensioning bolts

Replace the protective cowl.

6.5.2.2 Removing the shrink disk

The loosening process is similar to that of tightening.

Loosen the tensioning bolts gradually one after the other, working round several times.

If the outer ring does not release from the inner ring, several tensioning bolts can be removed and then screwed into adjacent forcing threads.

The rings can then be released without difficulty.

Pull the shrink disk off the hollow shaft.

6.5.2.3 Cleaning and greasing the shrink disk

Shrink disks do not have to be dismantled and re-greased before being re-installed.

The shrink disk should only be dismantled and cleaned if it is dirty.

Caution! **Following cleaning, only the inner sliding surfaces of the shrink disk should be re-greased.**

Use a solid grease with a coefficient of friction of μ = 0.04 as shown in the following table.

Grease	Form	Manufacturer
Molykote 321 R (lubricating paint)	Spray	DOW Corning
Molykote Spray (powder spray)	Spray	DOW Corning
Molykote G Rapid	Spray or Paste	DOW Corning
Aemasol MO 19 P	Spray or Paste	A. C. Matthes
Molykombin UMFT 1	Spray	Klüber Lubrication
Unimoly P 5	Powder	Klüber Lubrication

Table 6.4: Lubricants for shrink disk after cleaning

6.5.3 Dismantling

- If frictional corrosion has formed on the seating surfaces, press rust-releasing or other agent (e.g. with a pump) into the bore cavity to reach the seats. The rust releaser is forced in through the bores in the machine shaft (see fig. 8) or end plate (fig. 9).
- Depending on the facilities available, the gear unit can be forced off the shaft on site using forcing screws in an end plate (see fig. 9), a central threaded spindle or a Lucas hydraulic lifting unit.
- When the rust-releasing agent has taken effect, pull the gear unit off with the device as shown in figs. 8 or 9.

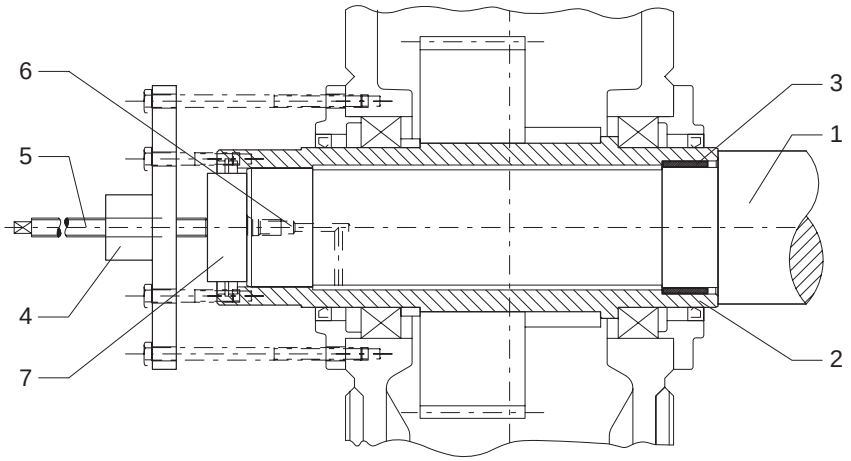

Fig. 8

1 Machine shaft
2 Hollow shaft
3 DU bush
4 Hydraulic lifting unit
5 Threaded spindle
6 Bore for rust-releasing agent
7 Plate for forcing out

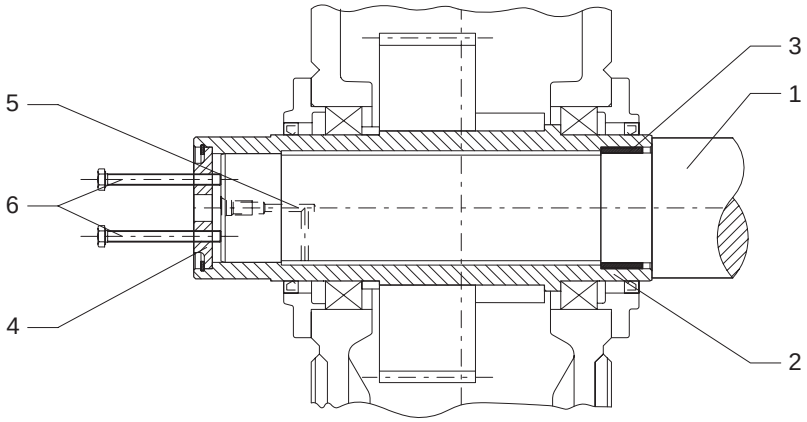

Fig. 9

1 Machine shaft
2 Hollow shaft
3 DU bush
4 End plate
5 Bore for rust-releasing agent
6 Forcing screws

Caution! **Avoid twisting or canting when pulling the unit off.**

Caution! **If the counter force is provided not only by the hollow shaft, but by the housing also, as shown in fig. 8, the forces used must not exceed the values given in the following table.**

Gear-unit size	Maximum force N	Gear-unit size	Maximum force N
5	33000	10	82000
6	37500	11	97200
7	50000	12	113600
8	56000	13	140000
9	65000	14	160000

Table 6.5: Maximum press-off forces

Caution! **If the above figures are exceeded, the hollow-shaft bearings or other gear components may be irreparably damaged. Before replacing the gear unit on the machine shaft, always check the bearings for any signs of damage.**

Note: When using forcing screws or threaded spindles, the head of the thread pushing against the working machine should be rounded and well greased to reduce the risk of seizing at this point.

6.6 Mounting the torque arm for gear housing

6.6.1 Attaching the torque arm

With types K..M, there are 2 holes on the input side of the housing for mounting the torque arm.

Caution! **The torque arm must be mounted stress-free on the machine side.**

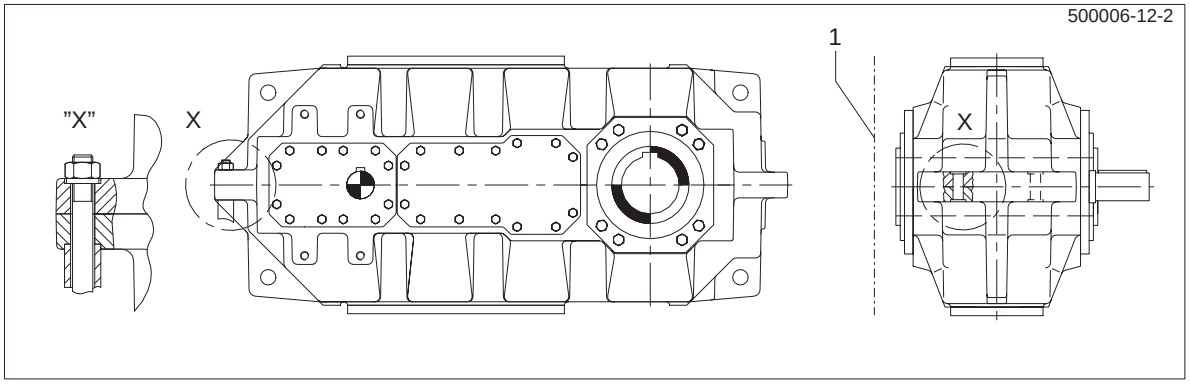

1 Machine side

Caution! **In the case of separately mounted gear units, it must be ensured that the gear unit is not subjected to external forces through possible displacement.**

The torque arm should be designed for the righting moment and the weight forces involved.

Note: It is not included in our delivery.

- Foundation type for fastening torque arm, see point 6.2.1 "Foundation".

7. Start-up

Note: Observe the ”Safety notes” in section 3.

7.1 Procedure before start-up

7.1.1 Removal of conservation agent

Unscrew oil drain plug and drain the conservation agent or running-in oil residues from the housing into a suitable container and dispose of in accordance with regulations, making sure also to open residual oil drain plugs, if any. The location of the oil draining point is marked by the symbol in the dimensional drawing in the unit documentation.

⚠ **Remove any oil spillage immediately with an oil-binding agent.**

- Replace the oil drain plug

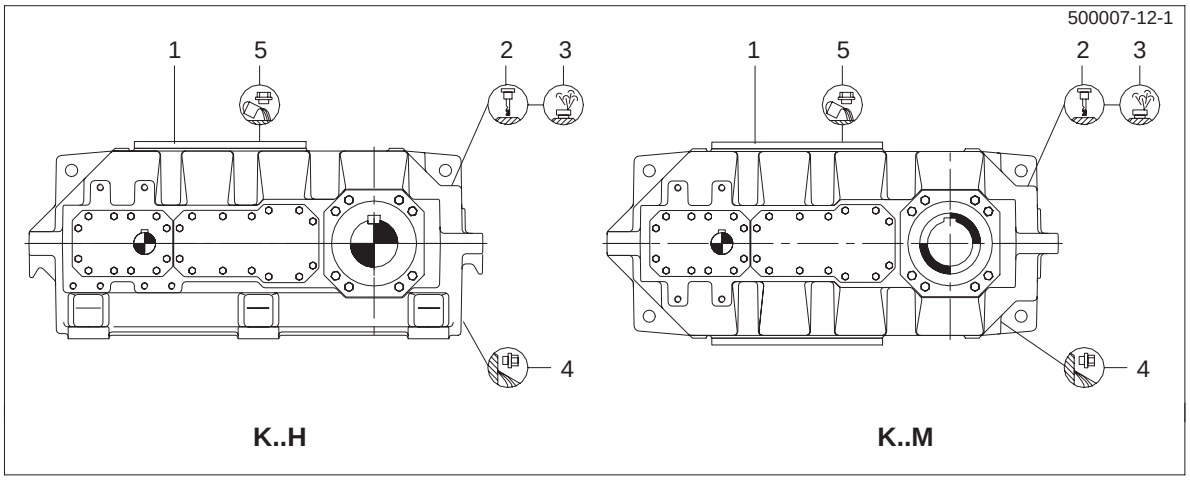

1	Inspection cover	3	Venting or plug screw	4	Oil drain plug
2	Oil dipstick			5	Oil inlet

For a detailed illustration of the gear unit, refer to the drawings in the unit documentation.

Caution! **Before start-up, replace the yellow plastic plug with venting screws with cap (see notice on gear unit).**

7.1.2 Charging with lubricant

- Release the fastening bolts on the inspection cover and remove the cover (including seal) from the housing. Do not discard the seal.

Caution! **Fill the gear unit with fresh oil using a filter (max. mesh 25 µm).**

Note: For the correct type of oil (of various brands) to be used refer to the operating instructions BA 7300 EN supplied separately.
Information on the type, viscosity and quantity of the oil is given on the rating plate on the gear unit.
The quantity of oil stated on the rating plate is an approximation only. The markings on the oil dipstick must **always** be observed.

- Check the oil level in the gear housing with the oil dipstick

Note: The oil level must be at the upper mark on the oil dipstick.

⚠ **Remove any oil spillage immediately with an oil-binding agent.**

- Place the inspection cover (including seal) on the housing and replace and tighten the fastening bolts (see point 10.2.7).

7.1.2.1 Oil quantities

Type	Oil quantity (approx.) in litres for size									
	5	**6**	**7**	**8**	**9**	**10**	**11**	**12**	**13**	**14**
K3SH, K3VH, K3HH ,K3KH, K3DH	20	24	32	40	50	60	85	115	135	170
K3HM, K3KM, K3DM	18	22	28	36	45	55	75	105	120	155
K4SH, K4VH, K4HH ,K4KH, K4DH	20	24	32	40	50	60	85	115	135	170
K4HM, K4KM, K4DM	18	22	28	36	45	55	75	105	120	155

Table 7.1: Approximate figures for required oil quantities in horizontal gear units

7.2 Start-up

- Check the oil level in the housing with the oil dipstick

Note: When the oil is cool, the level should be at the upper oil dipstick mark. When the oil is warm it may slightly exceed this mark. It must not be allowed to fall below the mark. If necessary, top up to the correct level.

7.3 Removal from service

- To take the gear unit out of service, first switch off the drive assembly.

⚠ **Secure the drive assembly to prevent it from being started up accidentally. Attach a warning notice to the start switch.**

- During longer periods of disuse, start the unit up briefly at intervals of approx. 3 weeks. If it is to remain out of service for longer than six months, fill it with conservation agent (see point 7.3.1).

7.3.1 Interior conservation during longer disuse

Depending on the type of lubrication or shaft sealing, the following types of internal corrosion protection can be used.

7.3.1.1 Interior conservation with gear oil

Gear units with splash-lubrication systems and contacting shaft seals can be filled with the correct type of service oil up to a point just below the venting screw.

7.3.1.2 Interior conservation with special conservation agent

Before longer periods of storage, gear units with non-contacting shaft seals should be allowed to idle with a charge of conservation agent.

Duration of protection	Conservation agent	Special measures
less than **24** months	Castrol Alpha SP 220 S	Close gear unit, replace venting screw or air filter with a yellow plug screw, (replace the original parts before start-up)
For storage periods longer than 24 months, renew the conservation agent. For storage periods over 36 months, FLENDER should be consulted.		

Table 7.2: Conservation procedure when using mineral oil or PAO-based synthetic oil

Duration of protection	Conservation agent	Special measures
less than **36** months	Special anti-corrosion oil TRIBOL 1390 1)	Close gear unit, replace venting screw or air filter with a yellow plug screw, (replace the original parts before start-up)
For storage periods over 36 months, FLENDER should be consulted.		

Table 7.3: Conservation procedure when using PG-based synthetic oil

1) Resistant to tropical conditions and sea water. Max. ambient temperature 50 °C

7.3.1.3 Interior conservation procedure

- Switch the gear unit off and drain the oil as described in section 10 ”Maintenance and repair”.
- Pour in the conservation agent given in Table 7.2 or 7.3 through the venting hole or the opening in the inspection cover until it reaches the top mark on the oil dipstick.
- Close the venting hole or the opening in the inspection cover.
- Start the gear unit and allow it to idle for a short time.
- Unscrew the oil drain plug and allow the conservation agent to drain into a suitable container and dispose of it according to regulation.

⚠ **The conservation agent emerging from the gear unit may be hot.**
Wear gloves to avoid scalding.

- Replace the oil drain plug.

Caution! **Before re-starting the gear unit, replace the plug screw with the venting screw or air filter.**
See also point 7.1.1

7.3.2 Exterior conservation

Duration of protection	Conservation agent	Layer thickness	Remarks
less than **12** months	Tectyl 846 K19	approx. 50 µm	Long-term wax-based conservation agent, resistant to sea water and tropical conditions, soluble in benzine

Table 7.4: Exterior protection of shaft ends and other bare surfaces

7.3.2.1 Exterior conservation procedure

- Clean the surfaces
- Apply grease to shaft-sealing rings to protect the sealing lips from conservation agent
- Apply conservation agent

8. Operation

Note: Observe the ”Safety notes” in section 3.

8.1 General operating data

During operation, the unit must be monitored for:

- overheating (In continuous operation, the gear unit is designed for a temperature of 90 °C with mineral oil. For higher temperatures, synthetic oils must be used. The maximum short-term operating temperature is 100 °C. See also section 10.)
- changes in running noise
- possible oil leakage at the housing and shaft seals

and

- correct oil level (see section 7 ”Start-up”)

Note: To check the oil level, stop operation of gear unit.
When the oil is warm it may slightly exceed the top mark of the oil dipstick. It must not be allowed to fall below the lower mark. If necessary, top up to the correct level.

Caution! **If any irregularities are noticed during operation, switch the drive assembly off at once. Determine the cause of the fault using the table in section 9.**
This table contains a list of possible faults, their causes and suggested remedies.
Should it not be possible to identify the cause, or the unit cannot be repaired with the facilities available, you are advised to contact one of our customer-service offices for specialist assistance. See section 11.

9. Disturbances, reasons and remedy

Note: Observe the ”Safety notes” in section 3.

9.1 General information on faults and malfunctions

Note: Faults and malfunctions occurring during the guarantee period and which require repair work on the gear unit, must be carried out only by FLENDER Customer Service. In the case of faults and malfunctions occurring after the guarantee period, and whose cause cannot be precisely identified, we advise our customers to contact our Customer Service.

Caution! **FLENDER will not be bound by the terms of the guarantee or otherwise be responsible in cases of improper use of the gear unit, modifications carried out without the consent of FLENDER, or use of spare parts not supplied by FLENDER.**

⚠ **To remedy faults and malfunctions, the gear unit must always be taken out of service.**
Secure the drive assembly to prevent it from being started up accidentally. Attach a warning notice to the start switch.

9.2 Possible faults

Malfunctions	Causes	Remedy
Changes in gear noise	Damage to gear teeth	Contact Customer Service. Check teeth on all components, replace any damaged parts.
	Excessive bearing play	Contact Customer Service. Adjust bearing play.
	Defective bearing	Contact Customer Service. Replace defective bearing.
Loud noises in area of gear-unit fastening	Fastening has worked loose	Tighten bolts / nuts to prescribed torque. Replace damaged bolts / nuts.
Increased temperature at bearing points	Oil level in housing too low	Check oil level at room temperature, top up if necessary
	Oil too old	Check date of last oil change, change oil if necessary. See section 10.
	Bearing defective	Contact Customer Service. Check bearings and replace if necessary
Gear unit is oily	Inadequate sealing of housing cover or joints	Seal joints
Oil leakage from gear unit	Inadequate sealing of housing cover or joints	Check seals, replace if necessary, seal joints
	Radial shaft sealing rings defective	Check radial shaft sealing rings, replace if necessary
Water in oil	Oil froths in sump	Check oil state using test-tube method for water contamination. Have oil analysed by laboratory.
	Gear unit exposed to cold air from machine-room ventilator causing condensation	Protect gear unit with suitable insulation. Close air outlet or alter its direction.
Operating temperature too high	Oil level in housing too high	Check oil level and adjust if necessary
	Oil too old	Check date of last oil change, change oil if necessary. See section 10.
	Oil contaminated	Change oil. See section 10.
Fault in oil-supply unit		Consult operating instructions for oil-supply unit

Table 9.1: Faults, causes and remedies

10. Maintenance and repair

Note: Observe the ”Safety notes” in section 3.

10.1 General notes on maintenance

Note: Maintenance and repair work should be done with great care by trained and qualified personnel only.

Caution! **The periods stated in table 10.1 depend on the conditions under which the gear unit is operated. For this reason only average figures can be given which refer to:**

a daily operating time of	**24 hours,**
a duty factor of	**100%,**
an input-drive speed of	**1500 1/min,**
and a maximum oil temperature of	**90 °C** (mineral oil only) **100 °C** (synthetic oil only)

Note: Under different conditions, the frequencies stated below should be adjusted accordingly.

Measures	Periods	Remarks
Check oil temperature	Daily	
Check for unusual gear unit noise	Daily	
Check oil level	Monthly	
Check gear unit for leaks	Monthly	
Test oil for water content	After 400 service hours, once per year at least	See point 10.2.1
First oil change after start-up	After 400 service hours	See point 10.2.2
Subsequent oil changes	Every 18 months or 5000 service hours 1)	See point 10.2.2
Clean venting screw	Every 3 months	See point 10.2.3
Re-grease Taconite seals	Every 3000 service hours, every 6 months at least	See point 10.2.4
Clean gear unit housing	Simultaneously with oil change	See point 10.2.5
Check tightness of fastening bolts	After first oil change, thereafter every second oil change	See point 10.2.7
Complete inspection of gear unit	Approx. every 2 years along with oil change	See point 10.2.8

Table 10.1: Maintenance and repair work

1) when using synthetic oils the periods can be tripled.

10.2 Description of maintenance and repair work

10.2.1 Test water-content of oil

For detailed information on testing the water-content of oil, apply to the lubricant manufacturer.

10.2.2 Changing the oil

Caution! **When changing the oil, always re-charge the gear unit with the same type of oil. Never mix different types of oil or oils made by different manufacturers. Never mix synthetic oils with mineral-based oils or with other synthetic oils. When changing from mineral-based oil to synthetic oil or from one type of synthetic oil to another, flush the gear unit well with the new type of oil beforehand.**

When changing the oil, the housing must be flushed with oil to remove sludge, metallic particles and oil residue. Use the same type of oil as is used for normal operation. High-viscosity oils should be heated beforehand. Ensure that all residues have been removed before filling with fresh oil.

Note: Drain the oil while it is still warm, i.e. immediately after switching the machinery off.

- Stop the gear unit by switching off the drive assembly

⚠ **Secure the drive assembly to prevent it from being started up accidentally. Attach a warning notice to the start switch.**

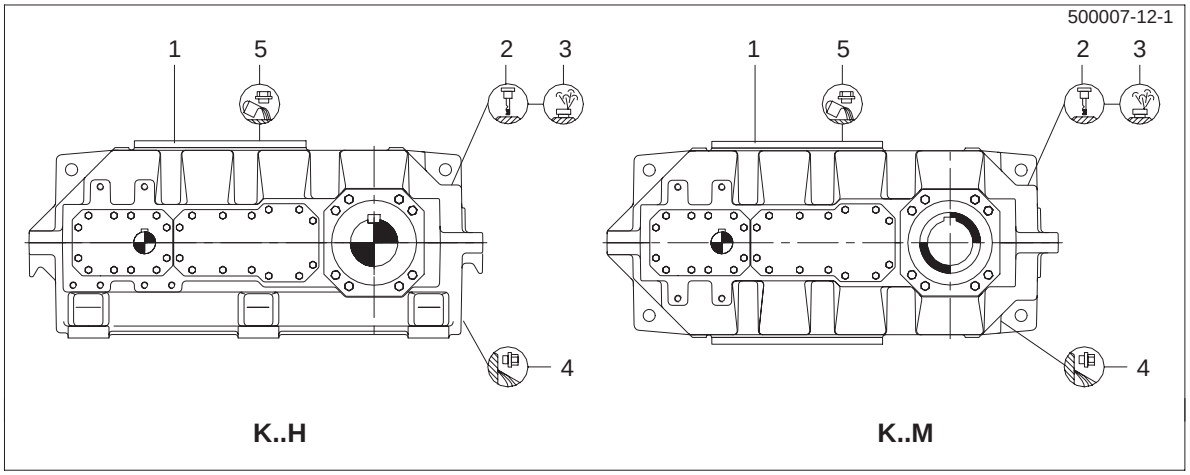

1	Inspection cover	3	Venting or plug screw	4	Oil drain plug
2	Oil dipstick			5	Oil inlet

For a detailed illustration of the gear unit, refer to the drawings in the unit documentation.

- Place a suitable container under the oil drain plug
- Remove the venting screw on the top of the housing
- Remove the oil drain plug and allow the oil to drain into the container

⚠ **The oil emerging from the housing is hot.**
Wear gloves to prevent scalding.
Remove any oil spillage immediately with an oil-binding agent.

- Clean the permanent magnet of the oil drain plug thoroughly
- Replace the oil drain plug

Note: Check the condition of the sealing ring (the sealing ring is vulcanised onto the oil drain plug). If necessary, use a new oil drain plug.

- Release the fastening bolts on the inspection cover and remove the cover (including seal) from the housing. Do not discard the seal

Caution! **Fill the gear unit with fresh oil using a filter (max. mesh 25 µm).**

Note: For the correct type of oil (of various brands) to be used refer to the operating instructions BA 7300 EN supplied separately.
Information on the type, quantity and viscosity of the oil is given on the rating plate on the gear unit.
The quantity of oil stated on the rating plate is an approximation only. The markings on the oil dipstick must **always** be observed.

- Check the oil level in the gear housing with the oil dipstick

Note: The oil level must be at the upper mark on the oil dipstick.

⚠ **Remove any oil spillage immediately with an oil-binding agent.**

- Place the inspection cover (including seal) on the housing and replace and tighten the fastening bolts (see point 10.2.7).

10.2.3 Cleaning the venting screw

Remove any dust which has collected on the venting screw. It should be cleaned at least every 3 months. To do this, the venting screw is removed, cleaned with benzine or similar agent and dried. It can also be cleaned by blowing out with compressed air.

10.2.4 Re-charging Taconite seals with grease

- Stop the gear unit by switching off the drive assembly

⚠ **Secure the drive assembly to prevent it from being started up accidentally. Attach a warning notice to the start switch.**

- Inject approx. 30 g lithium-based bearing grease into each of the lubrication points of the Taconite seal. The lubrication points are fitted with flat grease nipples type AM10x1 to DIN 3404.

⚠ **Remove and dispose of any old grease emerging from the seals.**

10.2.5 Cleaning the gear unit

- Stop the gear unit by switching off the drive assembly

⚠ **Secure the drive assembly to prevent it from being started up accidentally. Attach a warning notice to the start switch.**

- Remove any corrosion.

Caution! **Never clean the gear unit with high-pressure cleaning equipment.**

10.2.6 Topping up oil

- Stop the gear unit by switching off the drive assembly

Secure the drive assembly to prevent it from being started up accidentally. Attach a warning notice to the start switch.

- Release the fastening bolts on the inspection cover and remove the cover (including seal) from the housing. Do not discard the seal.

Caution! **Fill the gear unit with fresh oil using a filter (max. mesh 25 µm).**

Note: Always top up with the same type of oil as already in the gear unit (see point 10.2.2). Information on the type, quantity and viscosity of the oil is given on the rating plate on the gear unit.

- Check the oil level in the gear housing with the oil dipstick

Note: The oil level must be at the upper mark on the oil dipstick.

Remove any oil spillage immediately with an oil-binding agent.

- Place the inspection cover (including seal) on the housing and replace and tighten the fastening bolts (see point 10.2.7).

10.2.7 Check tightness of fastening bolts

- Stop the gear unit by switching off the drive assembly

Secure the drive assembly to prevent it from being started up accidentally. Attach a warning notice to the start switch.

- Check tightness of all fastening bolts with a torque wrench

Thread size	Strength class	Tightening torque (with µ = 0.20)
M 20	8.8	500 Nm
M 24	8.8	870 Nm
M 30	8.8	1750 Nm
M 36	8.8	3050 Nm
M 42	8.8	4950 Nm

Table 10.2: Tightening torques

Note: Damaged bolts should be replaced with new ones of the same type and strength class.

10.2.8 General inspection of gear unit

The general inspection of the gear unit should be carried out by the FLENDER Customer Service as our engineers have the experience and training necessary to identify any components requiring replacement.

10.3 Lubricants

The oil selected for use in the gear unit must be of the viscosity (VG class) stated on the rating plate. The viscosity class applies for the contractually agreed operating conditions.

FLENDER must be consulted for any change in operating conditions.

Note: For the correct type of oil (of various brands) to be used refer to the operating instructions BA 7300 EN supplied separately.

We are familiar with the composition of these lubricants and, as far as we are currently aware, they possess the properties with regard to bearing capacity, corrosion resistance, micropitting-bearing capacity and compatibility with seals and interior paint coatings which are necessary for the type of gear unit in question.

We therefore advise our customers to select one of the lubricants stated in the instructions BA 7300 EN, taking into account the VG class given on the rating plate.

Note: This recommendation is in no way intended as a guarantee for the quality of the lubricant supplied. Each lubricant manufacturer is responsible for the quality of his own product.

Should you not wish to follow our recommendation, you assume responsibility for the technical suitability of the lubricant used.

11. Spare parts, service facility addresses

11.1 Stocking spare parts

By stocking the most important spare and consumable parts on site, you can ensure that the gear unit is ready for use at any time.

To order spare parts, refer to the spare-parts list.

For further information, refer to the spare-parts drawing stated in the list.

We guarantee only the original list of spare parts supplied by us.

Caution! **Please note that spare parts and accessories not supplied by us have not been tested or approved by us. The installation or use of such products may therefore impair essential characteristics of the gear unit, thereby posing an active or passive risk to safety. FLENDER will assume no liability for damage caused by spare parts and accessories not supplied by FLENDER.**

Please note that certain components often have special production and supply specifications and that we supply you with spare parts which comply fully with the current state of technical development as well as current legislation.

When ordering spare parts always state the following:

Order no. / Item	Type / Size	Part no.	Quantity

11.2 Spare-part and service facility addresses

When ordering spare parts or the services of our specialist engineers, apply to FLENDER AG.

FLENDER Germany

A. FRIEDR. FLENDER AG
46393 Bocholt - Tel.: (0 28 71) 92-0 - Fax: (0 28 71) 92 25 96
E-mail: contact@flender.com • www.flender.com
Shipping address: Alfred - Flender - Strasse 77 - 46395 Bocholt

A. FRIEDR. FLENDER AG - Kupplungswerk Mussum
Industriepark Bocholt - Schlavenhorst 100 - 46395 Bocholt - Tel.: (0 28 71) 92 28 68 - Fax: (0 28 71) 92 25 79
E-mail: couplings@flender.com • www.flender.com

A. FRIEDR. FLENDER AG - Werk Friedrichsfeld
Am Industriepark 2 - 46562 Voerde - Tel.: (0 28 71) 92-0 - Fax: (0 28 71) 92 25 96
E-mail: contact@flender.com • www.flender.com

A. FRIEDR. FLENDER AG - Getriebewerk Penig
Thierbacher Strasse 24 - 09322 Penig - Tel.: (03 73 81) 60 - Fax: (03 73 81) 8 02 86
E-mail: ute.tappert@flender.com • www.flender.com

FLENDER - TÜBINGEN GMBH
72007 Tübingen - Tel.: (0 70 71) 7 07-0 - Fax: (0 70 71) 70 74 00
E-mail: sales-motox@flender-motox.com • www.flender.com
Shipping address: Bahnhofstrasse 40 - 72072 Tübingen

LOHER GMBH
94095 Ruhstorf - Tel.: (0 85 31) 3 90 - Fax: (0 85 31) 3 94 37
E-mail: info@loher.de • www.loher.de
Shipping address: Hans-Loher-Strasse 32 - 94099 Ruhstorf

FLENDER SERVICE GMBH
44607 Herne - Tel.: (0 23 23) 940-0 - Fax: (0 23 23) 940 333
E-mail: infos@flender-service.com • www.flender-service.com
24h Service Hotline +49 (0) 17 22 81 01 00
Shipping address: Südstrasse 111 - 44625 Herne

A. FRIEDR. FLENDER AG - FLENDER GUSS
Obere Hauptstrasse 228-230 - 09228 Chemnitz / Wittgensdorf - Tel.: (0 37 22) 64-0 - Fax: (0 37 22) 64 21 89
E-mail: flender.guss@flender-guss.com • www.flender-guss.de

Germany

A. FRIEDR. FLENDER AG
46393 BOCHOLT - TEL.: (0 28 71) 92 - 0 - FAX: (0 28 71) 92 25 96
SHIPPING ADDRESS: ALFRED - FLENDER - STRASSE 77 - 46395 BOCHOLT

E-mail: contact@flender.com • www.flender.com

VERTRIEBSZENTRUM BOCHOLT

46393 Bocholt
Alfred-Flender-Strasse 77, 46395 Bocholt
Tel.: (0 28 71) 92 - 0
Fax: (0 28 71) 92 - 14 35
E-mail: vz.bocholt@flender.com

VERTRIEBSZENTRUM STUTTGART

70472 Stuttgart
Friolzheimer Strasse 3, 70499 Stuttgart
Tel.: (07 11) 7 80 54 - 51
Fax: (07 11) 7 80 54 - 50
E-mail: vz.stuttgart@flender.com

VERTRIEBSZENTRUM MÜNCHEN

85750 Karlsfeld
Liebigstrasse 14, 85757 Karlsfeld
Tel.: (0 81 31) 90 03 - 0
Fax: (0 81 31) 90 03 - 33
E-mail: vz.muenchen@flender.com

VERTRIEBSZENTRUM BERLIN

Schlossallee 8, 13156 Berlin
Tel.: (0 30) 91 42 50 58
Fax: (0 30) 47 48 79 30
E-mail: vz.berlin@flender.com

FLENDER International

(2003-12-01)

E U R O P E

AUSTRIA
Flender Ges.m.b.H.
Industriezentrum Nö-Süd
Strasse 4, Objekt 14, Postfach 132
2355 Wiener Neudorf
Phone: +43 (0) 22 36 6 45 70
Fax: +43 (0) 22 36 6 45 70 10
E-mail: office@flender.at
www.flender.at

BELGIUM & LUXEMBOURG
N.V. Flender Belge S.A.
Cyriel Buyssestraat 130
1800 Vilvoorde
Phone: +32 (0) 2 - 2 53 10 30
Fax: +32 (0) 2 - 2 53 09 66
E-mail: sales@flender.be

BULGARIA
A. Friedr. Flender AG
Branch Office
c/o Auto - Profi GmbH
Alabin Str. 52, 1000 Sofia
Phone: +359 (0) 2 - 9 80 66 06
Fax: +359 (0) 2 - 9 80 33 01
E-mail: sofia@auto-profi.com

CROATIA / SLOVENIA
BOSNIA-HERZEGOVINA
A. Friedr. Flender AG
Branch Office
c/o HUM - Naklada d.o.o.
Mandroviceva 3, 10000 Zagreb
Phone: +385 (0) 1 - 2 30 60 25
Fax: +385 (0) 1 - 2 30 60 24
E-mail: flender@hi.hinet.hr

CZECH REPUBLIC
A. Friedr. Flender AG
Branch Office
Hotel DUO, Teplicka 17
19000 Praha 9
Phone: +420 (0) 2 - 83 88 23 00
Fax: +420 (0) 2 - 83 88 22 05
E-mail: flender_pumprla@hotelduo.cz

DENMARK
Flender Scandinavia A/S
Rugmarken 35 B, 3520 Farum
Phone: +45 - 70 22 60 03
Fax: +45 - 44 99 16 62
E-mail: kontakt@flenderscandinavia.com
www.flenderscandinavia.com

ESTHONIA / LATVIA / LITHUANIA
Flender Branch Office
Addinol Mineralöl Marketing OÜ
Suur-Söjamäe 32
11415 Tallinn / Esthonia
Phone: +372 (0) 6 - 27 99 99
Fax: +372 (0) 6 - 27 99 90
E-mail: flender@addinol.ee
www.addinol.ee

FINLAND
Flender Oy
Ruosilantie 2 B, 00390 Helsinki
Phone: +358 (0) 9 - 4 77 84 10
Fax: +358 (0) 9 - 4 36 14 10
E-mail: webmaster@flender.fi
www.flender.fi

FRANCE
Flender s.a.r.l.
3, rue Jean Monnet - B.P. 5
78996 Elancourt Cedex
Phone: +33 (0) 1 - 30 66 39 00
Fax: +33 (0) 1 - 30 66 35 13
E-mail: sales@flender.fr

SALES OFFICES:
Flender s.a.r.l.
36, rue Jean Broquin
69006 Lyon
Phone: +33 (0) 4 - 72 83 95 20
Fax: +33 (0) 4 - 72 83 95 39
E-mail: sales@flender.fr

Flender - Graffenstaden SA
1, rue du Vieux Moulin
67400 Illkirch-Graffenstaden
B.P. 84
67402 Illkirch - Graffenstaden
Phone: +33 (0) 3 - 88 67 60 00
Fax: +33 (0) 3 - 88 67 06 17
E-mail: flencomm@flender-graff.com

GREECE
Flender Hellas Ltd.
2, Delfon str., 11146 Athens
Phone: +30 210 - 2 91 72 80
Fax: +30 210 - 2 91 71 02
E-mail: flender@otenet.gr

Mangrinox S.A.
14, Grevenon str., 11855 Athens
Phone: +30 210 - 3 42 32 01
Fax: +30 210 - 3 45 99 28
E-mail: mangrinox@otenet.gr

HUNGARY
A. Friedr. Flender AG
Branch Office
Bécsi Út 3-5, 1023 Budapest
Phone: +36 (0) 1 - 3 45 07 90 / 91
Fax: +36 (0) 1 - 3 45 07 92
E-mail: jambor.laszlo@axelero.hu

ITALY
Flender Cigala S.p.A.
Parco Tecnologico Manzoni
Palazzina G
Viale delle industrie, 17
20040 Caponago (MI)
Phone: +39 (0) 02 - 95 96 31
Fax: +39 (0) 02 -95 74 39 30
E-mail: info@flendercigala.it

THE NETHERLANDS
Flender Nederland B.V.
Industrieterrein Lansinghage
Platinastraat 133
2718 ST Zoetermeer
Postbus 725
2700 AS Zoetermeer
Phone: +31 (0) 79 - 3 61 54 70
Fax: +31 (0) 79 - 3 61 54 69
E-mail: sales@flender.nl
www.flender.nl

SALES OFFICES:
Flender Nederland B.V.
Lage Brink 5-7
7317 BD Apeldoorn
Postbus 1073
7301 BH Apeldoorn
Phone: +31 (0) 55 - 5 27 50 00
Fax: +31 (0) 55 - 5 21 80 11
E-mail: tom.alberts@flender-group.com

Bruinhof B.V.
Boterdiep 37
3077 AW Rotterdam
Postbus 9607
3007 AP Rotterdam
Phone: +31 (0) 10 - 4 97 08 08
Fax: +31 (0) 10 - 4 82 43 50
E-mail: info@bruinhof.nl
www.bruinhof.nl

NORWAY
Elektroprosess AS
Frysjaveien 40, 0884 Oslo
Postboks 165, Kjelsås
0411 Oslo
Phone: +47 (0) 2 - 2 02 10 30
Fax: +47 (0) 2 - 2 02 10 50 / 51
E-mail: post@elektroprosess.no

POLAND
A. Friedr. Flender AG
Branch Office
Przedstawicielstwo w Polsce
ul. Wyzwolenia 27
43 - 190 Mikolów
Phone: +48 (0) 32 - 2 26 45 61
Fax: +48 (0) 32 - 2 26 45 62
E-mail: flender@pro.onet.pl
www.flender.pl

PORTUGAL
Rodamientos FEYC, S.A
R. Jaime Lopes Dias, 1668 CV
1750 - 124 Lissabon
Phone: +351 (0) 21 - 7 54 24 10
Fax: +351 (0) 21 - 7 54 24 19
E-mail: info@rfportugal.com

ROMANIA
A. Friedr. Flender AG
Branch Office
98 - 106, Soseaua Mihai Bravu
Sector 2, Bloc D 16, Sc 1, Apartament 4
021331 Bucuresti - 2
Phone: +40 (0) 21 - 4 91 10 08
Fax: +40 (0) 21 - 4 91 10 08
E-mail: flender@fx.ro

RUSSIA
F & F GmbH
Tjuschina 4-6
191119 St. Petersburg
Phone: +7 (0) 8 12 - 3 20 90 34
Fax: +7 (0) 8 12 - 3 40 27 60
E-mail: flendergus@mail.spbnit.ru

SLOVAKIA
A. Friedr. Flender AG
Branch Office
Vajanského 49
P.O. Box 286, 08001 Presov
Phone: +421 (0) 51 - 7 70 32 67
Fax: +421 (0) 51 - 7 70 32 67
E-mail: micenko.flender@nextra.sk

SPAIN
Flender Ibérica S.A.
Poligono Industrial San Marcos
Calle Morse, 31 (Parcela D-15)
28906 Getafe - Madrid
Phone: +34 (0) 91 - 6 83 61 86
Fax: +34 (0) 91 - 6 83 46 50
E-mail: f-iberica@flender.es
www.flender.es

SWEDEN
Flender Scandinavia
Äsenvägen 2
44339 Lerum
Phone: +46 (0) 302 - 1 25 90
Fax: +46 (0) 302 - 1 25 56
E-mail: kontakt@flenderscandinavia.com
www.flenderscandinavia.com

SWITZERLAND
Flender AG
Zeughausstr. 48
5600 Lenzburg
Phone: +41 (0) 62 8 85 76 00
Fax: +41 (0) 62 8 85 76 76
E-mail: info@flender.ch
www.flender.ch

TURKEY
Flender Güc Aktarma Sistemleri
Sanayi ve Ticaret Ltd. Sti.
IMES Sanayi, Sitesi
E Blok 502. Sokak No. 22
81260 Dudullu - Istanbul
Phone: +90 (0) 2 16 - 4 66 51 41
Fax: +90 (0) 2 16 3 64 59 13
E-mail: cuzkan@flendertr.com
www.flendertr.com

UKRAINE
A. Friedr. Flender AG
Branch Office, c/o DIV - Deutsche Industrie-
vertretung, Prospect Pobedy 44
252057 Kiev
Phone: +380 (0) 44 - 4 46 80 49
Fax: +380 (0) 44 - 2 30 29 30
E-mail: flender@div.kiev.ua

UNITED KINGDOM & EIRE
Flender Power Transmission Ltd.
Thornbury Works, Leeds Road
Bradford
West Yorkshire BD3 7EB
Phone: +44 (0) 12 74 65 77 00
Fax: +44 (0) 12 74 66 98 36
E-mail: flenders@flender-power.co.uk
www.flender-power.co.uk

SERBIA-MONTENEGRO
ALBANIA / MACEDONIA
A. Friedr. Flender AG
Branch Office
c/o G.P.Inzenjering d.o.o.
III Bulevar 54 / 19
11070 Novi Beograd
Phone: +381 (0) 11 - 60 44 73
Fax: +381 (0) 11 - 3 11 67 91
E-mail: flender@eunet.yu

A F R I C A

NORTH AFRICAN COUNTRIES
Please refer to Flender s.a.r.l.
3, rue Jean Monnet - B.P. 5
78996 Elancourt Cedex
Phone: +33 (0) 1 - 30 66 39 00
Fax: +33 (0) 1 - 30 66 35 13
E-mail: sales@flender.fr

EGYPT
Sons of Farid Hassanen
81 Matbaa Ahlia Street
Boulac 11221, Cairo
Phone: +20 (0) 2 - 5 75 15 44
Fax: +20 (0) 2 - 5 75 17 02
E-mail: hussein@sonfarid.com

SOUTH AFRICA
Flender Power Transmission (Pty.) Ltd.
Cnr. Furnace St & Quality Rd.
P.O. Box 131, Isando 1600
Johannesburg
Phone: +27 (0) 11 - 5 71 20 00
Fax: +27 (0) 11 - 3 92 24 34
E-mail: sales@flender.co.za
www.flender.co.za

SALES OFFICES:
Flender Power Transmission (Pty.) Ltd.
Unit 3 Marconi Park
9 Marconi Crescent, Montague Gardens
P.O. Box 37291
Chempet 7442, Cape Town
Phone: +27 (0) 21 - 5 51 50 03
Fax: +27 (0) 21 - 5 52 38 24
E-mail: sales@flender.co.za

Flender Power Transmission (Pty.) Ltd.
Unit 3 Goshawk Park
Falcon Industrial Estate
P.O. Box 1608
New Germany 3620, Durban
Phone: +27 (0) 31 - 7 05 38 92
Fax: +27 (0) 31 - 7 05 38 72
E-mail: sales@flender.co.za

Flender Power Transmission (Pty.) Ltd.
9 Industrial Crescent, Ext. 25
P.O. Box 17609, Witbank 1035
Phone: +27 (0) 13 - 6 92 34 38
Fax: +27 (0) 13 - 6 92 34 52
E-mail: sales@flender.co.za

Flender Power Transmission (Pty.) Ltd.
Unit 14 King Fisher Park, Alton
Cnr. Ceramic Curve & Alumina Allee
P.O. Box 101995
Meerensee 3901, Richards Bay
Phone: +27 (0) 35 - 7 51 15 63
Fax: +27 (0) 35 - 7 51 15 64
E-mail: sales@flender.co.za

A M E R I C A

ARGENTINA
Chilicote S.A.
Avda. Julio A. Roca 546
C 1067 ABN Buenos Aires
Phone: +54 (0) 11 - 43 31 66 10
Fax: +54 (0) 11 - 43 31 42 78
E-mail: chilicote@chilicote.com.ar

BRASIL
Flender Brasil Ltda.
Rua Quatorze, 60 - Cidade Industrial
32211 - 970, Contagem - MG
Phone: +55 (0) 31 - 33 69 21 00
Fax: +55 (0) 31 - 33 69 21 66
E-mail: vendas@flenderbrasil.com

SALES OFFICES:
Flender Brasil Ltda.
Rua James Watt, 142
conj. 142 - Brooklin Novo
04576 - 050, São Paulo - SP
Phone: +55 (0) 11 - 55 05 99 33
Fax: +55 (0) 11 - 55 05 30 10
E-mail: flesao@uol.com.br

Flender Brasil Ltda.
Rua Campos Salles, 1095
sala 04 - Centro 14015 - 110,
Ribeirão Preto - SP
Phone: +55 (0) 16 - 6 35 15 90
Fax: +55 (0) 16 - 6 35 11 05
E-mail: flender.ribpreto@uol.com.br

CANADA
Flender Power Transmission Inc.
215 Shields Court, Units 4 - 6
Markham, Ontario L3R 8V2
Phone: +1 (0) 9 05 - 3 05 10 21
Fax: +1 (0) 9 05 - 3 05 10 23
E-mail: flender@ca.inter.net
www.flenderpti.com

SALES OFFICE:
Flender Power Transmission Inc.
34992 Bemina Court
Abbotsford - Vancouver
B.C. V3G 1C2
Phone: +1 (0) 6 04 - 8 59 66 75
Fax: +1 (0) 6 04 - 8 59 68 78
E-mail: tvickers@rapidnet.net

CHILE / ARGENTINA / BOLIVIA
ECUADOR / PARAGUAY / URUGUAY
Flender Cono Sur Limitada
Avda. Galvarino Gallardo 1534
Providencia, Santiago
Phone: +56 (0) 2 - 2 35 32 49
Fax: +56 (0) 2 - 2 64 20 25
E-mail: flender@flender.cl
www.flender.cl

COLOMBIA
A.G.P. Representaciones Ltda.
Flender Liaison Office Colombia
Av Boyaca No 23A
50 Bodega UA 7-1, Bogotá
Phone: +57 (0) 1 - 5 70 63 53
Fax: +57 (0) 1 - 5 70 73 35
E-mail: aguerrero@agp.com.co
www.agp.com.co

MEXICO
Flender de Mexico S.A. de C.V.
17, Pte, 713 Centro
72000 Puebla
Phone: +52 (0) 2 22 - 2 37 19 00
Fax: +52 (0) 2 22 - 2 37 11 33
E-mail: szugasti@flendermexico.com
www.flendermexico.com

SALES OFFICES:
Flender de Mexico S.A. de C.V.
Lago Nargis No. 38
Col. Granada,
11520 Mexico, D.F.
Phone: +52 (0) 55 - 52 54 30 37
Fax: +52 (0) 55 - 55 31 69 39
E-mail: info@flendermexico.com

Flender de Mexico S.A. de C.V.
Ave. San Pedro No. 231-5
Col. Miravalle
64660 Monterrey, N.L.
Phone: +52 (0) 81 - 83 63 82 82
Fax: +52 (0) 81 - 83 63 82 83
E-mail: info@flendermexico.com

PERU
Potencia Industrial E.I.R.L.
Calle Victor González Olaechea N° 110
Urb. La Aurora - Miraflores,
P.O.Box: Av. 2 de Mayo N° 679
Of.108-Miraflores
Casilla N° 392, Lima 18
Phone: +51 (0) 1 - 2 42 84 68
Fax: +51 (0) 1 - 2 42 08 62
E-mail: cesarzam@chavin.rcp.net.pe

USA
Flender Corporation
950 Tollgate Road
P.O. Box 1449, Elgin, IL. 60123
Phone: +1 (0) 8 47 - 9 31 19 90
Fax: +1 (0) 8 47 - 9 31 07 11
E-mail: flender@flenderusa.com
www.flenderusa.com

Flender Corporation
Service Centers West
4234 Foster Ave.
Bakersfield, CA. 93308
Phone: +1 (0) 6 61 - 3 25 44 78
Fax: +1 (0) 6 61 - 3 25 44 70
E-mail: flender1@lightspeed.net

VENEZUELA
F. H. Transmisiones S.A.
Urbanización Buena Vista
Calle Johan Schafer o Segunda Calle
Municipio Sucre, Petare
Caracas
Phone: +58 (0) 2 - 21 52 61
Fax: +58 (0) 2 - 21 18 38
E-mail: fhtransm@telcel.net.ve
www.fhtransmisiones.com

A S I A

BANGLADESH / SRI LANKA
Please refer to Flender Limited
No. 2 St. George's Gate Road
5th Floor, Hastings
Kolkata - 700 022
Phone: +91 (0) 33 - 2 23 05 45
Fax: +91 (0) 33 - 2 23 18 57
E-mail: flender@flenderindia.com

PEOPLE'S REPUBLIC OF CHINA
Flender Power Transmission
(Tianjin) Co. Ltd.
ShuangHu Rd.- Shuangchen Rd. West
Beichen Economic Development
Area (BEDA)
Tianjin 300400
Phone: +86 (0) 22 - 26 97 20 63
Fax: +86 (0) 22 - 26 97 20 61
E-mail: flender@flendertj.com
www.flendertj.com

Flender Power Transmission
(Tianjin) Co. Ltd.
Beijing Office
C-415, Lufthansa Center
50 Liangmaqiao Road, Chaoyang District
Beijing 100016
Phone: +86 (0) 10 - 64 62 21 51
Fax: +86 (0) 10 - 64 62 21 43
E-mail: beijing@flenderprc.com.cn

Flender Power Transmission
(Tianjin) Co. Ltd.
Shanghai Office
1101-1102 Harbour Ring Plaza
18 Xizang Zhong Rd.
Shanghai 200 001
Phone: +86 (0) 21 - 53 85 31 48
Fax: +86 (0) 21 - 53 85 31 46
E-mail: shanghai@flenderprc.com.cn

Flender Power Transmission
(Tianjin) Co. Ltd.
Wuhan Office
Rm. 1503, Jianyin Building,
709 Jianshedadao
Wuhan 430 015
Phone: +86 (0) 27 - 85 48 67 15
Fax: +86 (0) 27 - 85 48 68 36
E-mail: wuhan@flenderprc.com.cn

Flender Power Transmission
(Tianjin) Co. Ltd.
Guangzhou Office
Rm. 2802, Guangzhou International
Electronics Tower
403 Huanshi Rd. East
Guangzhou 510 095
Phone: +86 (0) 20 - 87 32 60 42
Fax: +86 (0) 20 - 87 32 60 45
E-mail: guangzhou@flenderprc.com.cn

Flender Power Transmission
(Tianjin) Co. Ltd.
Chengdu Office
G-6 / F Guoxin Mansion,
77 Xiyu Street
Chengdu 610 015
Phone: +86 (0) 28 - 86 19 83 72
Fax: +86 (0) 28 - 86 19 88 10
E-mail: chengdu@flenderprc.com.cn

Flender Power Transmission
(Tianjin) Co. Ltd.
Shenyang Office
Rm. 2-163, Tower I, City Plaza Shenyan
206 Nanjing Street (N), Heping District
Shenyang 110 001
Phone: +86 (0) 24 - 23 34 20 48
Fax: +86 (0) 24 - 23 34 20 46
E-mail: shenyang@flenderprc.com.cn

Flender Power Transmission
(Tianjin) Co. Ltd.
Xi'an Office
Rm. 302, Shaanzi Zhong Da
International Mansion
30 Southern Rd.
Xi'an 710 002
Phone: +86 (0) 29 - 7 20 32 68
Fax: +86 (0) 29 - 7 20 32 04
E-mail: xian@flenderprc.com.cn

INDIA
Flender Limited
Head Office:
No. 2 St. George's Gate Road
5th Floor, Hastings
Kolkata - 700 022
Phone: +91 (0) 33 - 22 23 05 45
Fax: +91 (0) 33 - 22 23 08 30
E-mail: flender@flenderindia.com

Flender Limited
Industrial Growth Centre
Rakhajungle, Nimpura
Kharagpur - 721 302
Phone: +91 (0) 3222 - 23 33 07
Fax: +91 (0) 3222 - 23 33 64
E-mail: works@flenderindia.com

SALES OFFICES:
Flender Limited
Eastern Regional Sales Office
No. 2 St. George's Gate Road
5th Floor, Hastings
Kolkata - 700 022
Phone: +91 (0) 33 - 22 23 05 45
Fax: +91 (0) 33 - 22 23 08 30
E-mail: ero@flenderindia.com

Flender Limited
Western Regional Sales Office
Plot No. 23, Sector 19 - C
Vashi, Navi Mumbai - 400 705
Phone: +91 (0) 22 - 27 65 72 27
Fax: +91 (0) 22 - 27 65 72 28
E-mail: wro@flenderindia.com

Flender Limited
Southern Regional Sales Office
41 Nelson Manickam Road
Aminjikarai,
Chennai - 600 029
Phone: +91 (0) 44 - 23 74 39 21
Fax: +91 (0) 44 - 23 74 39 19
E-mail: sro@flenderindia.com

Flender Limited
Northern Regional Sales Office
209-A, Masjid Moth, 2nd Floor
(Behind South Extension II)
New Delhi - 110 049
Phone: +91 (0) 11 - 26 25 02 21
Fax: +91 (0) 11 - 26 25 63 72
E-mail: nro@flenderindia.com

INDONESIA
Flender Singapore Pte. Ltd.
Representative Office
Perkantoran Puri Niaga II
Jalan Puri Kencana Blok J1
No. 2i, Kembangan
Jakarta Barat 11610
Phone: +62 (0) 21 - 5 82 86 24
Fax: +62 (0) 21 - 5 82 86 23
E-mail: bobwall@cbn.net.id

IRAN
Cimaghand Co. Ltd.
P.O. Box 15745-493
No. 13, 16th East Street
Beyhaghi Ave., Argentina Sq.
Tehran 15156
Phone: +98 (0) 21 - 8 73 02 14
Fax: +98 (0) 21 - 8 73 39 70
E-mail: info@cimaghand.com

ISRAEL
Greenshpon Engineering Works Ltd.
Haamelim Street 20
P.O. Box 10108, 26110 Haifa
Phone: +972 (0) 4 - 8 72 11 87
Fax: +972 (0) 4 - 8 72 62 31
E-mail: sales@greenshpon.com
www.greenshpon.com

JAPAN
Flender Japan Co., Ltd.
WBG Marive East 21F
Nakasa 2 - 6
Mihama-ku, Chiba-shi
Chiba 261-7121
Phone: +81 (0) 43 - 2 13 39 30
Fax: +81 (0) 43 - 2 13 39 55
E-mail: contact@flender-japan.com

KOREA
Flender Ltd.
7th Fl. Dorim Bldg.
1823 Bangbae-Dong, Seocho-Ku,
Seoul 137-060
Phone: +82 (0) 2 - 34 78 63 37
Fax: +82 (0) 2 - 34 78 63 45
E-mail: flender@unitel.co.kr

KUWAIT
South Gulf Company
Al-Reqai, Plot 1, Block 96
P.O. Box 26229, Safat 13123
Phone: +965 (0) - 4 88 39 15
Fax: +965 (0) - 4 88 39 14
E-mail: adelameen@hotmail.com

LEBANON
Gabriel Acar & Fils s.a.r.l.
Dahr-el-Jamal
Zone Industrielle, Sin-el-Fil
B.P. 80484, Beyrouth
Phone: +961 (0) 1 - 49 82 72
Fax: +961 (0) 1 - 49 49 71
E-mail: gacar@beirut.com

MALAYSIA
Flender Singapore Pte. Ltd.
Representative Office
37 A - 2, Jalan PJU 1/39
Dataran Prima
47301 Petaling Jaya
Selangor Darul Ehsan
Phone: +60 (0) 3 - 78 80 42 63
Fax: +60 (0) 3 - 78 80 42 73
E-mail: flender@tm.net.my

PAKISTAN
Please refer to
A. Friedr. Flender AG
46393 Bocholt
Phone: +49 (0) 28 71 - 92 22 59
Fax: +49 (0) 28 71 - 92 15 16
E-mail: ludger.wittag@flender.com

PHILIPPINES
Flender Singapore Pte. Ltd.
Representative Office
28/F, Unit 2814
The Enterprise Centre
6766 Ayala Avenue corner
Paeso de Roxas, Makati City
Phone: +63 (0) 2 - 8 49 39 93
Fax: +63 (0) 2 - 8 49 39 17
E-mail: roman@flender.com.ph

BAHRAIN / IRAQ / JORDAN / LYBIA
OMAN / QATAR / U.A.E. / YEMEN
Please refer to A. Friedr. Flender AG
Middle East Sales Office
IMES Sanayi Sitesi
E Blok 502, Sokak No. 22
81260 Dudullu - Istanbul
Phone: +90 (0) 2 16 - 4 99 66 23
Fax: +90 (0) 2 16 - 3 64 59 13
E-mail: meso@flendertr.com

SAUDI ARABIA
South Gulf Co.
Al-Khobar, Dahran Str.
Middle East Trade Center
3rd floor, Flat # 23
P.O. Box 20434 31952 Al-Khobar
Phone: +966 (0) 3 - 8 87 53 32
Fax: +966 (0) 3 - 8 87 53 31
E-mail: adelameen@hotmail.com

SINGAPORE
Flender Singapore Pte. Ltd.
13 A, Tech Park Crescent
Singapore 637843
Phone: +65 (0) - 68 97 94 66
Fax: +65 (0) - 68 97 94 11
E-mail: flender@singnet.com.sg
www.flender.com.sg

SYRIA
Misrabi Co & Trading
Mezzeh Autostrade Transportation
Building 4/A, 5th Floor
P.O. Box 12450, Damascus
Phone: +963 (0) 11 - 6 11 67 94
Fax: +963 (0) 11 - 6 11 09 08
E-mail: ismael.misrabi@gmx.net

TAIWAN
A. Friedr. Flender AG
Taiwan Branch Company
1F, No. 5, Lane 240
Nan Yang Street, Hsichih
Taipei Hsien 221
Phone: +886 (0) 2 - 26 93 24 41
Fax: +886 (0) 2 - 26 94 36 11
E-mail: flender_tw@flender.com.tw

THAILAND
Flender Singapore Pte. Ltd.
Representative Office
23/F M Thai Tower, All Seasons Place
87 Wireless Road, Phatumwan
Bangkok 10330
Phone: +66 (0) 2 - 6 27 91 09
Fax: +66 (0) 2 - 6 27 90 01
E-mail: christian.beckers@flender.th.com

VIETNAM
Flender Singapore Pte. Ltd.
Representative Office
Suite 6/6A, 16F Saigon Tower
29 Le Duan Street, District 1
Ho Chi Minh City, Vietnam
Phone: +84 (0) 8 - 8 23 62 97
Fax: +84 (0) 8 - 8 23 62 88
E-mail: flender@hcm.vnn.vn

A U S T R A L I A

Flender (Australia) Pty. Ltd.
9 Nello Place, P.O. Box 6047
Wetherill Park
N.S.W. 2164, Sydney
Phone: +61 (0) 2 - 97 56 23 22
Fax: +61 (0) 2 - 97 56 48 92, 97 56 14 92
E-mail: sales@flender.com.au
www.flender.com.au

SALES OFFICES:
Flender (Australia) Pty. Ltd.
Suite 3, 261 Centre Rd.
Bentleigh, VIC 3204 Melbourne
Phone: +61 (0) 3 - 95 57 08 11
Fax: +61 (0) 3 - 95 57 08 22
E-mail: sales@flender.com.au

Flender (Australia) Pty. Ltd.
Suite 5, 1407 Logan Rd.
Mt. Gravatt
QLD 4122, Brisbane
Phone: +61 (0) 7 - 34 22 23 89
Fax: +61 (0) 7 - 34 22 24 03
E-mail: sales@flender.com.au

Flender (Australia) Pty. Ltd.
Suite 2 403 Great Eastern Highway
W.A. 6104, Redcliffe - Perth
Phone: +61 (0) 8 - 94 77 41 66
Fax: +61 (0) 8 - 94 77 65 11
E-mail: sales@flender.com.au

NEW ZEALAND
Please refer to Flender (Australia) Pty. Ltd.
9 Nello Place, P.O. Box 6047
Wetherill Park
N.S.W. 2164, Sydney
Phone: +61 (0) 2 - 97 56 23 22
Fax: +61 (0) 2 - 97 56 48 92
E-mail: sales@flender.com.au

12. Declaration by the manufacturer

Declaration by the manufacturer

in accordance with EC Engineering Guideline 98/37/EC, Appendix II B

We hereby declare that the

Crane gear units of types
K.SH, K.VH, K.HH, K.KH, K.DH, K.HM, K.KM, K.DM
Sizes 5 to 14

described in these Operating Instructions are intended for incorporation in a machine, and that it is prohibited to put them into service before verifying that the machine into which they are incorporated complies with the EC Guidelines (original edition 98/37/EC including any subsequent amendments thereto).

This Manufacturer's Declaration takes into account all the unified standards (inasmuch as they apply to our products) published by the European Commission in the Official Journal of the European Community.

Bocholt, 1998-10-05

Signature (person responible for products)

Operating Instructions

BA 7300 EN 01.05

Recommended Lubricants

ADDINOL	ANDEROL® Specialty Lubricants	ARAL	AVIA	BECHEM	BEL-RAY TOTAL PERFORMANCE LUBRICANTS
bp	Brugarolas	B&L	Castrol	CEPSA	cognis
DELTA OIL	Esso	FAG	FLENDER	FRAGOL	FUCHS
FUCHS LUBRITECH	galp energia	KLÜBER LUBRICATION	LE	MEGUIN OILS OF GERMANY	Mobil
MOTOREX	OMV	ORLEN OIL	Petrol Ofisi	Q8	Shell
SRS	STATOIL	TEXACO	TOTAL	SNAP	VECO
Verkol Lubricantes					

FLENDER

A. Friedr. Flender AG · 46393 Bocholt · Tel. 02871/92-0 · Telefax 02871/92-2596 · www.flender.com

Contents

1.	**Lubricants for gear units**	**3**
1.1	Required quality of gear oils	3
1.1.1	Oil groups	4
1.1.2	Oil temperatures	4
1.1.3	General oil service lives	4
1.1.4	Oil change	4
	Table A : Lubricating oils for FLENDER helical-gear, bevel helical-gear and planetary-gear units	5
	Table B : Lubricating oils for FLENDER worm-gear units	14
	Table C : Lubricating oils for FLENDER gear motors	18
1.2	Lubricating greases for gear units and rolling bearings	23
	Table D : Lubricating greases for FLENDER gear units and rolling bearings	23
2.	**Lubricants for ZAPEX couplings**	**25**
2.1	Required oil and grease quality	25
2.1.1	Oil and grease types	25
2.1.2	Oil and grease change	25
	Table E : Lubricating oils and lubricating greases for FLENDER ZAPEX couplings	26

1. Lubricants for gear units

Caution!

This lubricant recommendation does not apply to WINERGY AG gear units.

For **axle drives, marine gearboxes and turbo gear units** also special lubricant recommendations apply.

According to manufacturer's information the gear oils listed in these operating instructions are manufactured and supplied **world-wide** in the above-mentioned quality as required by FLENDER (Exceptions: Observe footnotes in the following tables).

1.1 Required quality of gear oils

For FLENDER gear units, only CLP-quality oils containing active agents to DIN 51 517-3 for increasing corrosion protection and resistance to ageing and for reducing wear in mixed-friction areas are approved. The scuffing resistance in the FZG test to DIN 51354-2 must comply with stage 12 or higher under A/8,3/90 test conditions. In the FE-8 rolling bearing test to DIN 51 819-3 rolling element wear must be under 30 mg and cage wear under 100 mg under test conditions D-7,5/80-80.

In addition, the gear oils must meet the following quality requirements demanded by FLENDER:

- Sufficiently high grey-staining resistance in accordance with FVA 54 grey-staining test
  a) for helical-gear, bevel-gear and planetary-gear units in table A, GS-criteria stage 10 or higher applies, and high grey-staining resistance GST = high
  b) for all other gear units in tables B and C, GS-criteria stage 9 or higher applies
- Low degree of foaming with less than 15 % foam formation in the FLENDER foam test
- Compatibility with elastomer materials of the radial shaft-sealing rings applied in FLENDER gear units
- Compatibility with residues of corrosion-protection agent and run-in oils used by FLENDER
- Compatibility with the paints used by FLENDER in its gear-unit interiors
- Compatibility with liquid seals between bolted-joint surfaces.

For use in worm-gear units moreover:

- Low wear, high pitting resistance and high efficiency (low temperature) in the cylindrical worm-gear unit test

Note: The use of gear oils which do not comply with the above quality requirements invalidate the FLENDER product guarantee obligation. Please note that every oil manufacturer or supplier is responsible for the quality of his product.

Always select the gear oil in accordance with the oil group and viscosity class indicated on the rating plate on the gear unit. If a different viscosity is selected, or oil of a type other than those recommended in these instructions, the operator assumes the responsibility for its technical suitability. In order to minimise the technical risk in such a case, the oil applied must be at least CLP oil quality to DIN 51 517-3, which should be confirmed by the oil manufacturer.

Caution!

The oil group and oil viscosity indicated on the rating plates as well as the instructions in the gear-unit operating instructions must be adhered to.

Deviations are permitted only after consultation with FLENDER!

1.1.1 Oil groups

In tables A, B and C five oil groups are distinguished:

- Mineral oils (MIN oil)
- Polyglycol (PG oil)
- Poly-α olefin (PAO oil)
- Biologically degradable oils (BIO oil)
- Physiologically safe oils approved in accordance with USDA H1 (PHY oil).

1.1.2 Oil temperatures

The synthetic oils have a wider temperature range and a higher viscosity index (i.e. a flatter viscosity-temperature gradient) than the mineral oils. Guideline values for temperature range:

mineral oils approx. –10 °C to +90 °C (short term +100 °C);
polyglycols and poly-α olefins approx. –20 °C to +100 °C (short term +110 °C);
bio-degradable oils (synthetic Ester) approx. –15 to +90 °C.

Note: The upper and lower operating temperatures of certain gear oils may deviate widely from the values indicated. For operating conditions outside the above mentioned temperature ranges, the flash point and pour point of the oils must be observed. For these and other data and properties of the gear oils, refer to the oil manufacturers' technical data sheets (to this purpose Flender must be consulted).

1.1.3 General oil service lives

According to the manufacturers, the following are the minimum periods during which the oils can be used without undergoing any significant change in quality. They are calculated on the basis of an average oil temperature of 80 °C:

– mineral oils, bio-degradable oils and physiologically safe oils: 2 years or 10 000 hours of service

– for poly-α olefins and polyglycols: 4 years or 20 000 hours of service.

Note: The actual service lives may be higher or lower (for temperatures over 80 °C). The general rule is that an increase in temperature of 10 K will halve the service life.

1.1.4 Oil change

The degree of purity of the oil affects the operating reliability and life span of the oil and the gear unit. It should therefore be ensured that the oil in the gear unit is clean. For the first oil change after start-up and for subsequent oil changes, the specifications in the gear-unit operating instructions must be observed. In the case of larger oil quantities, an analysis should be carried out before cleaning or changing the oil.

When changing oil of the same type, the quantity of oil remaining in the gear unit should be kept as low as possible. Generally speaking, a small remaining quantity will cause no particular problems. Gear oils of different types and manufacturers must not be mixed. If necessary, the manufacturer should confirm that the new oil is compatible with residues of the old oil. When changing to very different types of oil or oils with very different additives, especially when changing from polyglycols to another gear oil or vice versa, the gear unit must always be well flushed out with the new oil. Residues of old oil must be completely removed from the gear unit.

Caution! **Gear oils must never be mixed with other substances. Flushing with paraffin or other solvents is not permitted, as traces of these substances always remain inside the unit.**

Table A Lubricant	Code no.	Viscosity ISO-VG DIN 51519 at 40 °C (mm^2/s)	Lubricating oils for FLENDER helical-gear, bevel helical-gear and planetary-gear units			
			ADDINOL	ANDEROL® Specialty Lubricants	ARAL	AVIA
Mineral oils (MIN oil)	A11	VG 1000				
	A12	VG 680	CLP 680 S ECO GEAR 680 M		Degol BG 680 Plus Degol BMB 680 1)	GEAR RSX 680
	A13	VG 460	CLP 460 S ECO GEAR 460 M		Degol BG 460 Plus Degol BMB 460 1)	GEAR RSX 460
	A14	VG 320	CLP 320 S ECO GEAR 320 M		Degol BG 320 Plus Degol BMB 320 1)	GEAR RSX 320
	A15	VG 220	CLP 220 S ECO GEAR 220 M		Degol BG 220 Plus Degol BMB 220 1)	GEAR RSX 220
	A16	VG 150	CLP 150 S ECO GEAR 150 M		Degol BG 150 Plus Degol BMB 150 1)	GEAR RSX 150
	A17	VG 100	ECO GEAR 100 M		Degol BG 100 Plus Degol BMB 100 1)	GEAR RSX 100
Polyglycol (PG oil)	A21	VG 1000			Degol GS 1000	
	A22	VG 680			Degol GS 680	GEAR VSG 680
	A23	VG 460			Degol GS 460	GEAR VSG 460
	A24	VG 320			Degol GS 320	GEAR VSG 320
	A25	VG 220			Degol GS 220	GEAR VSG 220
	A26	VG 150			Degol GS 150	GEAR VSG 150
	A27	VG 100				GEAR VSG 100
Poly-α-olefin (PAO oil)	A31	VG 1000		4111 XEP 5999 XEP		SYNTOGEAR PE 1000
	A32	VG 680	ECO GEAR 680 S	4680 XEP 5680 XEP		SYNTOGEAR PE 680 EVOGEAR SX 680
	A33	VG 460	ECO GEAR 460 S	4460 XEP 5460 XEP	Degol PAS 460	SYNTOGEAR PE 460 EVOGEAR SX 460
	A34	VG 320	ECO GEAR 320 S	4320 XEP 5320 XEP	Degol PAS 320	SYNTOGEAR PE 320 EVOGEAR SX 320
	A35	VG 220	ECO GEAR 220 S	4220 XEP 5220 XEP	Degol PAS 220	SYNTOGEAR PE 220 EVOGEAR SX 220
	A36	VG 150	ECO GEAR 150 S	4150 XEP 5150 XEP	Degol PAS 150	SYNTOGEAR PE 150
	A37	VG 100	ECO GEAR 100 S	4100 XEP		SYNTOGEAR PE 100
Biologically degradable oils (BIO oil)	A41	VG 1000				
	A42	VG 680				
	A43	VG 460				
	A44	VG 320				
	A45	VG 220				
	A46	VG 150				
	A47	VG 100				
Physiologically safe oils (PHY oil)	A51	VG 1000				
	A52	VG 680				
	A53	VG 460				
	A54	VG 320				
	A55	VG 220				
	A56	VG 150				
	A57	VG 100				

1) with solid content MoS_2

Table A Lubricant	Code no.	Viscosity ISO-VG DIN 51519 at 40 °C (mm^2/s)	Lubricating oils for FLENDER helical-gear, bevel helical-gear and planetary-gear units			
			BECHEM	BEL-RAY TOTAL PERFORMANCE LUBRICANTS	bp	Brugarolas
Mineral oils (MIN oil)	A11	VG 1000				Beslux Gear XP 1000
	A12	VG 680			Energol GR-XF 680	Beslux Gear XP 680
	A13	VG 460			Energol GR-XF 460	Beslux Gear XP 460
	A14	VG 320			Energol GR-XF 320	Beslux Gear XP 320
	A15	VG 220			Energol GR-XF 220	Beslux Gear XP 220
	A16	VG 150			Energol GR-XF 150	
	A17	VG 100				
Polyglycol (PG oil)	A21	VG 1000				Beslux Sincart W 1000
	A22	VG 680	BERUSYNTH EP 680		Enersyn SG-XP 680	Beslux Sincart W 680
	A23	VG 460	BERUSYNTH EP 460		Enersyn SG-XP 460	Beslux Sincart W 460
	A24	VG 320	BERUSYNTH EP 320		Enersyn SG-XP 320	Beslux Sincart W 320
	A25	VG 220	BERUSYNTH EP 220		Enersyn SG-XP 220	Beslux Sincart W 220
	A26	VG 150	BERUSYNTH EP 150		Enersyn SG-XP 150	Beslux Sincart W 150
	A27	VG 100	BERUSYNTH EP 100		Enersyn SG-XP 100	
Poly-α-olefin (PAO oil)	A31	VG 1000		Bel-Ray Synth. Gear Oil 6698		Beslux Gearsint XP 1000
	A32	VG 680		Bel-Ray Synth. Gear Oil 6696		Beslux Gearsint XP 680
	A33	VG 460		Bel-Ray Synth. Gear Oil 6694	Enersyn EP-XF 460	Beslux Gearsint XP 460
	A34	VG 320		Bel-Ray Synth. Gear Oil 6692	Enersyn EP-XF 320	Beslux Gearsint XP 320
	A35	VG 220		Bel-Ray Synth. Gear Oil 6690	Enersyn EP-XF 220	Beslux Gearsint XP 220
	A36	VG 150		Bel-Ray Synth. Gear Oil 6688	Enersyn EP-XF 150	Beslux Gearsint XP 150
	A37	VG 100			Enersyn EP-XF 100	
Biologically degradable oils (BIO oil)	A41	VG 1000				
	A42	VG 680				
	A43	VG 460				
	A44	VG 320				
	A45	VG 220				
	A46	VG 150				
	A47	VG 100				
Physiologically safe oils (PHY oil)	A51	VG 1000				
	A52	VG 680				
	A53	VG 460				
	A54	VG 320				
	A55	VG 220				
	A56	VG 150				
	A57	VG 100				

Table A Lubricant	Code no.	Viscosity ISO-VG DIN 51519 at 40 °C (mm^2/s)	Lubricating oils for FLENDER helical-gear, bevel helical-gear and planetary-gear units			
			B&L	Castrol classic	Castrol performance	CEPSA
Mineral oils (MIN oil)	A11	VG 1000		Alpha SP 1000	Optigear BM 1000 Tribol 1100 / 1000	CEPSA AEROGEAR 1000
	A12	VG 680		Alpha SP 680	Optigear BM 680 Tribol 1100 / 680	CEPSA AEROGEAR 680
	A13	VG 460		Alpha SP 460 Alpha MAX 460	Optigear BM 460 Tribol 1100 / 460	CEPSA AEROGEAR 460
	A14	VG 320		Alpha SP 320 Alpha MAX 320	Optigear BM 320 Tribol 1100 / 320	CEPSA AEROGEAR 320
	A15	VG 220		Alpha SP 220 Alpha MAX 220	Optigear BM 220 Tribol 1100 / 220	CEPSA AEROGEAR 220
	A16	VG 150		Alpha SP 150 Alpha MAX 150	Optigear BM 150 Tribol 1100 / 150	
	A17	VG 100		Alpha SP 100 Alpha MAX 100	Optigear BM 100 Tribol 1100 / 100	
Polyglycol (PG oil)	A21	VG 1000			Tribol 800 / 1000	
	A22	VG 680			Tribol 800 / 680	
	A23	VG 460			Tribol 800 / 460	
	A24	VG 320			Tribol 800 / 320	
	A25	VG 220			Tribol 800 / 220	
	A26	VG 150			Tribol 800 / 150	
	A27	VG 100			Tribol 800 / 100	
Poly-α-olefin (PAO oil)	A31	VG 1000				
	A32	VG 680		Alphasyn EP 680		AEROGEAR SYNT 680
	A33	VG 460		Optigear Synth. A 460 Alphasyn EP 460	Optigear Synth. X 460 Tribol 1710 / 460	AEROGEAR SYNT 460
	A34	VG 320		Optigear Synth. A 320 Alphasyn EP 320	Optigear Synth. X 320 Tribol 1710 / 320	AEROGEAR SYNT 320
	A35	VG 220		Optigear Synth. A 220 Alphasyn EP 220	Optigear Synth. X 220 Tribol 1710 / 220	AEROGEAR SYNT 220
	A36	VG 150		Alphasyn EP 150		
	A37	VG 100				
Biologically degradable oils (BIO oil)	A41	VG 1000				
	A42	VG 680	RIVOLTA S.G.L. 680			
	A43	VG 460			Tribol BioTop 1418 / 460	
	A44	VG 320	RIVOLTA S.G.L. 320		Tribol BioTop 1418 / 320	
	A45	VG 220	RIVOLTA S.G.L. 220		Tribol BioTop 1418 / 220	
	A46	VG 150			Tribol BioTop 1418 / 150	
	A47	VG 100	RIVOLTA S.G.L. 100			
Physiologically safe oils (PHY oil)	A51	VG 1000				
	A52	VG 680			Optileb GT 680	
	A53	VG 460			Optileb GT 460	
	A54	VG 320			Optileb GT 320	
	A55	VG 220			Optileb GT 220	
	A56	VG 150			Optileb GT 150	
	A57	VG 100			Optileb GT 100	

Table A			Lubricating oils for FLENDER helical-gear, bevel helical-gear and planetary-gear units			
Lubricant	Code no.	**Viscosity** ISO-VG DIN 51519 at 40 °C (mm^2/s)	cognis	DELTA OIL	Esso	FUCHS
Mineral oils (MIN oil)	A11	VG 1000				RENOLIN CLP1000 PLUS
	A12	VG 680			SPARTAN EP 680 3)	RENOLIN CLP 680 / RENOLIN CLP 680 PLUS
	A13	VG 460		EP Industrial G 460	SPARTAN EP 460 3)	RENOLIN CLP 460 / RENOLIN CLP 460 PLUS
	A14	VG 320		EP Industrial G 320	SPARTAN EP 320 3)	RENOLIN CLP 320 / RENOLIN CLP 320 PLUS
	A15	VG 220		EP Industrial G 220	SPARTAN EP 220 3)	RENOLIN CLP 220 / RENOLIN CLP 220 PLUS
	A16	VG 150			SPARTAN EP 150 3)	RENOLIN CLP 150 / RENOLIN CLP 150 PLUS
	A17	VG 100			SPARTAN EP 100 3)	RENOLIN CLP 100 / RENOLIN CLP 100 PLUS
Polyglycol (PG oil)	A21	VG 1000	Breox SL 1000			RENOLIN PG 1000
	A22	VG 680	Breox SL 680			RENOLIN PG 680
	A23	VG 460	Breox SL 460			RENOLIN PG 460
	A24	VG 320	Breox SL 320			RENOLIN PG 320
	A25	VG 220	Breox SL 220			RENOLIN PG 220
	A26	VG 150	Breox SL 150			RENOLIN PG 150
	A27	VG 100				RENOLIN PG 100
Poly-α-olefin (PAO oil)	A31	VG 1000				
	A32	VG 680				RENOLIN UNISYN CLP 680
	A33	VG 460				RENOLIN UNISYN CLP 460
	A34	VG 320				RENOLIN UNISYN CLP 320
	A35	VG 220				RENOLIN UNISYN CLP 220
	A36	VG 150				RENOLIN UNISYN CLP 150
	A37	VG 100				RENOLIN UNISYN CLP 100
Biologically degradable oils (BIO oil)	A41	VG 1000				PLANTOGEAR 1000 S
	A42	VG 680				PLANTOGEAR 680 S
	A43	VG 460				PLANTOGEAR 460 S
	A44	VG 320				PLANTOGEAR 320 S
	A45	VG 220				PLANTOGEAR 220 S
	A46	VG 150				PLANTOGEAR 150 S
	A47	VG 100				PLANTOGEAR 100 S
Physiologically safe oils (PHY oil)	A51	VG 1000	Breox FGL 1000 2)			
	A52	VG 680	Breox FGL 680 2)			
	A53	VG 460	Breox FGL 460 2)			
	A54	VG 320	Breox FGL 320 2)			
	A55	VG 220	Breox FGL 220 2)			
	A56	VG 150	Breox FGL 150 2)			
	A57	VG 100				

2) PG oil
3) ESSO guarantees the qualities required by FLENDER only for products from Europe

Table A			Lubricating oils for FLENDER helical-gear, bevel helical-gear and planetary-gear units			
Lubricant	Code no.	**Viscosity** ISO-VG DIN 51519 at 40 °C (mm^2/s)	FUCHS LUBRITECH	FRAGOL	galp energia	KLÜBER LUBRICATION
Mineral oils (MIN oil)	A11	VG 1000	GEARMASTER CLP 1000			
	A12	VG 680	GEARMASTER CLP 680			Klüberoil GEM 1 - 680 N
	A13	VG 460	GEARMASTER CLP 460			Klüberoil GEM 1 - 460 N
	A14	VG 320	GEARMASTER CLP 320			Klüberoil GEM 1 - 320 N
	A15	VG 220	GEARMASTER CLP 220			Klüberoil GEM 1 - 220 N
	A16	VG 150	GEARMASTER CLP 150			Klüberoil GEM 1 - 150 N
	A17	VG 100	GEARMASTER CLP 100			Klüberoil GEM 1 - 100 N
Polyglycol (PG oil)	A21	VG 1000	GEARMASTER PGP 1000	Ucolub BSL-IG 1000		Klübersynth. GH 6 - 1000
	A22	VG 680	GEARMASTER PGP 680	Ucolub BSL-IG 680		Klübersynth. GH 6 - 680
	A23	VG 460	GEARMASTER PGP 460	Ucolub BSL-IG 460		Klübersynth. GH 6 - 460
	A24	VG 320	GEARMASTER PGP 320	Ucolub BSL-IG 320		Klübersynth. GH 6 - 320
	A25	VG 220	GEARMASTER PGP 220	Ucolub BSL-IG 220		Klübersynth. GH 6 - 220
	A26	VG 150	GEARMASTER PGP 150	Ucolub BSL-IG 150		Klübersynth. GH 6 - 150
	A27	VG 100	GEARMASTER PGP 100	Ucolub BSL-IG 100		
Poly-α-olefin (PAO oil)	A31	VG 1000	GEARMASTER SYN 1000			
	A32	VG 680	GEARMASTER SYN 680			Klübersynth. GEM 4 - 680 N
	A33	VG 460	GEARMASTER SYN 460	Ucolub N-PA 460	Galp Transgear SMP 460	Klübersynth. GEM 4 - 460 N
	A34	VG 320	GEARMASTER SYN 320	Ucolub N-PA 320	Galp Transgear SMP 320	Klübersynth. GEM 4 - 320 N
	A35	VG 220	GEARMASTER SYN 220	Ucolub N-PA 220	Galp Transgear SMP 220	Klübersynth. GEM 4 - 220 N
	A36	VG 150	GEARMASTER SYN 150		Galp Transgear SMP 150	Klübersynth. GEM 4 - 150 N
	A37	VG 100	GEARMASTER SYN 100			
Biologically degradable oils (BIO oil)	A41	VG 1000	GEARMASTER ECO 1000			
	A42	VG 680	GEARMASTER ECO 680			
	A43	VG 460	GEARMASTER ECO 460			
	A44	VG 320	GEARMASTER ECO 320			Klübersynth. GEM 2 - 320
	A45	VG 220	GEARMASTER ECO 220			Klübersynth. GEM 2 - 220
	A46	VG 150	GEARMASTER ECO 150			
	A47	VG 100	GEARMASTER ECO 100			
Physiologically safe oils (PHY oil)	A51	VG 1000		Ucolub BSL 1000 4)		
	A52	VG 680		Ucolub BSL 680 4)		
	A53	VG 460		Ucolub BSL 460 4)		
	A54	VG 320		Ucolub BSL 320 4)		
	A55	VG 220		Ucolub BSL 220 4)		
	A56	VG 150		Ucolub BSL 150 4)		
	A57	VG 100				

4) PG oil

Table A Lubricant	Code no.	Viscosity ISO-VG DIN 51519 at 40 °C (mm^2/s)	Lubricating oils for FLENDER helical-gear, bevel helical-gear and planetary-gear units			
				MEGUIN OILS OF GERMANY	Mobil	MOTOREX
Mineral oils (MIN oil)	A11	VG 1000				GEAR COMPOUND PLUS 1000
	A12	VG 680	609 ALMASOL Vari-Purpose Gear Lubricant		Mobilgear XMP 680	GEAR COMPOUND PLUS 680
	A13	VG 460	608 ALMASOL Vari-Purpose Gear Lubricant		Mobilgear XMP 460	GEAR COMPOUND PLUS 460
	A14	VG 320	605 ALMASOL Vari-Purpose Gear Lubricant		Mobilgear XMP 320	GEAR COMPOUND PLUS 320
	A15	VG 220	607 ALMASOL Vari-Purpose Gear Lubricant		Mobilgear XMP 220	GEAR COMPOUND PLUS 220
	A16	VG 150	604 ALMASOL Vari-Purpose Gear Lubricant		Mobilgear XMP 150	GEAR COMPOUND PLUS 150
	A17	VG 100	606 ALMASOL Vari-Purpose Gear Lubricant		Mobilgear XMP 100	GEAR COMPOUND PLUS 100
Polyglycol (PG oil)	A21	VG 1000				
	A22	VG 680				
	A23	VG 460				
	A24	VG 320				
	A25	VG 220				
	A26	VG 150				
	A27	VG 100				
Poly-α-olefin (PAO oil)	A31	VG 1000			Mobil SHC 639	GEAR SINTEC CLP 1000
	A32	VG 680		megol Gearoil Synth 680	Mobilgear SHC XMP680	GEAR SINTEC CLP 680
	A33	VG 460		megol Gearoil Synth 460	Mobil SHC 634 Mobilgear SHC XMP460	GEAR SINTEC CLP 460
	A34	VG 320		megol Gearoil Synth 320	Mobil SHC 632 Mobilgear SHC XMP320	GEAR SINTEC CLP 320
	A35	VG 220		megol Gearoil Synth 220	Mobil SHC 630 Mobilgear SHC XMP220	GEAR SINTEC CLP 220
	A36	VG 150			Mobil SHC 629 Mobilgear SHC XMP150	GEAR SINTEC CLP 150
	A37	VG 100				GEAR SINTEC CLP 100
Biologically degradable oils (BIO oil)	A41	VG 1000				
	A42	VG 680				
	A43	VG 460				
	A44	VG 320				
	A45	VG 220				
	A46	VG 150				
	A47	VG 100				
Physiologically safe oils (PHY oil)	A51	VG 1000				
	A52	VG 680				
	A53	VG 460				
	A54	VG 320				
	A55	VG 220				
	A56	VG 150				
	A57	VG 100				

Table A			Lubricating oils for FLENDER helical-gear, bevel helical-gear and planetary-gear units			
Lubricant	Code no.	**Viscosity** ISO-VG DIN 51519 at 40 °C (mm^2/s)	OMV	ORLEN OIL	Petrol Ofisi	Q8
Mineral oils (MIN oil)	A11	VG 1000	OMV gear HST 1000		PO Gravis MP 1000	
	A12	VG 680	OMV gear HST 680	TRANSOL PREMIUM 680	PO Gravis MP 680	
	A13	VG 460	OMV gear HST 460	TRANSOL PREMIUM 460	PO Gravis MP 460	
	A14	VG 320	OMV gear HST 320	TRANSOL PREMIUM 320	PO Gravis MP 320	Q8 Goya NT 320
	A15	VG 220	OMV gear HST 220	TRANSOL PREMIUM 220	PO Gravis MP 220	Q8 Goya NT 220
	A16	VG 150	OMV gear HST 150		PO Gravis MP 150	Q8 Goya NT 150
	A17	VG 100	OMV gear HST 100		PO Gravis MP 100	
Polyglycol (PG oil)	A21	VG 1000				
	A22	VG 680				
	A23	VG 460				
	A24	VG 320				
	A25	VG 220				
	A26	VG 150				
	A27	VG 100				
Poly-α-olefin (PAO oil)	A31	VG 1000		TRANSGEAR PE 1000	PO Gravis SP 1000	
	A32	VG 680		TRANSGEAR PE 680	PO Gravis SP 680	
	A33	VG 460		TRANSGEAR PE 460	PO Gravis SP 460	Q8 El Greco 460
	A34	VG 320		TRANSGEAR PE 320	PO Gravis SP 320	Q8 El Greco 320
	A35	VG 220		TRANSGEAR PE 220	PO Gravis SP 220	Q8 El Greco 220
	A36	VG 150				Q8 El Greco 150
	A37	VG 100				
Biologically degradable oils (BIO oil)	A41	VG 1000				
	A42	VG 680				
	A43	VG 460				
	A44	VG 320				
	A45	VG 220				
	A46	VG 150				
	A47	VG 100				
Physiologically safe oils (PHY oil)	A51	VG 1000				
	A52	VG 680				
	A53	VG 460				
	A54	VG 320				
	A55	VG 220				
	A56	VG 150				
	A57	VG 100				

Table A			Lubricating oils for FLENDER helical-gear, bevel helical-gear and planetary-gear units			
Lubricant	Code no.	**Viscosity** ISO-VG DIN 51519 at 40 °C (mm^2/s)	Shell	STATOIL	TEXACO	TOTAL
Mineral oils (MIN oil)	A11	VG 1000				KASSILLA GMP 1000 CARTER EP 1000
	A12	VG 680		LoadWay EP 680		KASSILLA GMP 680 CARTER EP 680
	A13	VG 460	Shell Omala F 460	LoadWay EP 460	Meropa WM 460 Auriga EP 460	KASSILLA GMP 460 CARTER EP 460
	A14	VG 320	Shell Omala F 320	LoadWay EP 320	Meropa WM 320 Auriga EP 320	KASSILLA GMP 320 CARTER EP 320
	A15	VG 220	Shell Omala F 220	LoadWay EP 220	Meropa WM 220 Auriga EP 220	KASSILLA GMP 220 CARTER EP 220
	A16	VG 150			Meropa WM 150 Auriga EP 150	
	A17	VG 100			Meropa WM 100 Auriga EP 100	
Polyglycol (PG oil)	A21	VG 1000	Shell Tivela S 1000 Shell Cassida WG 1000			
	A22	VG 680	Shell Tivela S 680 Shell Cassida WG 680			
	A23	VG 460	Shell Tivela S 460 Shell Cassida WG 460			
	A24	VG 320	Shell Tivela S 320 Shell Cassida WG 320			
	A25	VG 220	Shell Tivela S 220 Shell Cassida WG 220			
	A26	VG 150	Shell Tivela S 150 Shell Cassida WG 150			
	A27	VG 100				
Poly-α-olefin (PAO oil)	A31	VG 1000				CARTER SH 1000
	A32	VG 680	Shell Omala HD 680			CARTER SH 680
	A33	VG 460	Shell Omala HD 460			CARTER SH 460
	A34	VG 320	Shell Omala HD 320	MERETA 320		CARTER SH 320
	A35	VG 220	Shell Omala HD 220	MERETA 220		CARTER SH 220
	A36	VG 150	Shell Omala HD 150	MERETA 150		CARTER SH 150
	A37	VG 100				
Biologically degradable oils (BIO oil)	A41	VG 1000				
	A42	VG 680				
	A43	VG 460	Shell Omala EPB 460			
	A44	VG 320	Shell Omala EPB 320			
	A45	VG 220	Shell Omala EPB 220			
	A46	VG 150	Shell Omala EPB 150			
	A47	VG 100	Shell Omala EPB 100			
Physiologically safe oils (PHY oil)	A51	VG 1000	Shell Cassida WG 1000 5)			
	A52	VG 680	Shell Cassida WG 680 5)			
	A53	VG 460	Shell Cassida WG 460 5)			Keystone Nevastane SY 460 5)
	A54	VG 320	Shell Cassida WG 320 5)			Keystone Nevastane SY 320 5)
	A55	VG 220	Shell Cassida WG 220 5)			Keystone Nevastane SY 220 5)
	A56	VG 150				
	A57	VG 100				

5) PG oil

Table A			Lubricating oils for FLENDER helical-gear, bevel helical-gear and planetary-gear units			
Lubricant	Code no.	**Viscosity** ISO-VG DIN 51519 at 40 °C (mm^2/s)				
Mineral oils (MIN oil)	A11	VG 1000		VECO MATRANOL XP 1000		
	A12	VG 680	TUNGEAR 680 6)	VECO MATRANOL XP 680	COMPOUND MP 680	
	A13	VG 460	TUNGEAR 460 6)	VECO MATRANOL XP 460	COMPOUND MP 460	
	A14	VG 320	TUNGEAR 320 6)	VECO MATRANOL XP 320	COMPOUND MP 320	
	A15	VG 220	TUNGEAR 220 6)	VECO MATRANOL XP 220	COMPOUND MP 220	
	A16	VG 150			COMPOUND MP 150	
	A17	VG 100				
Polyglycol (PG oil)	A21	VG 1000				
	A22	VG 680				
	A23	VG 460				
	A24	VG 320				
	A25	VG 220				
	A26	VG 150				
	A27	VG 100				
Poly-α-olefin (PAO oil)	A31	VG 1000				
	A32	VG 680				
	A33	VG 460				
	A34	VG 320				
	A35	VG 220				
	A36	VG 150				
	A37	VG 100				
Biologically degradable oils (BIO oil)	A41	VG 1000				
	A42	VG 680				
	A43	VG 460				
	A44	VG 320				
	A45	VG 220				
	A46	VG 150				
	A47	VG 100				
Physiologically safe oils (PHY oil)	A51	VG 1000				
	A52	VG 680				
	A53	VG 460				
	A54	VG 320				
	A55	VG 220				
	A56	VG 150				
	A57	VG 100				

6) TUNGEAR is approved for Brazil under the name of GEAROIL in VG 220, 320, 460 and 680. Distributor: TRIBOTECHNICA Lubrificantes Sinteticos Sao Paulo.
TUNGEAR is approved for India under the name of Mox-Active Gear oil in VG 220, 320 and 460. Distributor: OKS Speciality Lubricants Bombay.

Table B Lubricant	Code no.	Viscosity ISO-VG DIN 51519 at 40 °C (mm^2/s)	Lubricating oils for FLENDER worm-gear units			
			ARAL	AVIA	BECHEM	bp
Mineral oils (MIN oil)	B11	VG 1000				Energol GR-XP 1000
	B12	VG 680	Degol BG 680			Energol GR-XP 680
	B13	VG 460	Degol BG 460			Energol GR-XP 460
	B14	VG 320	Degol BG 320			Energol GR-XP 320
	B15	VG 220	Degol BG 220			Energol GR-XP 220
	B16	VG 150	Degol BG 150			Energol GR-XP 150
	B17	VG 100	Degol BG 100			Energol GR-XP 100
Polyglycol (PG oil)	B21	VG 1000	Degol GS 1000			
	B22	VG 680	Degol GS 680	GEAR VSG 680	BERUSYNTH EP 680	Enersyn SG-XP 680
	B23	VG 460	Degol GS 460	GEAR VSG 460	BERUSYNTH EP 460	Enersyn SG-XP 460
	B24	VG 320	Degol GS 320	GEAR VSG 320	BERUSYNTH EP 320	Enersyn SG-XP 320
	B25	VG 220	Degol GS 220	GEAR VSG 220	BERUSYNTH EP 220	Enersyn SG-XP 220
	B26	VG 150	Degol GS 150	GEAR VSG 150	BERUSYNTH EP 150	Enersyn SG-XP 150
	B27	VG 100		GEAR VSG 100	BERUSYNTH EP 100	Enersyn SG-XP 100
Poly-α-olefin (PAO oil)	B31	VG 1000				
	B32	VG 680				
	B33	VG 460				
	B34	VG 320				
	B35	VG 220				
	B36	VG 150				
	B37	VG 100				
Biologically degradable oils (BIO oil)	B41	VG 1000				
	B42	VG 680				
	B43	VG 460				
	B44	VG 320				
	B45	VG 220				
	B46	VG 150				
	B47	VG 100				
Physiologically safe oils (PHY oil)	B51	VG 1000				
	B52	VG 680				
	B53	VG 460				
	B54	VG 320				
	B55	VG 220				
	B56	VG 150				
	B57	VG 100				

Table B			Lubricating oils for FLENDER worm-gear units			
Lubricant	Code no.	**Viscosity** ISO-VG DIN 51519 at 40 °C (mm^2/s)	Castrol performance	cognis	Esso	FUCHS
Mineral oils (MIN oil)	B11	VG 1000	Optigear BM 1000 / Tribol 1100 / 1000			
	B12	VG 680	Optigear BM 680 / Tribol 1100 / 680		SPARTAN EP 680 1)	
	B13	VG 460	Optigear BM 460 / Tribol 1100 / 460		SPARTAN EP 460 1)	
	B14	VG 320	Optigear BM 320 / Tribol 1100 / 320		SPARTAN EP 320 1)	
	B15	VG 220	Optigear BM 220 / Tribol 1100 / 220		SPARTAN EP 220 1)	
	B16	VG 150	Optigear BM 150 / Tribol 1100 / 150		SPARTAN EP 150 1)	
	B17	VG 100	Optigear BM 100 / Tribol 1100 / 100		SPARTAN EP 100 1)	
Polyglycol (PG oil)	B21	VG 1000	Optiflex A 1000 / Tribol 800 / 1000	Breox SL 1000		RENOLIN PG 1000
	B22	VG 680	Optiflex A 680 / Tribol 800 / 680	Breox SL 680		RENOLIN PG 680
	B23	VG 460	Optiflex A 460 / Tribol 800 / 460	Breox SL 460		RENOLIN PG 460
	B24	VG 320	Optiflex A 320 / Tribol 800 / 320	Breox SL 320		RENOLIN PG 320
	B25	VG 220	Optiflex A 220 / Tribol 800 / 220	Breox SL 220		RENOLIN PG 220
	B26	VG 150	Optiflex A 150 / Tribol 800 / 150	Breox SL 150		RENOLIN PG 150
	B27	VG 100	Optiflex A 100 / Tribol 800 / 100			RENOLIN PG 100
Poly-α-olefin (PAO oil)	B31	VG 1000				
	B32	VG 680				
	B33	VG 460				
	B34	VG 320				
	B35	VG 220				
	B36	VG 150				
	B37	VG 100				
Biologically degradable oils (BIO oil)	B41	VG 1000				
	B42	VG 680				
	B43	VG 460				
	B44	VG 320				
	B45	VG 220				
	B46	VG 150				
	B47	VG 100				
Physiologically safe oils (PHY oil)	B51	VG 1000		Breox FGL 1000 2)		
	B52	VG 680	Tribol FoodProof 1800 / 680 2)	Breox FGL 680 2)		
	B53	VG 460	Tribol FoodProof 1800 / 460 2)	Breox FGL 460 2)		
	B54	VG 320	Tribol FoodProof 1800 / 320 2)	Breox FGL 320 2)		
	B55	VG 220	Tribol FoodProof 1800 / 220 2)	Breox FGL 220 2)		
	B56	VG 150		Breox FGL 150 2)		
	B57	VG 100				

1) ESSO guarantees the qualities required by FLENDER only for products from Europe
2) PG oil

Table B			Lubricating oils for FLENDER worm-gear units			
Lubricant	Code no.	**Viscosity** ISO-VG DIN 51519 at 40 °C (mm^2/s)	FUCHS LUBRITECH	KLÜBER LUBRICATION	Mobil	Shell
Mineral oils (MIN oil)	B11	VG 1000				
	B12	VG 680		Klüberoil GEM 1 - 680 N	Mobilgear 636 / Mobilgear XMP 680	
	B13	VG 460		Klüberoil GEM 1 - 460 N	Mobilgear 634 / Mobilgear XMP 460	
	B14	VG 320		Klüberoil GEM 1 - 320 N	Mobilgear 632 / Mobilgear XMP 320	
	B15	VG 220		Klüberoil GEM 1 - 220 N	Mobilgear 630 / Mobilgear XMP 220	
	B16	VG 150		Klüberoil GEM 1 - 150 N	Mobilgear 629 / Mobilgear XMP 150	
	B17	VG 100		Klüberoil GEM 1 - 100 N	Mobilgear 627 / Mobilgear XMP 100	
Polyglycol (PG oil)	B21	VG 1000	GEARMASTER PGP 1000	SYNTHESO D 1000 EP		Shell Tivela S 1000 / Shell Cassida WG 1000
	B22	VG 680	GEARMASTER PGP 680	SYNTHESO D 680 EP		Shell Tivela S 680 / Shell Cassida WG 680
	B23	VG 460	GEARMASTER PGP 460	SYNTHESO D 460 EP		Shell Tivela S 460 / Shell Cassida WG 460
	B24	VG 320	GEARMASTER PGP 320	SYNTHESO D 320 EP		Shell Tivela S 320 / Shell Cassida WG 320
	B25	VG 220	GEARMASTER PGP 220	SYNTHESO D 220 EP		Shell Tivela S 220 / Shell Cassida WG 220
	B26	VG 150	GEARMASTER PGP 150	SYNTHESO D 150 EP		Shell Tivela S 150
	B27	VG 100	GEARMASTER PGP 100	SYNTHESO D 100 EP		
Poly-α-olefin (PAO oil)	B31	VG 1000				
	B32	VG 680				
	B33	VG 460				
	B34	VG 320				
	B35	VG 220				
	B36	VG 150				
	B37	VG 100				
Biologically degradable oils (BIO oil)	B41	VG 1000				
	B42	VG 680				
	B43	VG 460				
	B44	VG 320				
	B45	VG 220				
	B46	VG 150				
	B47	VG 100				
Physiologically safe oils (PHY oil)	B51	VG 1000				Shell Cassida WG 1000 3)
	B52	VG 680				Shell Cassida WG 680 3)
	B53	VG 460				Shell Cassida WG 460 3)
	B54	VG 320				Shell Cassida WG 320 3)
	B55	VG 220				Shell Cassida WG 220 3)
	B56	VG 150				
	B57	VG 100				

3) PG oil

Table B			Lubricating oils for FLENDER worm-gear units			
Lubricant	Code no.	**Viscosity** ISO-VG DIN 51519 at 40 °C (mm^2/s)	SRS			
Mineral oils (MIN oil)	B11	VG 1000				
	B12	VG 680	Ersolan 680			
	B13	VG 460	Ersolan 460			
	B14	VG 320	Ersolan 320			
	B15	VG 220	Ersolan 220			
	B16	VG 150	Ersolan 150			
	B17	VG 100	Ersolan 100			
Polyglycol (PG oil)	B21	VG 1000				
	B22	VG 680				
	B23	VG 460				
	B24	VG 320				
	B25	VG 220				
	B26	VG 150				
	B27	VG 100				
Poly-α-olefin (PAO oil)	B31	VG 1000				
	B32	VG 680				
	B33	VG 460				
	B34	VG 320				
	B35	VG 220				
	B36	VG 150				
	B37	VG 100				
Biologically degradable oils (BIO oil)	B41	VG 1000				
	B42	VG 680				
	B43	VG 460				
	B44	VG 320				
	B45	VG 220				
	B46	VG 150				
	B47	VG 100				
Physiologically safe oils (PHY oil)	B51	VG 1000				
	B52	VG 680				
	B53	VG 460				
	B54	VG 320				
	B55	VG 220				
	B56	VG 150				
	B57	VG 100				

Table C Lubricant	Code no.	Viscosity ISO-VG DIN 51519 at 40 °C (mm^2/s)	Lubricating oils for FLENDER gear motors			
			ADDINOL	ANDEROL® Specialty Lubricants	ARAL	AVIA
Mineral oils (MIN oil)	C15	VG 220	CLP 220 S ECO GEAR 220 M		Degol BG 220 Plus Degol BG 220 1)	GEAR RSX 220
	C16	VG 150	CLP 150 S ECO GEAR 150 M		Degol BG 150 Plus Degol BG 150 1)	GEAR RSX 150
	C17	VG 100	ECO GEAR 100 M		Degol BG 100 Plus Degol BG 100 1)	GEAR RSX 100
Polyglycol (PG oil)	C23	VG 460			Degol GS 460	GEAR VSG 460
	C24	VG 320			Degol GS 320	GEAR VSG 320
	C25	VG 220			Degol GS 220	GEAR VSG 220
Poly-α-olefin (PAO oil)	C33	VG 460	ECO GEAR 460 S	4460 XEP 5460 XEP	Degol PAS 460	SYNTOGEAR PE 460 EVOGEAR SX 460
	C34	VG 320	ECO GEAR 320 S	4320 XEP 5320 XEP	Degol PAS 320	SYNTOGEAR PE 320 EVOGEAR SX 320
	C35	VG 220	ECO GEAR 220 S	4220 XEP 5220 XEP	Degol PAS 220	SYNTOGEAR PE 220 EVOGEAR SX 220
Biologically degradable oils (BIO oil)	C44	VG 320				
	C45	VG 220				
	C46	VG 150				
Physiologically safe oils (PHY oil)	C53	VG 460				
	C54	VG 320				
	C55	VG 220				

1) with solid content MoS_2

Table C Lubricant	Code no.	Viscosity ISO-VG DIN 51519 at 40 °C (mm^2/s)	Lubricating oils for FLENDER gear motors			
			BECHEM	BEL-RAY TOTAL PERFORMANCE LUBRICANTS	bp	Brugarolas
Mineral oils (MIN oil)	C15	VG 220			Energol GR-XF 220 Energol GR-XP 220	Beslux Gear XP 220
	C16	VG 150			Energol GR-XF 150	
	C17	VG 100				
Polyglycol (PG oil)	C23	VG 460	BERUSYNTH EP 460		Enersyn SG-XP 460	Beslux Sincart W 460
	C24	VG 320	BERUSYNTH EP 320		Enersyn SG-XP 320	Beslux Sincart W 320
	C25	VG 220	BERUSYNTH EP 220		Enersyn SG-XP 220	Beslux Sincart W 220
Poly-α-olefin (PAO oil)	C33	VG 460		Bel-Ray Synth. Gear Oil 6694	Enersyn EP-XF 460	Beslux Gearsint XP 460
	C34	VG 320		Bel-Ray Synth. Gear Oil 6692	Enersyn EP-XF 320	Beslux Gearsint XP 320
	C35	VG 220		Bel-Ray Synth. Gear Oil 6690	Enersyn EP-XF 220	Beslux Gearsint XP 220
Biologically degradable oils (BIO oil)	C44	VG 320				
	C45	VG 220				
	C46	VG 150				
Physiologically safe oils (PHY oil)	C53	VG 460				
	C54	VG 320				
	C55	VG 220				

Table C Lubricant	Code no.	Viscosity ISO-VG DIN 51519 at 40 °C (mm^2/s)	Lubricating oils for FLENDER gear motors			
			B&L	Castrol classic	Castrol performance	CEPSA
Mineral oils (MIN oil)	C15	VG 220		Alpha SP 220 Alpha MAX 220	Optigear BM 220 Tribol 1100 / 220	CEPSA AEROGEAR 220
	C16	VG 150		Alpha SP 150 Alpha MAX 150	Optigear BM 150 Tribol 1100 / 150	
	C17	VG 100		Alpha SP 100 Alpha MAX 100	Optigear BM 100 Tribol 1100 / 100	
Polyglycol (PG oil)	C23	VG 460			Optiflex A 460 Tribol 800 / 460	
	C24	VG 320			Optiflex A 320 Tribol 800 / 320	
	C25	VG 220			Optiflex A 220 Tribol 800 / 220	
Poly-α-olefin (PAO oil)	C33	VG 460		Optigear Synth. A 460 Alphasyn EP 460	Optigear Synth. X 460 Tribol 1710 / 460	AEROGEAR SYNT 460
	C34	VG 320		Optigear Synth. A 320 Alphasyn EP 320	Optigear Synth. X 320 Tribol 1710 / 320	AEROGEAR SYNT 320
	C35	VG 220		Optigear Synth. A 220 Alphasyn EP 220	Optigear Synth. X 220 Tribol 1710 / 220	AEROGEAR SYNT 220
Biologically degradable oils (BIO oil)	C44	VG 320	RIVOLTA S.G.L. 320		Tribol BioTop 1418 / 320	
	C45	VG 220	RIVOLTA S.G.L. 220		Tribol BioTop 1418 / 220	
	C46	VG 150			Tribol BioTop 1418 / 150	
Physiologically safe oils (PHY oil)	C53	VG 460			Optileb GT 460 FoodProof 1800/460 2)	
	C54	VG 320			Optileb GT 320 FoodProof 1800/320 2)	
	C55	VG 220			Optileb GT 220 FoodProof 1800/220 2)	

2) PG oil

Table C Lubricant	Code no.	Viscosity ISO-VG DIN 51519 at 40 °C (mm^2/s)	Lubricating oils for FLENDER gear motors			
			cognis	DELTA OIL	Esso	FUCHS
Mineral oils (MIN oil)	C15	VG 220		EP Industrial G 220	SPARTAN EP 220 3)	RENOLIN CLP 220 RENOLIN CLP 220 PLUS
	C16	VG 150			SPARTAN EP 150 3)	RENOLIN CLP 150 RENOLIN CLP 150 PLUS
	C17	VG 100			SPARTAN EP 100 3)	RENOLIN CLP 100 RENOLIN CLP 100 PLUS
Polyglycol (PG oil)	C23	VG 460	Breox SL 460			RENOLIN PG 460
	C24	VG 320	Breox SL 320			RENOLIN PG 320
	C25	VG 220	Breox SL 220			RENOLIN PG 220
Poly-α-olefin (PAO oil)	C33	VG 460				RENOLIN UNISYN CLP 460
	C34	VG 320				RENOLIN UNISYN CLP 320
	C35	VG 220				RENOLIN UNISYN CLP 220
Biologically degradable oils (BIO oil)	C44	VG 320				PLANTOGEAR 320 S
	C45	VG 220				PLANTOGEAR 220 S
	C46	VG 150				PLANTOGEAR 150 S
Physiologically safe oils (PHY oil)	C53	VG 460	Breox FGL 460 4)			
	C54	VG 320	Breox FGL 320 4)			
	C55	VG 220	Breox FGL 220 4)			

3) ESSO guarantees the qualities required by FLENDER only for products from Europe
4) PG oil

Table C Lubricant	Code no.	Viscosity ISO-VG DIN 51519 at 40 °C (mm^2/s)	Lubricating oils for FLENDER gear motors			
			FUCHS LUBRITECH	FRAGOL	galp energia	KLÜBER LUBRICATION
Mineral oils (MIN oil)	C15	VG 220	GEARMASTER CLP 220			Klüberoil GEM 1 - 220 N
	C16	VG 150	GEARMASTER CLP 150			Klüberoil GEM 1 - 150 N
	C17	VG 100	GEARMASTER CLP 100			Klüberoil GEM 1 - 100 N
Polyglycol (PG oil)	C23	VG 460	GEARMASTER PGP 460	Ucolub BSL-IG 460		SYNTHESO D 460 EP
	C24	VG 320	GEARMASTER PGP 320	Ucolub BSL-IG 320		SYNTHESO D 320 EP
	C25	VG 220	GEARMASTER PGP 220	Ucolub BSL-IG 220		SYNTHESO D 220 EP
Poly-α-olefin (PAO oil)	C33	VG 460	GEARMASTER SYN 460	Ucolub N-PA 460	Galp Transgear SMP 460	Klübersynth. GEM 4 - 460 N
	C34	VG 320	GEARMASTER SYN 320	Ucolub N-PA 320	Galp Transgear SMP 320	Klübersynth. GEM 4 - 320 N
	C35	VG 220	GEARMASTER SYN 220	Ucolub N-PA 220	Galp Transgear SMP 220	Klübersynth. GEM 4 - 220 N
Biologically degradable oils (BIO oil)	C44	VG 320	GEARMASTER ECO 320			Klübersynth. GEM 2 - 320
	C45	VG 220	GEARMASTER ECO 220			Klübersynth. GEM 2 - 220
	C46	VG 150	GEARMASTER ECO 150			
Physiologically safe oils (PHY oil)	C53	VG 460		Ucolub BSL 460 5)		
	C54	VG 320		Ucolub BSL 320 5)		
	C55	VG 220		Ucolub BSL 220 5)		

5) PG oil

Table C Lubricant	Code no.	Viscosity ISO-VG DIN 51519 at 40 °C (mm^2/s)	Lubricating oils for FLENDER gear motors			
			LE	MEGUIN OILS OF GERMANY	Mobil	MOTOREX
Mineral oils (MIN oil)	C15	VG 220	607 ALMASOL Vari-Purpose Gear Lubricant		Mobilgear 630 Mobilgear XMP 220	GEAR COMPOUND PLUS 220
	C16	VG 150	604 ALMASOL Vari-Purpose Gear Lubricant		Mobilgear 629 Mobilgear XMP 150	GEAR COMPOUND PLUS 150
	C17	VG 100	606 ALMASOL Vari-Purpose Gear Lubricant		Mobilgear 627 Mobilgear XMP 100	GEAR COMPOUND PLUS 100
Polyglycol (PG oil)	C23	VG 460				
	C24	VG 320				
	C25	VG 220				
Poly-α-olefin (PAO oil)	C33	VG 460		megol Gearoil Synth 460	Mobil SHC 634 Mobilgear SHC XMP460	GEAR SINTEC CLP 460
	C34	VG 320		megol Gearoil Synth 320	Mobil SHC 632 Mobilgear SHC XMP320	GEAR SINTEC CLP 320
	C35	VG 220		megol Gearoil Synth 220	Mobil SHC 630 Mobilgear SHC XMP220	GEAR SINTEC CLP 220
Biologically degradable oils (BIO oil)	C44	VG 320				
	C45	VG 220				
	C46	VG 150				
Physiologically safe oils (PHY oil)	C53	VG 460				
	C54	VG 320				
	C55	VG 220				

Table C Lubricant	Code no.	Viscosity ISO-VG DIN 51519 at 40 °C (mm^2/s)	Lubricating oils for FLENDER gear motors			
			OMV	ORLEN OIL	Petrol Ofisi	Q8
Mineral oils (MIN oil)	C15	VG 220	OMV gear HST 220	TRANSOL PREMIUM 220	PO Gravis MP 220	Q8 Goya NT 220
	C16	VG 150	OMV gear HST 150		PO Gravis MP 150	Q8 Goya NT 150
	C17	VG 100	OMV gear HST 100		PO Gravis MP 100	
Polyglycol (PG oil)	C23	VG 460				
	C24	VG 320				
	C25	VG 220				
Poly-α-olefin (PAO oil)	C33	VG 460		TRANSGEAR PE 460	PO Gravis SP 460	Q8 El Greco 460
	C34	VG 320		TRANSGEAR PE 320	PO Gravis SP 320	Q8 El Greco 320
	C35	VG 220		TRANSGEAR PE 220	PO Gravis SP 220	Q8 El Greco 220
Biologically degradable oils (BIO oil)	C44	VG 320				
	C45	VG 220				
	C46	VG 150				
Physiologically safe oils (PHY oil)	C53	VG 460				
	C54	VG 320				
	C55	VG 220				

Table C Lubricant	Code no.	Viscosity ISO-VG DIN 51519 at 40 °C (mm^2/s)	Lubricating oils for FLENDER gear motors			
			Shell	SRS	STATOIL	TEXACO
Mineral oils (MIN oil)	C15	VG 220	Shell Omala F 220 Shell Omala 220	Ersolan 220	LoadWay EP 220	Meropa WM 220 Auriga EP 220
	C16	VG 150	Shell Omala F 150 Shell Omala 150	Ersolan 150		Meropa WM 150 Auriga EP 150
	C17	VG 100	Shell Omala F 100 Shell Omala 100	Ersolan 100		Meropa WM 100 Auriga EP 100
Polyglycol (PG oil)	C23	VG 460	Shell Tivela S 460 Shell Cassida WG 460			
	C24	VG 320	Shell Tivela S 320 Shell Cassida WG 320			
	C25	VG 220	Shell Tivela S 220 Shell Cassida WG 220			
Poly-α-olefin (PAO oil)	C33	VG 460	Shell Omala HD 460			
	C34	VG 320	Shell Omala HD 320		MERETA 320	
	C35	VG 220	Shell Omala HD 220		MERETA 220	
Biologically degradable oils (BIO oil)	C44	VG 320	Shell Omala EPB 320			
	C45	VG 220	Shell Omala EPB 220			
	C46	VG 150	Shell Omala EPB 150			
Physiologically safe oils (PHY oil)	C53	VG 460	Shell Cassida WG 460 6)			
	C54	VG 320	Shell Cassida WG 320 6)			
	C55	VG 220	Shell Cassida WG 220 6)			

6) PG oil

Table C Lubricant	Kenn-ziffer	Viscosity ISO-VG DIN 51519 at 40 °C (mm^2/s)	Lubricating oils for FLENDER gear motors			
			TOTAL	SHAP	VECO	Verkol Lubricantes
Mineral oils (MIN oil)	C15	VG 220	KASSILLA GMP 220 CARTER EP 220	TUNGEAR 220 7)	VECO MATRANOL XP 220	COMPOUND MP 220
	C16	VG 150				COMPOUND MP 150
	C17	VG 100				
Polyglycol (PG oil)	C23	VG 460				
	C24	VG 320				
	C25	VG 220				
Poly-α-olefin (PAO oil)	C33	VG 460	CARTER SH 460			
	C34	VG 320	CARTER SH 320			
	C35	VG 220	CARTER SH 220			
Biologically degradable oils (BIO oil)	C44	VG 320				
	C45	VG 220				
	C46	VG 150				
Physiologically safe oils (PHY oil)	C53	VG 460	Kestone Nevastane SY 460 8)			
	C54	VG 320	Kestone Nevastane SY 320 8)			
	C55	VG 220	Kestone Nevastane SY 220 8)			

7) TUNGEAR is approved for Brazil under the name of GEAROIL in VG 220. Distributor: TRIBOTECHNICA Lubrificantes Sinteticos Sao Paulo.
TUNGEAR is approved for India under the name of Mo_X-Active Gear oil in VG 220. Distributor: OKS Speciality Lubricants Bombay.
8) PG oil

1.2 Lubricating greases for gear units and rolling bearings

For special gear unit applications, grease lubrication of the gears and/or bearings may be necessary.

Note: Greases may be used only if their use is specified in the operating instructions for the gear unit. The relubrication periods must be adhered to.

Gear greases are suitable for the lubrication of gears and bearings with closed gear units (e.g. small gear units) and open drives with low peripheral speeds (e.g. for girth gears, racks).

As well as lubrication, rolling bearing greases are used for the special sealing of bearing points, e.g. with vertical gear-unit connection shafts or against environmental action such as dust or water spray.

Note: In closed gear units with internal oil lubrication the gear oils must not be allowed to mix with bearing greases.

Table D			**Lubricating greases for FLENDER gear units and rolling bearings**			
Lubricant	Code no.	**Consistency** NLGI class DIN 51818	ARAL	bp	Castrol classic	Castrol performance
Gear greases (MIN-GF) Mineral oil base	G13	3				Viscogen 1)
	G14	2				
	G15	1				
	G16	0				
	G17	00	Aralub FDP 00		CLS Grease	Tribol 5000 Optitemp OG 0
	G18	000				Longtime PD 00 MA Mehrzweckfett 00
Rolling bearing greases (MIN-WF) Mineral oil base Lithium saponification	H12	4				
	H13	3	Aralub HL3	Energrease LS 3	Spheerol AP 3	
	H14	2	Aralub HL2	Energrease LS 2	Spheerol AP 2 Spheerol EPL 2	Tribol 4020 / 220-2 Longtime PD 2
	H15	1				Tribol 3785 2)

1) with solid content MoS_2
2) Mixture of mineral oil and PAO

Table D			**Lubricating greases for FLENDER gear units and rolling bearings**			
Lubricant	Code no.	**Consistency** NLGI class DIN 51818	FAG	FUCHS	FUCHS LUBRITECH	KLÜBER LUBRICATION
Gear greases (MIN-GF) Mineral oil base	G13	3				
	G14	2				
	G15	1				
	G16	0				
	G17	00				MICROLUBE GB 00
	G18	000				
Rolling bearing greases (MIN-WF) Mineral oil base Lithium saponification	H12	4				
	H13	3		Renolit FWA 220 Renolit H 443-HD 88		
	H14	2	Arcanol L 186 V 3)	Renolit H 443-HD 88 Renolit FWA 160	LAGERMEISTER EP 2	CENTOPLEX GLP 402
	H15	1				

3) Li, Ca saponification

Table D	Code no.	Consistency NLGI class DIN 51818	Lubricating greases for FLENDER gear units and rolling bearings			
Lubricant			Mobil	Shell	SRS	TEXACO
Gear greases (MIN-GF) Mineral oil base	G13	3				Glissando FG 30 EP
	G14	2				
	G15	1				
	G16	0	Mobilux EP 004		Wiolub GFW	
	G17	00		Alvania GL 00		Marfak 00
	G18	000				
Rolling bearing greases (MIN-WF) Mineral oil base Lithium saponification	H12	4				
	H13	3	Mobilux EP 3	Alvania RL 3 Alvania EP / LF 3		
	H14	2	Mobilux EP 2	Alvania RL 2 Alvania EP / LF 2	Wiolub LFK 2	Multifak 2 Multifak 20
	H15	1				

Table D	Code no.	Consistency NLGI class DIN 51818	Lubricating greases for FLENDER gear units and rolling bearings			
Lubricant			TOTAL			
Gear greases (MIN-GF) Mineral oil base	G13	3				
	G14	2				
	G15	1				
	G16	0	Multis EP 0			
	G17	00	Multis EP 00			
	G18	000				
Rolling bearing greases (MIN-WF) Mineral oil base Lithium saponification	H12	4				
	H13	3	Multis 3 Multis EP 3			
	H14	2	Multis 2 Multis EP 2			
	H15	1	Multis 1 Multis EP 1			

2. Lubricants for ZAPEX couplings

Note: For **FLUDEX couplings**, special lubricant recommendations apply.

According to manufacturer's information the oils and greases listed in these operating instructions are manufactured and supplied **world-wide** in the above-mentioned quality as required by FLENDER (Exceptions: Observe footnotes in the tables).

2.1 Required oil and grease quality

For FLENDER ZAPEX couplings, only oils and greases containing active agents to DIN 51 517-3 for increasing corrosion protection and resistance to ageing and for reducing wear in mixed-friction areas are approved. The scuffing resistance of the oils in the FZG test to DIN 51 354-2 must comply with stage 12 or higher under A/8,3/90 test conditions.

In addition, the oils and greases must meet the following quality requirements specified by FLENDER:

- Compatibility with elastomer materials of the shaft-sealing rings
- Compatibility with liquid seals between bolted-joint surfaces.

Note: The use of lubricants which do not comply with the above quality requirements may invalidate our product guarantee. Please note that every lubricant manufacturer or supplier is responsible for the quality of his product.

Which lubricant to select always depends on the viscosity or NLGI class indicated in these operating instructions. If a different viscosity or NLGI class or a lubricant of a type other than those recommended in these instructions is used, the operator is responsible for its technical suitability. To minimise the technical risk in such cases, we recommend using a lubricant of the above indicated quality, which should be accompanied by a statement of suitability by the lubricant manufacturer.

Caution! **The instructions given in the operating instructions for the couplings must be observed!**

Deviations are permitted only after consultation with FLENDER!

2.1.1 Oil and grease types

Note: The upper and lower limits for the operating temperatures (flash point, pour point) of individual oils and greases may vary considerably. For these and other data and properties of oils and greases, refer to the lubricant manufacturers' technical data sheets.

According to the manufacturers, the following are the minimum periods during which the oils or greases can be used without undergoing any significant change in quality:

– with use at up to 70 °C after approx. 8 000 operating hours, max. 2 years,
  with use at over 70 °C after approx. 3 000 operating hours, max. 1 year.

2.1.2 Oil and grease change

The degree of purity of the lubricant affects the operating reliability and life span of the lubricant and the coupling. Care must always be taken that the oil or grease in the coupling is clean. For the first lubricant change after start-up of the coupling and for subsequent lubricant changes, the specifications in the operating instructions for the coupling must be observed. With larger lubricant quantities, an anlysis should be carried out to find out whether cleaning or changing is required.

When changing lubricant of the same type, the quantity of lubricant remaining in the coupling should be kept as low as possible. Generally speaking, a small remaining quantity will cause no particular problems. Lubricants of different types and manufacturers must not be mixed together. If necessary, confirmation that the new lubricant is compatible with residues of the old lubricant should be obtained from the manufacturer.

Caution! **Lubricants must never be mixed with other substances.**

Table E Lubricant	Code no.	Oil: Viscosity in cSt at 40 °C DIN 51519 Grease: Consistency DIN 51818		Lubricating oils and lubricating greases for FLENDER ZAPEX couplings			
				ADDINOL	ARAL	AVIA	bp
Mineral oils (MIN oil)	I11	ISO class	VG 1000				
	I12		VG 680	CLP 680 S ECO GEAR 680 M	Degol BG 680 Plus	GEAR RSX 680	Energol GR-XF 680
	I13		VG 460	CLP 460 S ECO GEAR 460 M	Degol BG 460 Plus	GEAR RSX 460	Energol GR-XF 460
	I14		VG 320				
Liquefied greases (MIN-FLF) Mineral oil base	J15	NLGI class	1				
	J16		0		Aralub Fließfett AN 0		
	J17		00				Energrease LS-EP 00
	J18		000				

Table E Lubricant	Code no.	Oil: Viscosity in cSt at 40 °C DIN 51519 Grease: Consistency DIN 51818		Lubricating oils and lubricating greases for FLENDER ZAPEX couplings			
				Brugarolas	Castrol classic	Castrol performance	CEPSA
Mineral oils (MIN oil)	I11	ISO class	VG 1000				CEPSA AEROGEAR 1000
	I12		VG 680	Beslux gear XP 680	Alpha SP 680	Tribol 1100 / 680 Optigear BM 680	CEPSA AEROGEAR 680
	I13		VG 460	Beslux gear XP 460	Alpha SP 460 Alpha MAX 460	Tribol 1100 / 460 Optigear BM 460	CEPSA AEROGEAR 460
	I14		VG 320				
Liquefied greases (MIN-FLF) Mineral oil base	J15	NLGI class	1				
	J16		0				
	J17		00		CLS Grease	Tribol 3020/1000-00 Longtime PD 00	
	J18		000				

Table E Lubricant	Code no.	Oil: Viscosity in cSt at 40 °C DIN 51519 Grease: Consistency DIN 51818		Lubricating oils and lubricating greases for FLENDER ZAPEX couplings			
				DELTA OIL	Esso	FLENDER	FUCHS
Mineral oils (MIN oil)	I11	ISO class	VG 1000				
	I12		VG 680		SPARTAN EP 680 1)		Renolin EPX 680 Renolin CLP 680 PLUS
	I13		VG 460	EP Industrial 460	SPARTAN EP 460 1)		Renolin EPX 460 Renolin CLP 460 PLUS
	I14		VG 320				
Liquefied greases (MIN-FLF) Mineral oil base	J15	NLGI class	1				
	J16		0			FLENDER Hochleistungsfett	
	J17		00				RENOLIT SO-D 6024
	J18		000				

1) ESSO guarantees the qualities required by FLENDER only for products from Europe

Table E Lubricant	Code no.	Oil: Viscosity in cSt at 40 °C DIN 51519 Grease: Consistency DIN 51818		Lubricating oils and lubricating greases for FLENDER ZAPEX couplings			
				FUCHS LUBRITECH	KLÜBER LUBRICATION	LE	Mobil
Mineral oils (MIN oil)	I11	ISO class	VG 1000				
	I12		VG 680	GEARMASTER CLP 680	STRUCTOVIS BHD-MF	609 ALMASOL Vari-Purpose Gear Lubricant	Mobilgear 636 Mobilgear XMP 680
	I13		VG 460	GEARMASTER CLP 460		608 ALMASOL Vari-Purpose Gear Lubricant	Mobilgear 634 Mobilgear XMP 460
	I14		VG 320				
Liquefied greases (MIN-FLF) Mineral oil base	J15	NLGI class	1				
	J16		0		GRAFLOSKON C-SG 500 Plus		
	J17		00				Mobilux EP 004
	J18		000				

Table E Lubricant	Code no.	Oil: Viscosity in cSt at 40 °C DIN 51519 Grease: Consistency DIN 51818		Lubricating oils and lubricating greases for FLENDER ZAPEX couplings			
				MOTOREX	OMV	PO Petrol Ofisi	Shell
Mineral oils (MIN oil)	I11	ISO class	VG 1000			PO Gravis MP 1000	
	I12		VG 680	GEAR COMPOUND PLUS 680	OMV gear HST 680	PO Gravis MP 680	Shell Omala 680
	I13		VG 460	GEAR COMPOUND PLUS 460	OMV gear HST 460	PO Gravis MP 460	Shell Omala 460 Shell Omala F 460
	I14		VG 320			PO Gravis MP 320	
Liquefied greases (MIN-FLF) Mineral oil base	J15	NLGI class	1				
	J16		0				
	J17		00				Alvina GL 00
	J18		000				

Table E Lubricant	Code no.	Oil: Viscosity in cSt at 40 °C DIN 51519 Grease: Consistency DIN 51818		Lubricating oils and lubricating greases for FLENDER ZAPEX couplings			
				STATOIL	TEXACO	SHAP	VECO
Mineral oils (MIN oil)	I11	ISO class	VG 1000				VECO MATRANOL XP 1000
	I12		VG 680			TUNGEAR 680 2)	VECO MATRANOL XP 680
	I13		VG 460		Meropa WM 460 Auriga EP 460	TUNGEAR 460 2)	VECO MATRANOL XP 460
	I14		VG 320	LoadWay EP 320			
Liquefied greases (MIN-FLF) Mineral oil base	J15	NLGI class	1				
	J16		0				
	J17		00				
	J18		000				

2) TUNGEAR is approved for Brazil under the name of GEAROIL in VG 460 and 680. Distributor: TRIBOTECHNICA Lubrificantes Sinteticos Sao Paulo.
TUNGEAR is approved for India under the name of Mox-Active Gear oil in VG 460. Distributor: OKS Speciality Lubricants Bombay.

Table E				Lubricating oils and lubricating greases for FLENDER ZAPEX couplings			
Lubricant	Code no.	**Oil: Viscosity** in cSt at 40 °C DIN 51519 **Grease: Consistency** DIN 51818		Verkol Lubricantes			
Mineral oils (MIN oil)	I11	**ISO class**	VG 1000				
	I12		VG 680				
	I13		VG 460				
	I14		VG 320	COMPOUND MP 320			
Liquefied greases (MIN-FLF) Mineral oil base	J15	**NLGI class**	1				
	J16		0				
	J17		00				
	J18		000				

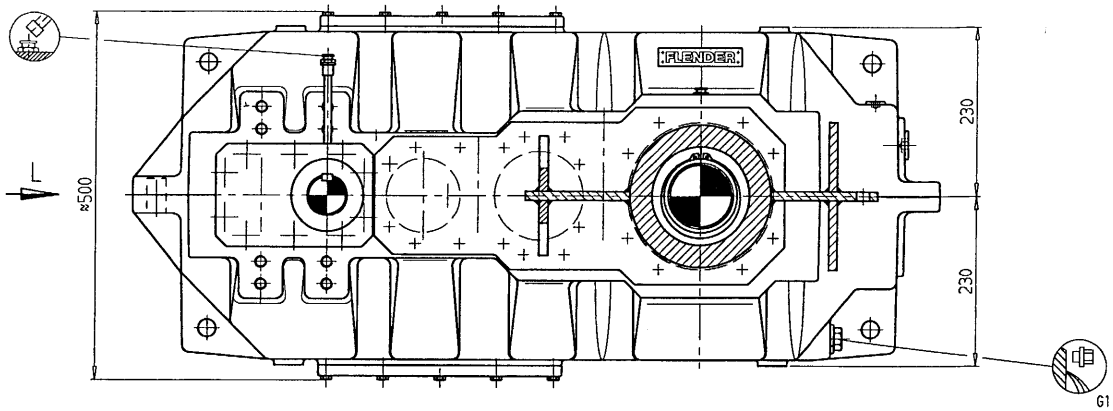

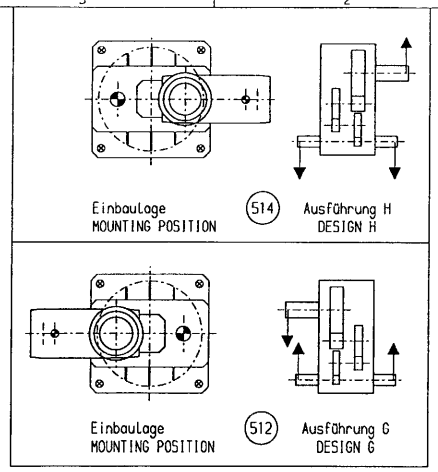

Umlaufende Teile müssen vom Käufer gegen unbeabsichtigtes Berühren gesichert werden!
(Gesetz über technische Arbeitsmittel)

The purchaser is responsible for the provision of safety guards.

Zylinderformtoleranz für Wellen und Bohrungen IT6 nach DIN ISO 286

Cylindricity tolerance for shafts and bores IT6 to DIN ISO 286

Wellenenden mit Nuten und Paßfedern nach DIN 6885/1 und Zentrierungen nach DIN 332, Form DS

Shaft ends with keyways and keys acc. to DIN 6885/1, and center. acc. to DIN 332, form DS.

Gleichartige Pfeile kennzeichnen die Abhängigkeit der Drehrichtungen!

Arrows show relative directions of rotation

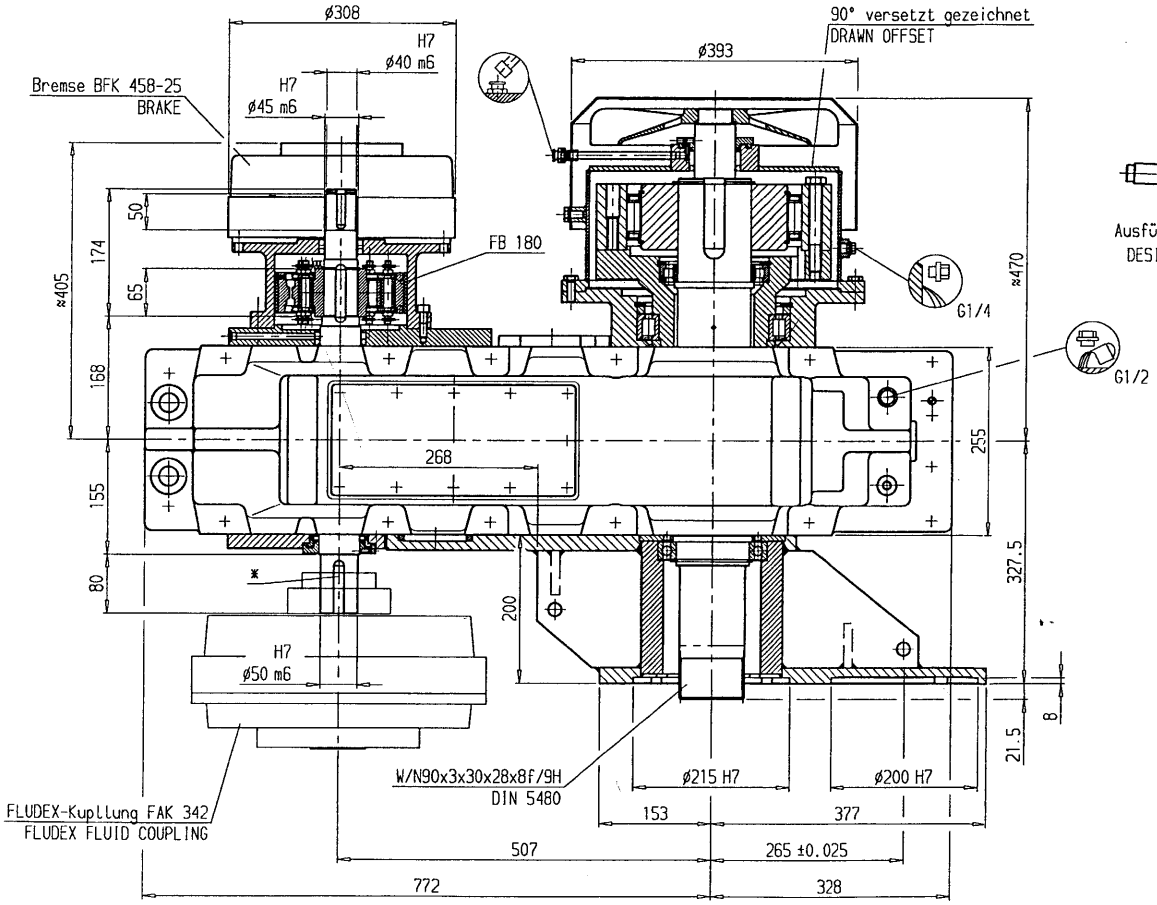

L
Einbaulage
MOUNTING POSITION
M 1:10

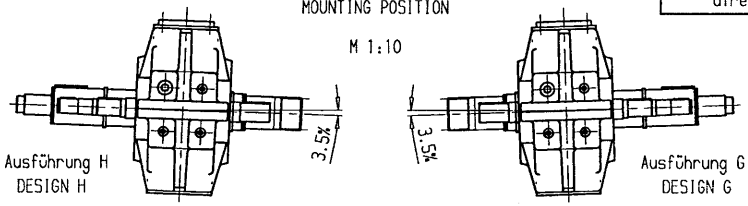

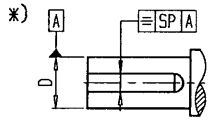

D		SP
8	≤22	0,035
>22	≤50	0,035
>50	≤85	0,055
>85	≤150	0,055
>150	≤230	0,07
>230	≤290	0,07
>290	≤500	0,1

Ausf. G	419 0519-220-1...1
Ausf. H	419 0519-200-1...1
Ausf. G	419 0294-220-1...1
Ausf. H	419 0294-200-1...1
Ausf. G	418 8481-220-1...1
Ausf. H	418 8481-200-1...1

SERIAL NO.	FABRIK-NR.	
TYPE	BAUART	K3UF
SIZE	GRÖßE	06
DESIGN	AUSFÜHRUNG	H / G
POWER RATING	LEISTUNG P	23.3 kW
INPUT SPEED	ANTRIEBSDREHZAHL n1	1470 1/min
OUTPUT SPEED	ABTRIEBSDREHZAHL n2	51.38 1/min
EXACT RATIO	ÜBERSETZUNG I ist	28.608
OIL QUANTITY	ÖLMENGE	≈ 22 L
OIL VISCOSITY	ÖL-VISKOSITÄT ISO VG 320	PAO-Oel synth.Oel

Auftr.-Nr. . 2005-08-02 gesichert

Tolerierung nach DIN ISO 8015

Allgemeintoleranzen ≤30 ±0,3 sonst nach DIN ISO 2768-mH

FLENDER

Werkstoff /-Nr. .

Benennung: MASSZCHNG K3UF 06 — Schl.-Nr.: 0290

an P2DA23/24 So-Adapter/D2 80mm Länger

Rohteil nach Zeichnung — sonst nach Zeichnung

Nicht gekennzeichnete Oberflächen: Rauhwerte Ra in µm

Gez.	ZGE	2005-07-27	Eichler
Gepr.	ZGE	2005-07-27	Eichler
Norm	.	.	.
	Abt.	Datum	Name

Maßstab 1:5 — Gewicht (kg) 650

Trägheitsmoment J (kgm²) .

Basis-Nr. | Äl | Ä

Modell-Nr. | Anz. | Teil

Format Art 7 | Zeichnungs-Nr. 6 095 227 | Äl

Ersatz für . | Aus Zchng. 6 093 735

Maße in mm

Schutzvermerk DIN 34 beachten

PLOTT-DATUM: 19-AUG-2005 12:44:39 H. Eichler, Martin/PZB

FLENDER	FLENDER – Zahnradgetriebe Gear unit Ersatzteilzeichnung/ Spare part drawing	Bauart / Type K3UF Größe / Size 5-8	Ausführung / Design H/G

Bei Korrespondenz bitte angeben / Please quote in correspondence | EZ .

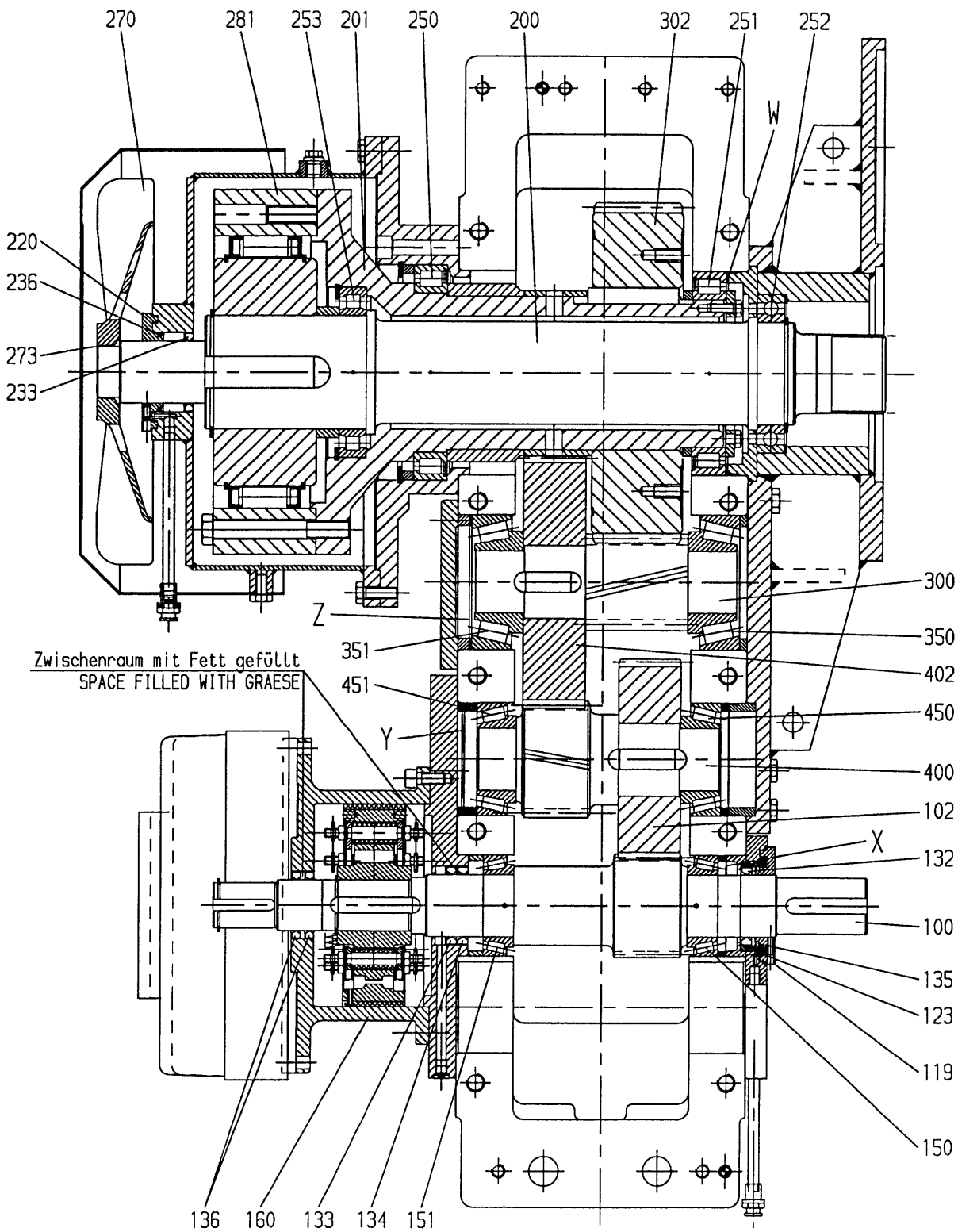

W,X,Y,Z = Paßscheibe / Shim

2005-08-02

FLENDER-Getriebwerk Penig GmbH, Thierbacher Str. 24, 09320 Penig, Tel. 037381/60, Telefax 0373816286	Datum / Date 2002-06-18	Name/Name Eichler	ZGE
		Y 6 008 616	a

Diese technische Unterlage hat gesetzlichen Schutz (DIN 34)

FLENDER	Ersatzteilliste (EL) Spare parts list	Bauart K3UF Type Größe 6,0 Size Übersetzung 28,608 ratio	Seite Page 1/2

Bei Korrespondenz bitte angeben
Please quote in correspondence **EL 4190294-200 DE/EN**

Hierzu gehört Zeichnungs-Nr.
Please refer to DWG No. **6008616**

	Teil-Nr. Part No.	Menge No. off		Benennung Description	Zeichnungs-Nr. Drawings No.	Material-Nr. Ident no.	Gw(kg) Weight
E	0100	1	ST	STRDWELLE D79,03X577 1.6587 PINION SHAFT D79,03X577 1.6587	6046354/A	000.001.260.094	10,8
E	0102	1	ST	STIRNRAD R 130,0/2,54 1.6587 GEAR WHEEL R 130,0/2,54 1.6587	5880842/B	000.000.560.842	10,2
E	0119	1	ST	RINGTRAEGER D98/55X17 C45 Ring carrier	8761311/A	026.787.613.118	0,5
E	0123	2	ST	O-RING OR0074 -03 W 5713 72NBR872 O-RING OR0074 -03 W 5713 72NBR872		000.000.243.323	0,0
E	0132	1	ST	WDR 055X070X08 BAUMSL W 5710 75FPM585 SHAFT SEAL 055X070X08 BAUMSL W 5710		000.000.306.052	0,0
E	0133	1	ST	WDR 055X070X08 BAUMSL W 5710 75FPM585 SHAFT SEAL 055X070X08 BAUMSL W 5710		000.000.306.052	0,0
E	0134	1	ST	WDR 55X70X10 BAUM W5710 75FKM585 SHAFT SEAL 55X70X10 BAUM W5710 75FKM585		002.900.076.606	0,0
E	0135	3	ST	RING,AS 070/03,1X0,82 W 5730 FED-ST LAMELLAR RING, AS (FEY) 070/03,1X0,82 W		000.000.347.199	0,1
E	0136	2	ST	WDR 42X62X8 BAUM 75FPM585 SHAFT SEAL 42X62X8 BAUM 75FPM585		000.050.027.652	0,1
E	0150	1	ST	WAELZL 33011 D 720 ST-KAEF ROLLING CONTACT BEARING 33011 D 720		000.000.777.665	0,7
E	0151	1	ST	WAELZL 33011 D 720 ST-KAEF ROLLING CONTACT BEARING 33011 D 720		000.000.777.665	0,7
E	0160	1	ST	TROMMEL-BREMS K3UF5/6 - FB180 C45N80 Brake drum	8762258/-	027.987.622.588	12,6
E	0200	1	ST	WELLE D109X803 34CRNIMO6 K3/K4 06 SHAFT D109X803 34CRNIMO6 K3/K4 06		000.001.255.247	41,8
E	0201	1	ST	WELLE-FLANSCH 322X0372 C60+N FLANGED SHAFT 322X0372 C60+N	8895938/A	000.000.695.938	35,1
E	0220	1	ST	RINGTRAEGER055X104,0X19 C45 RING CARRIER055X104,0X19 C45	5877840/-	000.000.677.840	0,6
E	0233	1	ST	WDR 055X070X08 BAUMSL W 5710 75FPM585 SHAFT SEAL 055X070X08 BAUMSL W 5710		000.000.306.052	0,0
E	0236	3	ST	RING,AS 070/03,1X0,82 W 5730 FED-ST LAMELLAR RING, AS (FEY) 070/03,1X0,82 W		000.000.347.199	0,1
E	0250	1	ST	WAELZL182928 SL ROLLING CONTACT BEARING182928 SL		000.000.379.145	2,6
E	0251	1	ST	WAELZL 182930 SL ROLLING CONTACT BEARING 182930 SL		000.050.003.926	3,8
E	0252	1	ST	WAELZL 6020 D 625 MET-KAEF ROLLING CONTACT BEARING 6020 D 625		000.000.380.620	1,4
E	0253	1	ST	WAELZL 1020 NU MA/C3 D 5412 MS-KAEF ROLLING CONTACT BEARING 1020 NU MA/C3 D		000.000.380.428	2,0
E	0270	1	ST	LUEFTER 340/ 45 AC45000 FAN 340/ 45 AC45000	5882387/E	000.000.562.387	1,5
E	0273	1	ST	RING-TOL BN0820-045-02 W 3372 FED-ST DISTANCE RING BN0820-045-02 W 3372		000.000.346.005	0,0

Die mit * gekennzeichneten Teile gehören zu einer Baugruppe (G). Die Baugruppe ist nur komplett auszutauschen.
The parts marked with * belong to a subassembly (G). The subassemblymust be replaced complete.

A. Friedr.Flender AG, D 46393 Bocholt,
Tel. +49(0)2871/92-0, Fax +49(0)2871/922596, http://www.flender.com

Datum Date	EICHLER, MARTIN PE-387
19.08.2005	Rev.:

FLENDER	Ersatzteilliste (EL) Spare parts list	Bauart K3UF Type Größe 6,0 Size Übersetzung 28,608 ratio	Seite Page 2/2

Bei Korrespondenz bitte angeben
Please quote in correspondence **EL 4190294-200 DE/EN**

Hierzu gehört Zeichnungs-Nr.
Please refer to DWG No. **6008616**

	Teil-Nr. Part No.	Menge No. off		Benennung Description	Zeichnungs-Nr. Drawings No.	Material-Nr. Ident no.	Gw(kg) Weight
E	0281	1	ST	RS FXM 200- 63SX/H100 W 5813 ST BACKSTOP FXM 200- 63SX/H100 W 5813 ST		000.000.389.016	52,0
E	0300	1	ST	STRDWELLE R 185,0/3,94 1.6587 PINION SHAFT R 185,0/3,94 1.6587	5875775/A	000.000.675.775	6,3
E	0302	1	ST	STIRNRAD L 220,0/4,89 1.6587 GEAR WHEEL L 220,0/4,89 1.6587	5875752/B	000.000.675.752	54,4
E	0350	1	ST	WAELZL 32311 B D 720 ST-KAEF ROLLING CONTACT BEARING 32311 B D 720		000.000.380.564	2,5
E	0351	1	ST	WAELZL 32311 B D 720 ST-KAEF ROLLING CONTACT BEARING 32311 B D 720		000.000.380.564	2,5
E	0400	1	ST	STRDWELLE L 157,0/2,31 1.6587 PINION SHAFT L 157,0/2,31 1.6587	5886512/-	000.000.666.512	7,5
E	0402	1	ST	STIRNRAD R 157,0/2,31 1.6587 GEAR WHEEL R 157,0/2,31 1.6587	5886513/-	000.000.666.513	14,5
E	0450	1	ST	WAELZL 33211 D 720 ST-KAEF ROLLING CONTACT BEARING 33211 D 720		000.000.379.174	1,2
E	0451	1	ST	WAELZL 33211 D 720 ST-KAEF ROLLING CONTACT BEARING 33211 D 720		000.000.379.174	1,2

A. Friedr.Flender AG, D 46393 Bocholt,
Tel. +49(0)2871/92-0, Fax +49(0)2871/922596, http://www.flender.com

Datum Date	EICHLER, MARTIN PE-387
19.08.2005	Rev.:

FLENDER	Ersatzteilliste (EL) Spare parts list	Bauart K3UF Type Größe 6,0 Size Übersetzung 28,608 ratio	Seite Page 1/2

Bei Korrespondenz bitte angeben
Please quote in correspondence **EL 4190294-220 DE/EN**

Hierzu gehört Zeichnungs-Nr.
Please refer to DWG No. **6008616**

	Teil-Nr. Part No.	Menge No. off		Benennung Description	Zeichnungs-Nr. Drawings No.	Material-Nr. Ident no.	Gw(kg) Weight
E	0100	1	ST	STRDWELLE D79,03X577 1.6587 PINION SHAFT D79,03X577 1.6587	6046354/A	000.001.260.094	10,8
E	0102	1	ST	STIRNRAD R 130,0/2,54 1.6587 GEAR WHEEL R 130,0/2,54 1.6587	5880842/B	000.000.560.842	10,2
E	0119	1	ST	RINGTRAEGER D98/55X17 C45 Ring carrier	8761311/A	026.787.613.118	0,5
E	0123	2	ST	O-RING OR0074 -03 W 5713 72NBR872 O-RING OR0074 -03 W 5713 72NBR872		000.000.243.323	0,0
E	0132	1	ST	WDR 055X070X08 BAUMSL W 5710 75FPM585 SHAFT SEAL 055X070X08 BAUMSL W 5710		000.000.306.052	0,0
E	0133	1	ST	WDR 055X070X08 BAUMSL W 5710 75FPM585 SHAFT SEAL 055X070X08 BAUMSL W 5710		000.000.306.052	0,0
E	0134	1	ST	WDR 55X70X10 BAUM W5710 75FKM585 SHAFT SEAL 55X70X10 BAUM W5710 75FKM585		002.900.076.606	0,0
E	0135	3	ST	RING,AS 070/03,1X0,82 W 5730 FED-ST LAMELLAR RING, AS (FEY) 070/03,1X0,82 W		000.000.347.199	0,1
E	0136	2	ST	WDR 42X62X8 BAUM 75FPM585 SHAFT SEAL 42X62X8 BAUM 75FPM585		000.050.027.652	0,1
E	0150	1	ST	WAELZL 33011 D 720 ST-KAEF ROLLING CONTACT BEARING 33011 D 720		000.000.777.665	0,7
E	0151	1	ST	WAELZL 33011 D 720 ST-KAEF ROLLING CONTACT BEARING 33011 D 720		000.000.777.665	0,7
E	0160	1	ST	TROMMEL-BREMS K3UF5/6 - FB180 C45N80 Brake drum	8762258/-	027.987.622.588	12,6
E	0200	1	ST	WELLE D109X803 34CRNIMO6 K3/K4 06 SHAFT D109X803 34CRNIMO6 K3/K4 06		000.001.255.247	41,8
E	0201	1	ST	WELLE-FLANSCH 322X0372 C60+N FLANGED SHAFT 322X0372 C60+N	8895938/A	000.000.695.938	35,1
E	0220	1	ST	RINGTRAEGER055X104,0X19 C45 RING CARRIER055X104,0X19 C45	5877840/-	000.000.677.840	0,6
E	0233	1	ST	WDR 055X070X08 BAUMSL W 5710 75FPM585 SHAFT SEAL 055X070X08 BAUMSL W 5710		000.000.306.052	0,0
E	0236	3	ST	RING,AS 070/03,1X0,82 W 5730 FED-ST LAMELLAR RING, AS (FEY) 070/03,1X0,82 W		000.000.347.199	0,1
E	0250	1	ST	WAELZL182928 SL ROLLING CONTACT BEARING182928 SL		000.000.379.145	2,6
E	0251	1	ST	WAELZL 182930 SL ROLLING CONTACT BEARING 182930 SL		000.050.003.926	3,8
E	0252	1	ST	WAELZL 6020 D 625 MET-KAEF ROLLING CONTACT BEARING 6020 D 625		000.000.380.620	1,4
E	0253	1	ST	WAELZL 1020 NU MA/C3 D 5412 MS-KAEF ROLLING CONTACT BEARING 1020 NU MA/C3 D		000.000.380.428	2,0
E	0270	1	ST	LUEFTER 340/ 45 AC45000 FAN 340/ 45 AC45000	5882387/E	000.000.562.387	1,5
E	0273	1	ST	RING-TOL BN0820-045-02 W 3372 FED-ST DISTANCE RING BN0820-045-02 W 3372		000.000.346.005	0,0

Die mit * gekennzeichneten Teile gehören zu einer Baugruppe (G). Die Baugruppe ist nur komplett auszutauschen.
The parts marked with * belong to a subassembly (G). The subassemblymust be replaced complete.

FLENDER	Ersatzteilliste (EL) Spare parts list	Bauart K3UF Type Größe 6,0 Size Übersetzung 28,608 ratio	Seite Page 2/2

Bei Korrespondenz bitte angeben
Please quote in correspondence **EL 4190294-220 DE/EN**

Hierzu gehört Zeichnungs-Nr.
Please refer to DWG No. **6008616**

	Teil-Nr. Part No.	Menge No. off		Benennung Description	Zeichnungs-Nr. Drawings No.	Material-Nr. Ident no.	Gw(kg) Weight
E	0281	1	ST	RS FXM 200- 63SX/H100 W 5813 ST BACKSTOP FXM 200- 63SX/H100 W 5813 ST		000.000.389.016	52,0
E	0300	1	ST	STRDWELLE R 185,0/3,94 1.6587 PINION SHAFT R 185,0/3,94 1.6587	5875775/A	000.000.675.775	6,3
E	0302	1	ST	STIRNRAD L 220,0/4,89 1.6587 GEAR WHEEL L 220,0/4,89 1.6587	5875752/B	000.000.675.752	54,4
E	0350	1	ST	WAELZL 32311 B D 720 ST-KAEF ROLLING CONTACT BEARING 32311 B D 720		000.000.380.564	2,5
E	0351	1	ST	WAELZL 32311 B D 720 ST-KAEF ROLLING CONTACT BEARING 32311 B D 720		000.000.380.564	2,5
E	0400	1	ST	STRDWELLE L 157,0/2,31 1.6587 PINION SHAFT L 157,0/2,31 1.6587	5886512/-	000.000.666.512	7,5
E	0402	1	ST	STIRNRAD R 157,0/2,31 1.6587 GEAR WHEEL R 157,0/2,31 1.6587	5886513/-	000.000.666.513	14,5
E	0450	1	ST	WAELZL 33211 D 720 ST-KAEF ROLLING CONTACT BEARING 33211 D 720		000.000.379.174	1,2
E	0451	1	ST	WAELZL 33211 D 720 ST-KAEF ROLLING CONTACT BEARING 33211 D 720		000.000.379.174	1,2

A. Friedr.Flender AG, D 46393 Bocholt,
Tel. +49(0)2871/92-0, Fax +49(0)2871/922596, http://www.flender.com

Datum Date	EICHLER, MARTIN PE-387
19.08.2005	Rev.:

Operating Instructions

BA 4600 EN 09.04

FLUDEX Couplings Type
FAO, FAD, FAE, FAM, FADB, FADS, FAK, FAKB and **FAR**
including configuration in accordance with 94/9/EC

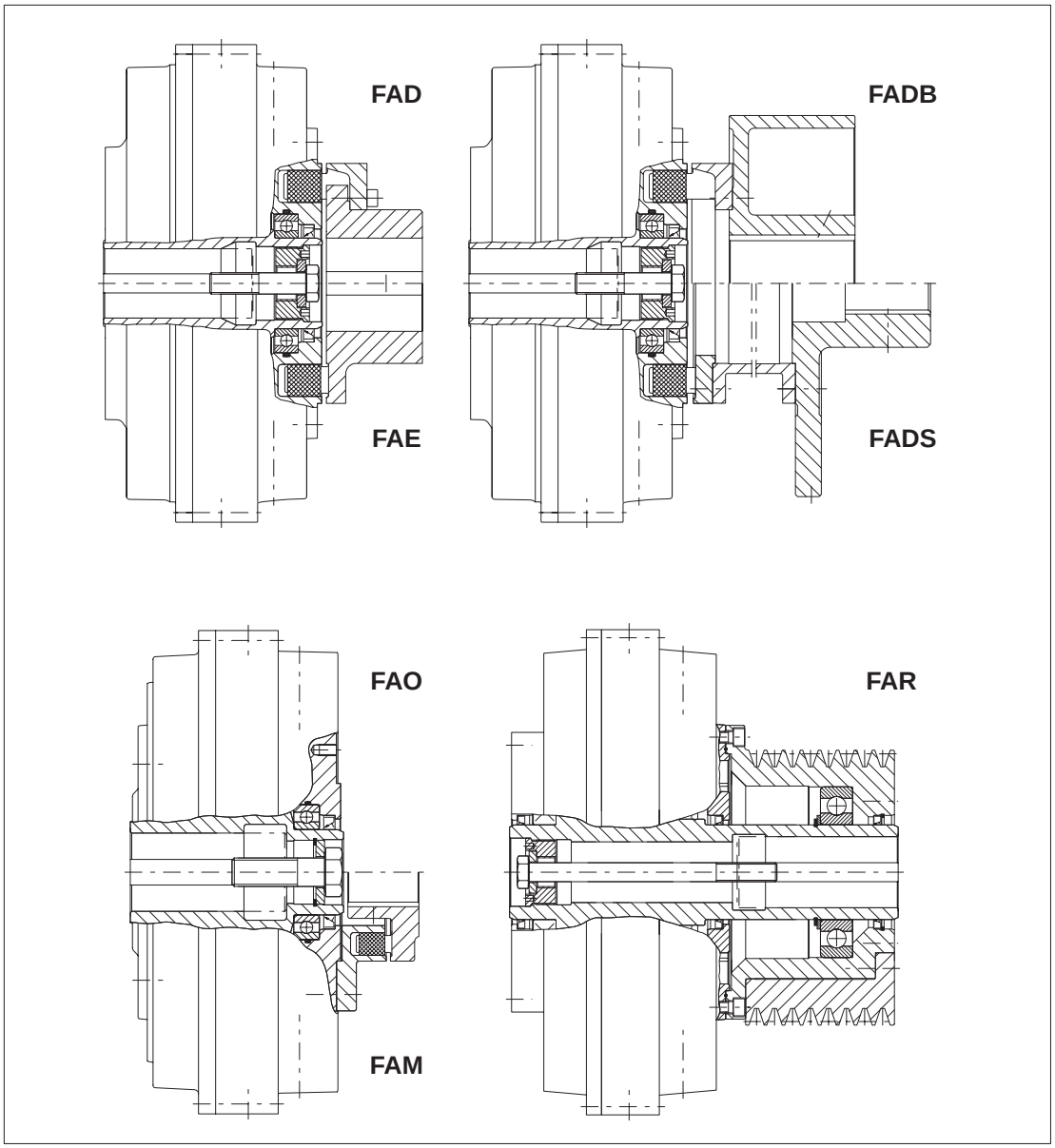

FLENDER
A. Friedr. Flender AG · 46393 Bocholt · Tel. 02871/92-0 · Telefax 02871/92-2596 · www.flender.com

Contents

1.	**Technical data**	**4**
1.1	General data	4
1.2	Data relating specifically to coupling	4
2.	**General notes**	**4**
2.1	Introduction	4
2.2	Copyright	4
3.	**Safety notes**	**5**
3.1	Proper use	5
3.2	Obligations of the user	5
3.3	Warnings and symbols used in these Instructions	5
4.	**Handling and storage**	**6**
4.1	Scope of supply	6
4.2	Handling	6
4.3	Storage of the coupling	6
4.4	Storage area for a protracted period	6
5.	**Technical description**	**7**
5.1	General description Type FA	7
5.2	Construction of couplings	7
5.3	Marking the coupling parts for explosion protection	8
5.4	Conditions of use for FLUDEX couplings in potentially explosive areas	9
6.	**Assembly**	**9**
6.1	Instructions for applying the finished bore and fitting the axial retaining means, set screws and balancing	9
6.1.1	Finished bore	9
6.1.2	Parallel keyway	11
6.1.3	Axial fastening	11
6.1.4	Set screws	12
6.1.5	Balancing	13
6.2	General information on installation	14
6.3	Mounting the coupling parts	14
6.4	Alignment	15
6.5	Possible misalignments	16
6.5.1	Axial misalignment	16
6.5.2	Angular misalignment	16
6.5.3	Radial misalignment	16
6.5.4	Permissible shaft misalignment values for radial misalignment $\Delta Kr_{perm.}$ and difference in gap dimension $\Delta S_{perm.}$	16
6.6	Assignment of tightening torques	17
7.	**Start-up**	**17**
7.1	Procedure before start-up	17
7.2	Fluid filling	17
7.2.1	Operating fluid: oil	19
7.2.2	Operating fluid: water/water emulsion	19
8.	**Operation**	**20**
8.1	General operating data	20
9.	**Faults, causes and remedy**	**20**
9.1	General	20
9.2	Possible faults	21
9.3	Incorrect use	21
9.3.1	Possible faults when selecting the coupling or coupling size	22
9.3.2	Possible faults when installing the coupling	22
9.3.3	Possible faults in maintenance	23

10. Maintenance and repair 23
10.1 Changing the operating fluid 23
10.2 Changing the shaft sealing rings 24
10.3 Maintenance interval of the N-EUPEX add-on coupling 24
10.4 Replacement of the flexible elements 24
10.5 Demounting the FLUDEX coupling 25
10.5.1 Demounting sizes 222-342 25
10.5.2 Demounting sizes 395-590 26
10.6 Demounting the FLUDEX-coupling 27
10.7 Reassembling the FLUDEX coupling 27
10.8 Refitting the FLUDEX coupling 27
10.9 Filling quantities for FLUDEX FA couplings size 297, 395 and 516 28
10.10 Filling quantities for FLUDEX FA couplings size 222, 342, 450 and 590 29

11. Spare parts, customer-service addresses 30
11.1 Spare-part and customer service addresses 30
11.2 Spare parts list Types FAO, FAK, FAD, FAE, FAM, FADB, FADS 31
11.3 Spare parts list, type FAR 32

12. Declaration by the manufacturer / Declaration of Conformity 37

1. Technical data

1.1 General data

These Operating Instructions (BA) apply generally to FLUDEX couplings of the FA.. type.

1.2 Data relating specifically to coupling

The order-specific data relating to a delivery are, if known in case of an order, listed on the title page. In this case this title page diverges from that stored on the Internet. The contents of the operating instructions are, however, in this case identical.

The supply order number serves as the coupling's ident number. This number appears on the coupling in light raised relief.

2. General notes

2.1 Introduction

These Operating Instructions (BA) are an integral part of the coupling delivery and must be kept in its vicinity for reference at all times.

Caution! **All persons involved in the installation, operation, maintenance and repair of the coupling must have read and understood these Operating Instructions and must comply with them at all times. We accept no responsibility for damage or disruption caused by disregard of these Instructions.**

The **"Coupling"** described in these Operating Instructions (BA) has been developed for stationary use in general engineering applications.

The coupling is designed only for the application described in section 1, "Technical data". Other operating conditions must be contractually agreed.

The coupling described in these Instructions reflects the state of technical development at the time these Instructions went to print.

In the interest of technical progress we reserve the right to make changes to the individual assemblies and accessories which we regard as necessary to preserve their essential characteristics and improve their efficiency and safety.

2.2 Copyright

The copyright to these Operating Instructions (BA) is held by **FLENDER AG.**

These Operating Instructions (BA) must not be wholly or partly reproduced for competitive purposes, used in any unauthorised way or made available to third parties without our agreement.

Technical enquiries should be addressed to the following works

FLENDER AG Telefon: 02871/92-2868
D 46393 Bocholt Telefax: 02871/92-2579

or to one of our customer-service addresses. A list of our customer-service addresses is given in section 11, "Spare parts, customer-service addresses".

3. Safety notes

3.1 Proper use

- The coupling has been manufactured in accordance with the state of the art and is delivered in a condition for safe and reliable use. Any changes on the part of the user which may affect safety and reliability are prohibited. This applies equally to safety features designed to prevent accidental contact.
- The coupling must be used and operated strictly in accordance with the conditions laid down in the contract governing performance and supply.

3.2 Obligations of the user

- The operator must ensure that all persons involved in installation, operation, maintenance and repair have read and understood these Operating Instructions (BA) and comply with them at all times in order to:

  – avoid injury or damage,

  – ensure the safety and reliability of the coupling,

  and

  – avoid disruptions and environmental damage through incorrect use.
- During transport, assembly, installation, dismantling, operation and maintenance of the unit, the relevant safety and environmental regulations must be complied with at all times.
- The housing of the FLUDEX coupling is made of aluminium (AC-Al-Si10Mg). Depending on the individual case, if necessary, further requirements must be taken into account when handling aluminium.
- The coupling must be operated, maintained or repaired only by authorised, duly trained and qualified personnel.
- All work must be carried out with great care and with due regard to safety.
- All work on the gear unit must be carried out only when it is at a standstill.
  The drive unit must be secured against being switched on accidentally (e.g. by locking the key switch or removing the fuses from the power supply). A notice should be attached to the ON switch stating clearly that work is in progress.
- The coupling must be fitted with suitable safeguards to prevent accidental contact. This fixture must also offer protection against spurting hot operating fluid without substantially impairing the coupling ventilation. The fusible safety plugs and filling plugs should remain accessible.
- The use of suitable operating fluids (usually oil) is necessary for the operation of the coupling. The instructions for use enclosed by the operating fluid manufacturer must be observed.
- The drive unit must be shut down as soon as changes to the coupling are detected during operation.
- If the coupling is intended for installation in plant or equipment, the manufacturer of such plant or equipment must ensure that the contents of the present Operating Instructions are incorporated in his own instructions.
- All spare parts must be obtained from FLENDER.

3.3 Warnings and symbols used in these Instructions

This symbol indicates safety measures which must be observed with regard to **explosion protection.**

This symbol indicates safety measures which must be observed to avoid **personal injury.**

Caution! This symbol indicates safety measures which must be observed to avoid **damaging the coupling.**

Note: This symbol indicates general **operating instructions** which are of particular importance.

4. Handling and storage

4.1 Scope of supply

The products supplied are listed in the despatch papers. Check immediately on receipt to ensure that all the products listed have actually been delivered. Parts damaged during transport or missing parts must be reported in writing immediately.

The equipment is delivered ready for operation, depending upon an order with or without fluid filling. Couplings filled with operating medium are marked by a corresponding label ("...L, HLP 32 DIN 51524/2, operating oil already put in") in the vicinity of the filling hole. Delivered separately with every coupling is a fusible safety plug (depending on design also a thermal circuit breaker) with sealing rings, a locking plate and a retaining screw, if provided for.

The coupling in design in accordance with the guideline 94/9/EC is provided with the CE identification mark as described in section 5.

4.2 Handling

⚠ **When handling FLENDER products, use only lifting and handling equipment of sufficient load-bearing capacity!**

Note: The coupling must be transported using suitable transport equipment only.

Different forms of packaging may be used depending on the size of the coupling and method of transport. Unless otherwise agreed, the packaging complies with the **HPE Packaging Guidelines.**

The symbols marked on the packaging must be observed at all times. These have the following meanings:

bild-transport

This way up	Fragile	Keep dry	Keep cool	Centre of gravity	Use no hand hook	Attach here

4.3 Storage of the coupling

Unless otherwise expressly agreed, the coupling is delivered in a preserved condition and can be stored in a covered, dry place for up to 3 months. If storage is provided for a protracted period, the unit should be treated with a long-term preservative agent on all outer surfaces with the exception of the aluminium housing (FLENDER must be consulted).

Caution! **Before cleaning the coupling and applying the long-term preservative agent, the flexible elements of the N-EUPEX add-on coupling must be removed. The shaft sealing rings must not come into contact with solvents.**

Correctly stored couplings retain their properties unchanged for up to five years. Unfavourable storage conditions and improper treatment of the flexible elements and/or seals will negatively affect their physical properties. Such negative effects may be caused by e.g. the action of oxygen, ozone, extreme temperatures, light, moisture, or solvents.

4.4 Storage area for a protracted period

The storage area must be dry and free from dust. The couplings must not be stored with chemicals, solvents, motor fuels, acids, etc. Furthermore, the flexible elements and seals should be protected against light, in particular direct sunlight and bright artificial light with a high ultraviolet content.

Caution! **The storage areas must not contain any ozone-generating equipment, e.g. fluorescent light sources, mercury vapour lamps, high-voltage electrical equipment. Damp storage areas are unsuitable. Ensure that no condensation occurs. The most favourable atmospheric humidity is below 65 %.**

5. Technical description

5.1 General description Type FA

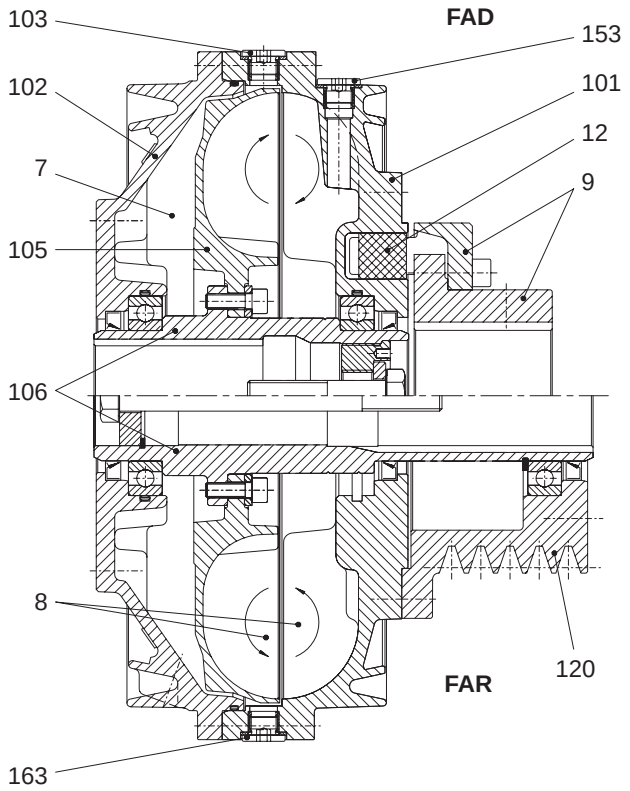

7	Compensating chamber
8	Working chamber
9	N-EUPEX add-on coupling
12	Flexible element (N-EUPEX)
101	Blade shell (outer gear)
102	Cover
103	Fusible safety plug
105	Blade wheel (inner wheel)
106	Hollow shaft
120	V-belt pulley
153	Filling plug
163	Screw plug

The FLUDEX coupling is a hydrodynamic fluid coupling working on the Föttinger principle. The coupling parts on the in- and output side are not connected to one other mechanically. The torque is transmitted by the fluid flowing in the coupling and conducted via radial blades. During sustained operation very low rotary speed slip occurs.

FLUDEX couplings of the FA.. series are sutiable for both directions of rotation. They can be mounted in a horizontal, angled or vertical position. The drive should preferably take place via the hollow shaft (106) and the blade wheel (105) to enable the advantages of the compensating chamber (7) and the working chamber geometry to be utilised.

If locked or overloaded by the driven machine, the coupling heats up until the fusing temperature of the safety fuse is reached.
When the safety fuse fuses, the operating fluid escapes and the drive motor is disconnected from the driven machine. To prevent the operating fluid spurting out, electronically or mechanically controlled thermal monitoring equipment (see separate opersting instructions) can be used.

5.2 Construction of couplings

FLUDEX couplings are made up of a few, robust parts.

The inner rotor includes the hollow shaft (106), on which the blade wheel (105) is mounted. The outer housing comprises the cover (102) and the blade shell (101), which are connected via a flanged screw connection.
The outer housing and the inner rotor are double-mounted one inside the other and sealed towards the outside by shaft sealing rings.

For filling the coupling, two filling plugs (153) are located in filling channels offset by 180 ° (to prevent overfilling). For this a screw plug (163), offset on the periphery (by approx. 60°), to be used for ventilation while filling, for checking the filling level and for draining off the operating fluid, is located in the coupling flange. Opposite it is the fusible safety plug (103).

In the standard design the fusing temperature of the fusible safety screw is 135°, and the material used for the seals is Perbunan (for a max. sustained operating temperature of 85 °C). As an extended standard (for sustained operating temperatures of up to 110 °C and/or synthetic oil), the coupling can be fitted with seals made of Viton. In this case a fusible safety plug with a fusing temperature of 160 °C is used in the coupling.

Couplings to be used in potentially explosive areas are designed with the fusible safety plugs (103) permitted for the temperature class.

The fusing temperature of the fusible safety plugs is stamped on their end faces, the **135 °C plugs also being marked red**, the **160 °C plugs green**.

For applications where frequent faults or locking of the drive may occur it is recommended that a thermal monitoring system be provided. This will prevent the operating fluid from escaping and being lost and the environment from being polluted and endangered. The transmitter (EOC system) or thermal circuit breaker (mechanical switching equipment) is screwed into the coupling flange in place of the screw plug (163). The fusible safety plug (103) remains in the coupling as an emergency safety device.

A thermal circuit breaker with a fusing temperature of 110 °C can be used on a coupling with Perbunan seals and a 135 °C fusible safety plug.

A thermal circuit breaker with a fusing temperature of 140 °C can be used on a coupling with Viton seals and a 160 °C fusible safety plug.

A 160 °C fusible safety plug can be used with an EOC system (transmitter release temperature of 125 °C), including with Perbunan seals.

The type **FAO** includes only the components of the fluid coupling (without attachment) and incorporates a connection flange point on the output side. The types **FAK/FAD/FAE/FAM** are couplings with N-EUPEX add-on coupling integrated on the output side for connecting two shafts. The types **FAKB/FADB** are FAK/FAD couplings with a brake drum. The type **FADS** is a FAD coupling with brake disk. The type **FAR** is a coupling with V-belt pulley on the output side.

In the flexible N-EUPEX add-on coupling the H-shaped Perbunan flexible elements are delivered in a standard Shore hardness of 80.

Coupling with worn flexible elements (12) (for wear mark ΔS_V, see section 10) must not be operated in potentially explosive areas.

5.3 Marking the coupling parts for explosion protection

Note: Couplings which are intended for use in potentially explosive areas must bear the following markings:

FLENDER AG	CE Ex II 2 G c T3 D160 °C II B
D 46393 Bocholt	- 30 °C ≤ T_a ≤ +50 °C
FLUDEX coupling - year of construction	CE Ex I M2
Marking of the fusible safety plug:	Ex T3

The N-EUPEX add-on coupling must have Ex stamped on the hub parts.

5.4 Conditions of use for FLUDEX couplings in potentially explosive areas

The coupling with fusible safety plug with indication Ex T3 is suited for the service conditions specified in Guideline 94/9/EC:

- Equipment group II (use above ground) temperature class T3 of category 2 and 3 for areas where there are explosible gas, vapour, mist, air mixtures as well as for areas where dust can form explosible atmospheres.
- Equipment group I (underground applications) of the category M2

Ex **If it is to be used below ground in potentially explosive areas, the coupling, which is made of aluminium, must be provided with a robust casing to preclude the risk of ignition from e.g. friction, impact or friction sparks.**
The depositing of heavy metal oxides (rust) on the coupling housing must be precluded by the casing or other suitable precautions.

Ex **The FLUDEX coupling can be delivered with attached brake disk or V-belt pulley.**
The supplier of the subassembly is responsible for the construction of the belt drive or brake disk in conformity to the guidelines. To be noted are, amongst other things, hazards from electrostatic charging and hot surfaces.
According to BGR 132 the use of V-belts in conjunction with IIC gases is not permitted.

6. Assembly

The FLUDEX coupling is delivered exclusively with a finish-bored and grooved hollow shaft (106).

At the customer's express request FLENDER also delivers unbored or prebored coupling parts for the N-EUPEX add-on coupling.

The necessary refinishing must be carried out in strict compliance with the following specifications and with particular care!

Caution! **Responsibility for carrying out the refinishing is borne by the orderer.**
FLENDER can accept no guarantee claims arising from unsatisfactory refinishing!

Ex **Couplings with CE marking for use in potentially explosive areas are delivered exclusively with finish-bored hubs.**

6.1 Instructions for applying the finished bore and fitting the axial retaining means, set screws and balancing

6.1.1 Finished bore

- On part 1: Remove flexible elements
- Remove preservative from coupling parts.

⚠ **Note manufacturer's instructions for handling solvent.**

When machining the finished bore the parts must be carefully aligned. For the permissible radial and axial runout errors and the permissible cylindricity tolerances, refer to DIN ISO 286. The parts must be mounted on the marked faces (⌐).

⚠ **In the case of part 2/3, part 4 and part 9 great caution is necessary owing to the rotating cams.**

Caution! **The maximum permissible bore diameters (see table 6.1.1 a) are designed for drive-type fastenings without taper action to DIN 6885/1 and must not under any circumstances be exceeded. The finish-machined bores must be 100 % checked with suitable measuring equipment.**

If other shaft - hub connections (e.g. taper or stepped bore, etc.) are to be used instead of the flanged sleeve connections provided for, FLENDER must be consulted.
Flanged sleeve connections with taper action are not permissible.

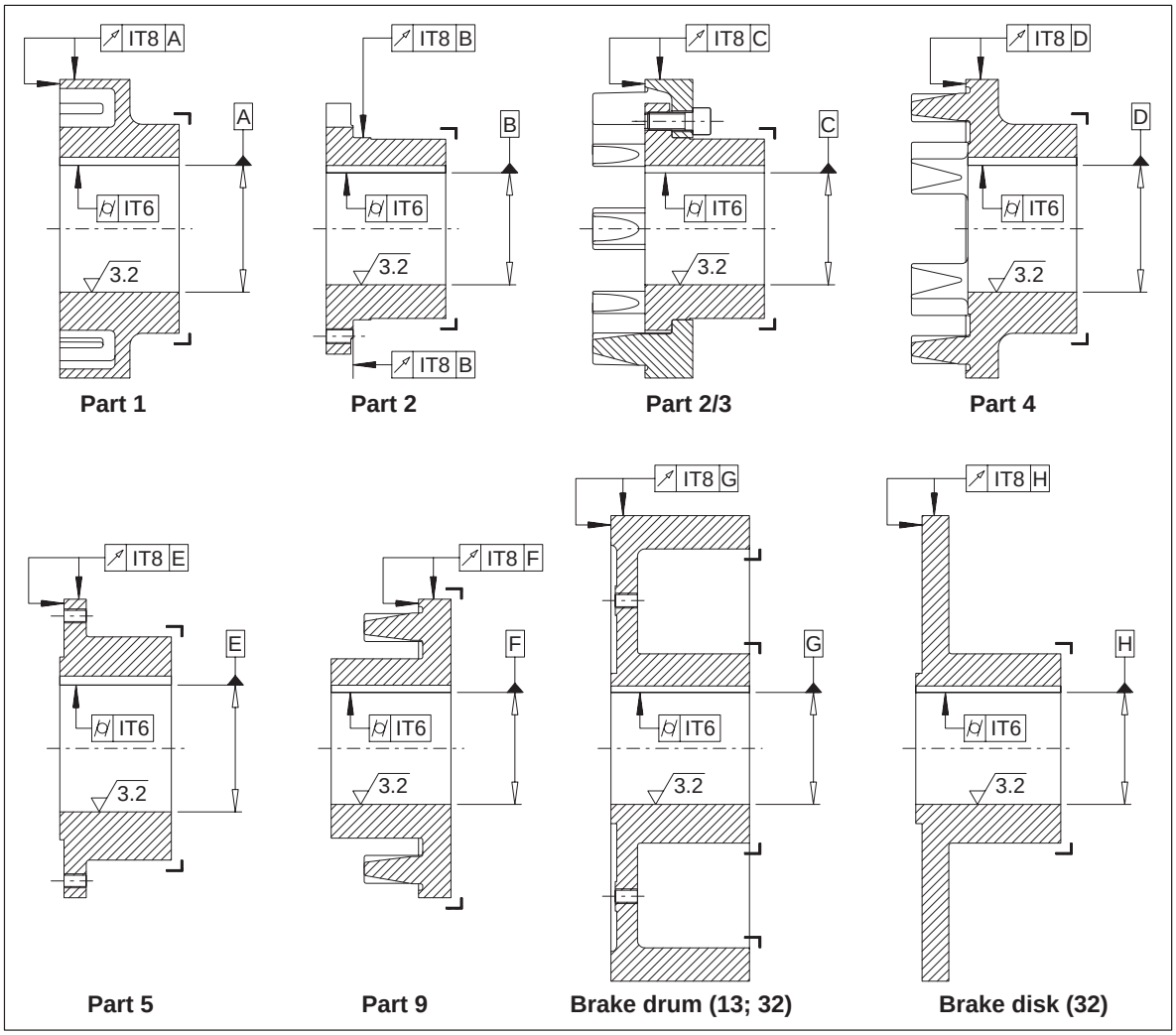

FLUDEX Size	N-EUPEX Size	max. bore D_1						
		Part 1	Part 2 Part 2/3	Part 4	Part 5	Part 9	Brake drum (13; 32)	Brake disk (32)
222	**110**	–	38	48	42	38	38	42
297	**125**	55	45	55	60	48	55	60
342	**140**	60	50	60	70	52	60	70
395	**225**	–	85	90	80	–	80	80
450	**250**	–	95	100	90	–	80	90
516	**315**	–	120	–	100	–	100	100
590	**315**	–	120	–	100	–	110	100

Table 6.1.1 a : max. bores of the N-EUPEX add-on coupling

For drive by means of parallel keys the following fit pairs are prescribed for the bores:

Selection of fit	Bore D_1 over mm	Bore D_1 to mm	Shaft tolerances	Bore tolerances
Shaft tolerances to FLENDER standard		25	k6	H7
	25	100	m6	
	100		n6	
Shaft tolerances to DIN 748/1		50	k6	H7
	50		m6	
System standard shaft		50	h6	K7
	50			M7
	all		h8	N7

Table 6.1.1 b : Fit pairs

Caution! **The assigned fits must be adhered to in order, on the one hand, to keep the play in the shaft-hub connection as low as possible, depending on utilisation of the tolerance zones, or, on the other, to keep the hub tension arising from the oversize within the permissible load limit. Failure to adhere to the fits may impair the shaft-hub connection.**
If the tolerance values of the shafts deviate from those in table 6.1.1 b above, FLENDER must be consulted.

Failure to observe these instructions may result in breakage of the coupling. Danger from flying fragments!
The coupling then becomes an explosion hazard.

6.1.2 Parallel keyway

The parallel keyways must be designed in accordance with DIN 6885/1. If the keyway geometry deviates, FLENDER must be consulted. Taper keys or nose keys (gib headed keys) are not permissible.

The parallel keyways must be designed to suit the available parallel keys. For parallel keyways the tolerance zone of the hub keyway width **ISO JS 9** must be adhered to.

Caution! **The parallel keyway must be applied as shown in the illustration.**

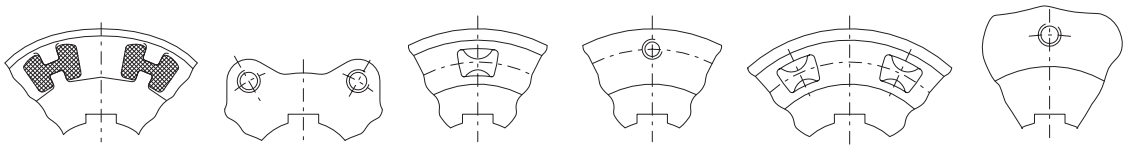

6.1.3 Axial fastening

The hollow shaft (106) of the FLUDEX coupling is secured axially with a locking plate (140) and retaining screw (141) (included in delivery) (for tightening torques, see table 6.1.3).

Retaining screw thread	M6	M8	M10	M12	M16	M20	M24	M30
Tightening torque [Nm]	10	25	49	86	160	300	500	800

Table 6.1.3: Tightening torques of the retaining screws

A set screw or end plate must be provided to secure the N-EUPEX add-on coupling axially. If end plates are used, FLENDER must be consulted with regard to machining the recesses in the coupling parts.

6.1.4 Set screws

Hexagon socket set screws with cup points to DIN 916 must be used for set screws.

The following guidelines must be observed!

The length of the set screw must be selected so that it fills the threaded hole, but does not project from the hub ($L_{min} = d_1 \times 1.2$).

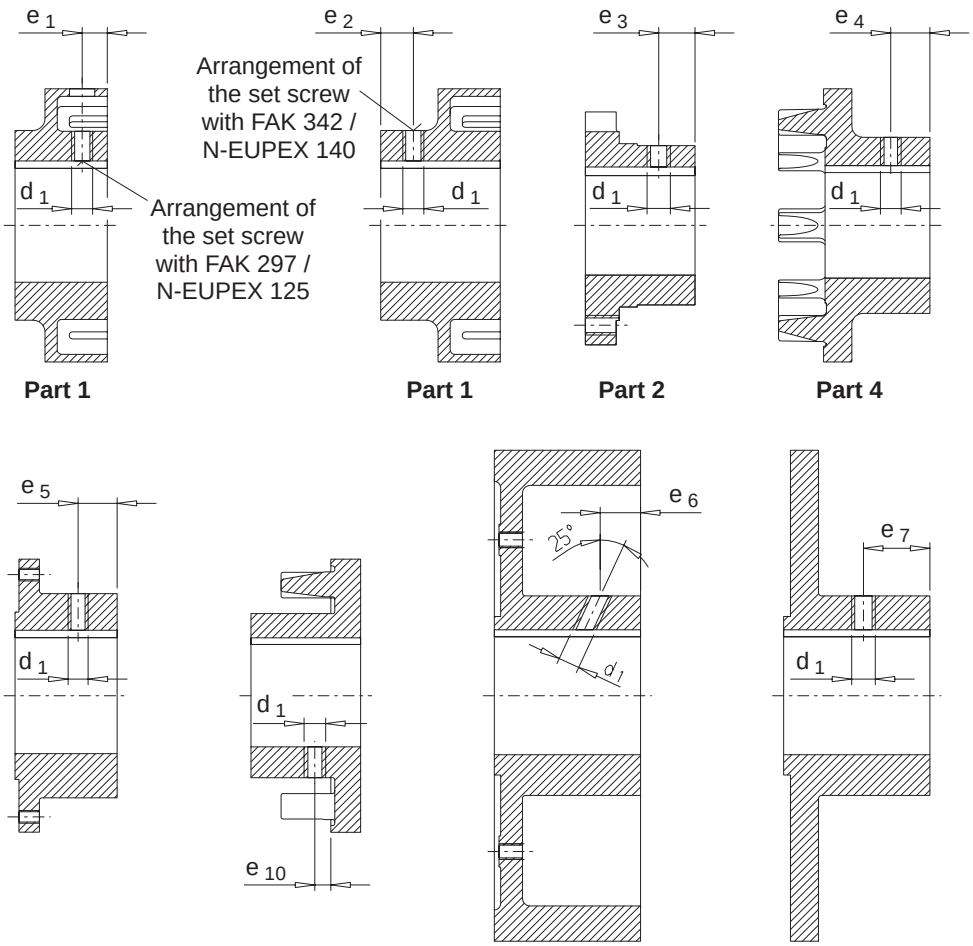

FLUDEX Size	N-EUPEX Size	d_1	e_1	e_2	e_3	e_4	e_5	e_6	e_7	e_{10}	Tightening torque of the set screws [Nm]
222	**110**	M 6	–	–	*9	18	25	12	25	9	4
297	**125**	M 8	20	–	12	20	25	12	40	12	8
342	**140**	M 8	–	13	15	22	30	12	40	15	8
395	**225**	M12	–	–	35	40	50	25	60	–	25
450	**250**	M16	–	–	40	45	55	25	85	–	70
516	**315**	M16	–	–	50	–	65	30	85	–	70
590	**315**	M16	–	–	50	–	65	30	85	–	70

Table 6.1.4 a : Set screw assignment and tightening torques of the set screws

*) Note following position of the set screw!

Caution! **The set screws must always be positioned on the keyway. An exception are the following coupling parts:**

Part 2: Size 110: Bore $D_1 \geq 30$ mm set screw displaced by 180° relative to the keyway.

Part 9: all sizes: Set screw displaced approx. 180° relative to the keyway, arranged between the cams.

6.1.5 Balancing

FLUDEX couplings are delivered balanced.

Prebored N-EUPEX add-on couplings are delivered unbalanced. It is recommended that these parts are balanced to suit the application after finish-boring (see DIN ISO 1940 and DIN 740/2), but to min. balancing quality G16.

Balancing is normally done by drilling material away.

If one-level balancing is required on brake disk / brake drum (13; 32), the material on the front end at the disk's bottom is to be removed. When two-level balancing the brake disk / brake drum (13; 32) should be balanced together with part 10 or part 3.

Caution!

With one-level balancing, on part 1 material must be removed from between the webs, the bottom must however not be drilled right through.
On part 4 and part 9 the material must be removed from the end face between the cams. Sufficient space must be left between the balancing hole and the cam to avoid weakening the cam connection.
On part 13 / 32 the brake surface must not under any circumstances be damaged.

Since the coupling part 3, the cam part is always in a balanced condition, the coupling part 2 can be balanced individually or together with the fitted part 3.

Finish-bored couplings or coupling parts are balanced according to the customer's specifications.

Arrangement of the balancing bore with one-level balancing

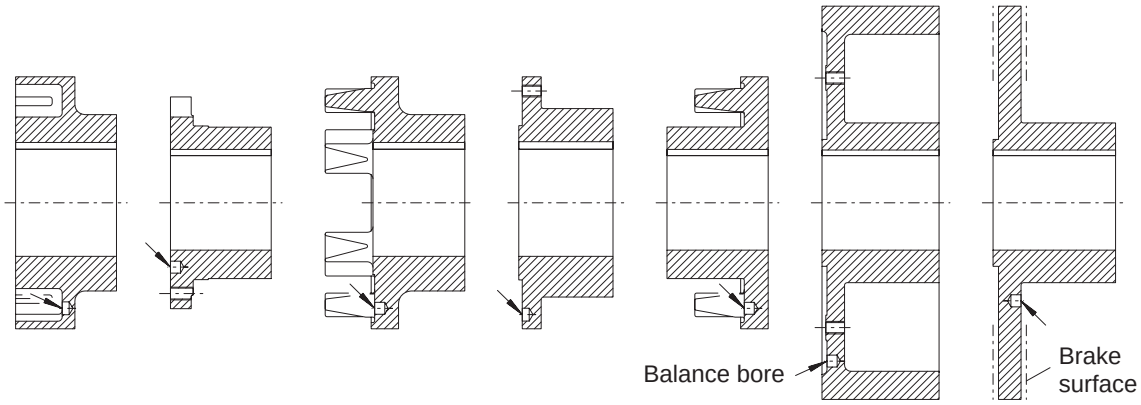

Part 1	Part 2	Part 4	Part 5	Part 9	Brake drum (13; 32)	Brake disk (32)

Arrangement of the balancing bore with two-level balancing

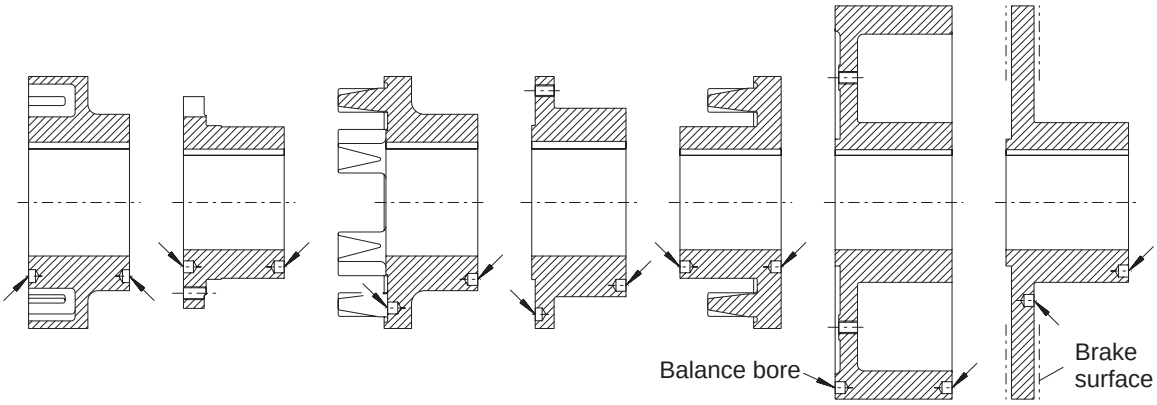

Part 1	Part 2	Part 4	Part 5	Part 9	Brake drum (13; 32)	Brake disk (32)

6.2 General information on installation

During assembly, the ”Safety Instructions” in Section 3 must be observed.

Assembly and installation work must be done with great care by trained and qualified personnel.

As early as during the planning phase it must be ensured that sufficient space is available for installation and subsequent care and maintenance work.

Adequate lifting equipment must be available before beginning the installation and assembly work.

If lacquered couplings are used in potentially explosive areas, the requirements made of the conductivity of the lacquer and the limitation on the thickness of the lacquer applied must be observed in accordance with EN 13463-1. Where lacquer coatings have a thickness less than 200 µm, no electrostatic charge is to be expected. Where lacquer coatings are thicker than 200 µm, an electrostatic charge must be avoided, e.g. by cleaning the coupling.

6.3 Mounting the coupling parts

Before beginning installation, the shaft ends, the brake disk, the flange surfaces, and the coupling parts must be carefully cleaned and the shaft ends rubbed with a lubricant. Before cleaning the N-EUPEX coupling parts with solvent the flexible elements must be removed.

Note manufacturer’s instructions for handling solvent.

Caution! **The coupling components and the brake disk should be fitted with the aid of suitable equipment to avoid possible damage to the shaft bearings through axial joining forces.**
Always use suitable lifting equipment.

The FLUDEX coupling must be pulled on by means of a locking plate (140) and a spindle, as shown in the picture. The coupling must be pulled on until it rests against the shaft shoulder.

Caution! **Under no circumstances must pulling on forces be applied through the coupling housing.**

After being pulling on the FLUDEX coupling must be secured axially by means of a locking plate (140) and a retaining screw (141) (see item 6.1.3).

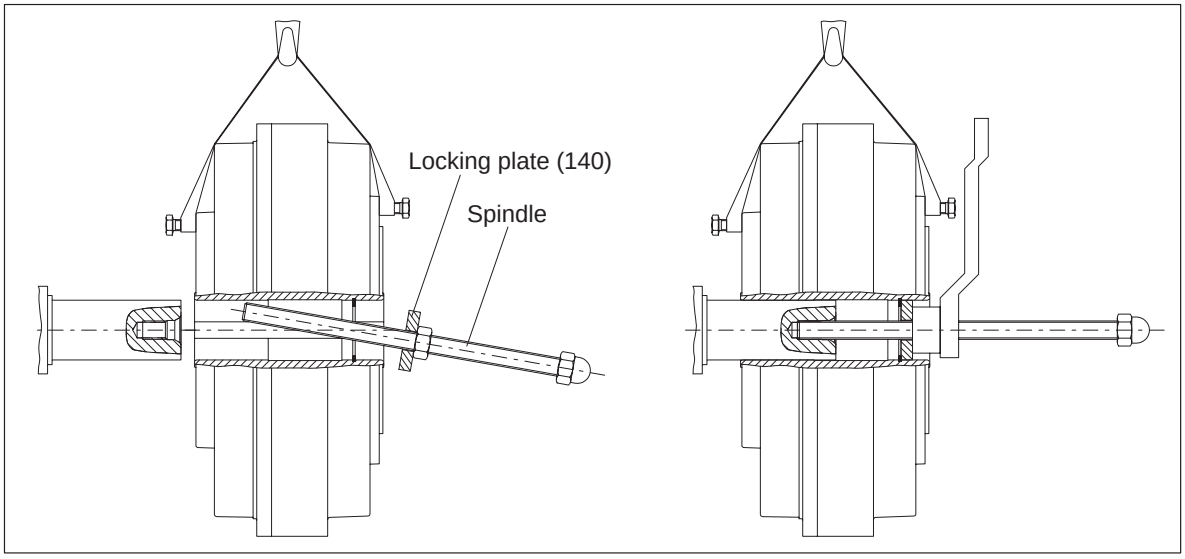

If necessary, heating the brake disk and the N-EUPEX coupling hubs (to max. + 150 °C) will facilitate fitting. With temperatures over + 80 °C the flexible elements must be removed from the coupling part 1 before heating. Before fitting coupling part 2 the part 3 must be located on the shaft.

Take precautions to avoid burns from hot components!

The N-EUPEX add-on coupling must be mounted using the entire length of the bore or until it comes into contact with the shaft shoulder. Axial securing is effected by means of the set screw or end plate.

Caution! **Tightening the set screws to a tightening torque in accordance with item 6.1.4.**

Failure to observe these instructions may result in breakage of the coupling.
Danger from flying fragments!
The coupling then becomes an explosion hazard.

Remount the removed flexible elements. It must be ensured that the flexible elements are of identical size and have identical markings. The coupling parts must be only at a maximum temperature of + 80 °C.

Move together the machines to be coupled.

Danger of squeezing!

Dimension S must be adhered to. The tightening torques of the bolted connections of part 2/3, part 10, and part 32 is to be checked (for tightening torques and distance dimension S see item 6.6 and section 1).

Caution! **If the FLUDEX coupling is screwed to components which conduct axial forces or bending moments into the coupling, FLENDER must be consulted.**

6.4 Alignment

FLUDEX couplings in combination with the flexible N-EUPEX add-on coupling absorb positional deviations of the shaft ends to be connected up to the values shown in item 6.5.
When aligning, the radial and angular misalignment of the shaft ends must be kept as small as possible, because, other conditions being equal, this increases the service life of the flexible elements.

The alignment must be checked once more with the foundation bolts of the motor and gear unit/driven machine tightened.
Any shaft misalignment through heating during operation must be taken into account as far as possible.

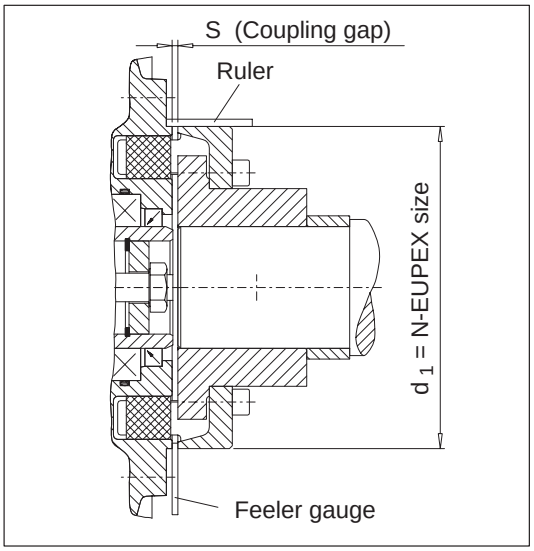

6.5 Possible misalignments

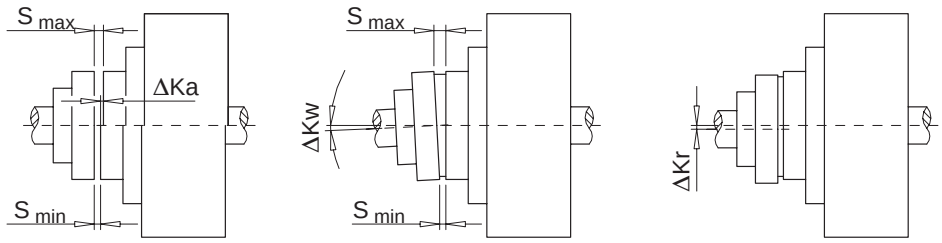

Axialer misalignment Fig. 6.5.1 | Angular misalignment Fig. 6.5.2 | Radial misalignment Fig. 6.5.3

Misalignments of the coupling parts in relation to each other can be caused by inaccurate alignment during assembly, but also by actual operation of the equipment (expansion due to heat, shaft deflection, insufficiently rigid machine frames, etc.).

Caution! **The following maximum permissible misalignments must by no means be exceeded during operation.**

6.5.1 Axial misalignment

Axial misalignment ΔKa (Fig. 6.5.1) of the coupling parts relative to one another is possible within the ”permissible error” for dimension S (see title page).

6.5.2 Angular misalignment

The angular misalignment ΔKw (Fig. 6.5.2) can usefully be measured as the difference in the gap dimension ($\Delta S = S_{max} - S_{min}$). For the permissible values for the difference in the gap dimension, refer to item 6.5.4.

If required, the permissible angular misalignment ΔKw can be calculated as follows:

$$\Delta Kw_{perm.} \text{ in rad} = \frac{\Delta S_{perm.}}{d_1}$$

$$\Delta Kw_{perm.} \text{ in degr.} = \frac{180}{\pi} \times \frac{\Delta S_{perm.}}{d_1}$$

for $\Delta S_{perm.}$ see item 6.5.4

d_1 corresponds to N-EUPEX size in mm

6.5.3 Radial misalignment

For the permissible radial misalignment $\Delta Kr_{perm.}$ (Fig. 6.5.3) - depending upon the operating speed -, refer to item 6.5.4.

6.5.4 Permissible shaft misalignment values for radial misalignment $\Delta Kr_{perm.}$ and difference in gap dimension $\Delta S_{perm.}$

Values given in mm, rounded off

FLUDEX	N-EUPEX	Coupling speed in 1/min								
Size	**Size**	250	500	750	1000	1500	2000	3000	4000	5000
222	**110**	0.5	0.35	0.3	0.25	0.2	0.2	0.15	0.1	0.1
297	**125**	0.5	0.4	0.3	0.25	0.25	0.2	0.15	0.15	0.1
342	**140**	0.6	0.4	0.35	0.3	0.25	0.2	0.2	0.15	
395	**225**	0.8	0.55	0.5	0.4	0.35	0.3	0.25		
450	**250**	0.8	0.6	0.5	0.4	0.35	0.3			
516	**315**	1	0.7	0.6	0.5	0.4	0.35			
590	**315**	1	0.7	0.6	0.5	0.4	0.35			

The numerical values of the table can be calculated as follows:

$$\Delta Kr_{perm.} = \Delta S_{perm.} = \left(0.1 + \frac{d_1}{1000}\right) \times \frac{40}{\sqrt{n}}$$

Coupling speed n in 1/min
d_1 corresponds to N-EUPEX size in mm
Radial misalignment $Kr_{perm.}$ in mm

Caution! **Angular and radial misalignment may occur simultaneously.**

6.6 Assignment of tightening torques

FLUDEX Size	N-EUPEX Size	Tightening torque T_A and wrench width S_w for screws Part no.													
		13		22 / 23		103		110 / 142 / 163		121		130 / 131		153	
		T_A Nm	S_w mm	T_A Nm	S_w mm	T_A Nm	S_w mm	T_A Nm	S_w mm	T_A Nm	S_w mm	T_A Nm	S_w mm	T_A Nm	S_w mm
222	**110**	14	6	25	6	22	6	-	-	18.7	6	8	10	25	7
297	**125**	17.5	6	25	6	60	10	75	19 / 27 / 10	18.7	6	8	10	25	7
342	**140**	29	8	49	8	60	10	75	19 / 27 / 10	31	8	21	13	75	10
395	**225**	86	10	86	10	60	10	75	19 / 27 / 10	54	10	21	13	75	10
450	**250**	145	14	210	14	60	10	75	19 / 27 / 10	54	10	40	17	75	10
516	**315**	200	14	210	14	60	10	75	19 / 27 / 10	135	14	40	17	75	10
590	**315**	200	14	210	14	60	10	75	19 / 27 / 10	135	14	73	19	75	10

Table 6.6: Assignment of tightening torques (for part nos. refer to Section 11)

Note: Tightening torques apply to screws with untreated surfaces which are not or only lightly oiled (coefficient of friction $\mu = 0.14$). The use of lubricant paint or the like, which affects the coefficient of friction μ, is not permitted.

Note: The tightening torques of the set screws are specified in item 6.1.4.

7. Start-up

7.1 Procedure before start-up

Before starting up check the flexible elements for correct seating, i.e. the flexible elements must sit flush with the end face of the hub, and the set screws for tightness, check and, if necessary, adjust the alignment and the gap dimension S and check all screw connections for the specified tightening torques (see section 1 and section 6).

7.2 Fluid filling

For use below ground specifically permitted operating fluids only may be used.

The behaviour and the efficiency of the FLUDEX coupling is decisively affected by the quantity of operating fluid put in. As the filling increases, so does the transmitting capacity of the coupling, and the motor load during starting and the max. overload torque on the coupling rises. Operating slip decreases with the identical load.

FLUDEX couplings must not be filled up to more than 80-85% of the total volume (limited by the overfill safety system). As a result of the higher temperature-dependant volume expansion of the operating fluid compared with the aluminium housing higher filling results in a sharp rise in pressure in the coupling, which can result in the coupling being irreparably damaged before the fusing temperature of the fusible safety plug (103) is reached.

The operating fluid must be put in at the filling plug (153). Only these filling holes are provided with a filling channel, which offers protection gainst accidental overfilling. To better ventilate the inner chamber, the screw plug (163) inserted in the outer flange, or, on the size 222, the second fusible safety plug (103), should be unscrewed. It is set at an appropriate angle so that, in the event of imminent overfilling, the excess can escape there.

Caution! **The quantity to be put into the coupling is determined in accordance with the order. The filling quantity in litres is stamped on the coupling and specified in section 1.**

Marking lines with litre quantities have been cast in raised relief on the coupling housing to assist filling the coupling and checking the filling level.

When filling or checking the filling level the mark with the required filling quantity (in the case of intermediate values the corresponding intermediate position) must be turned to the top position (12 o'clock).

In the case of filling above the filling plug (153) the coupling is filled with the required quantity, if the filling level has reached the lip of the hole for the screw plug (163).

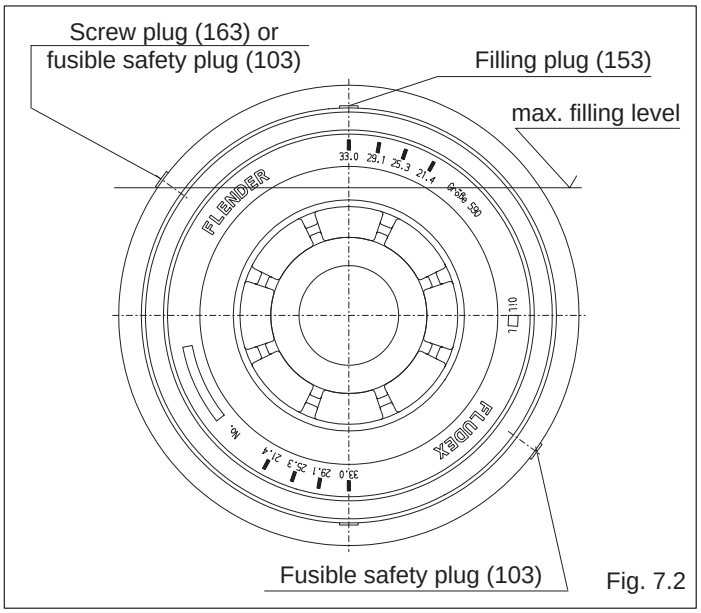

Fig. 7.2

After filling tighten filling plug (153) and screw plug (163)/fusible safety plug (103) (for tightening torques, see section 6, item 6.6) and check coupling for leaktightness by carrying out a short test run. This may be done by holding a clean piece of paper parallel to the turning axis and in close to the rotating surface envelope of the coupling. Any operating fluid spurting out will be visible on the paper.

Caution! **FLUDEX couplings must not lose any operating fluid, as this loss may result in a rise in slip and coupling temperature and ultimately to a fusing of the fusible safety plug (103).**

Then fit the coupling guard to prevent unintentional contact.

Faults in the drive (e.g. locking of the output side) may result in the coupling overheating. If the fusing temperature of the fusible safety plug is reached, the insert will melt and the hot operating fluid (oil, water) escape. The coupling protection must therefore be so designed as to also guarantee protection against operating fluid spurting out without appreciably impairing the ventilation of the coupling. The fusible safety plugs (103) and the filling plugs (153) should be accessible.

⚠ **Rotating parts must be secured by the purchaser against accidental contact. The coupling protection must also protect against spurting hot operating fluid without appreciably impairing ventilation (see also information on the coupling).**

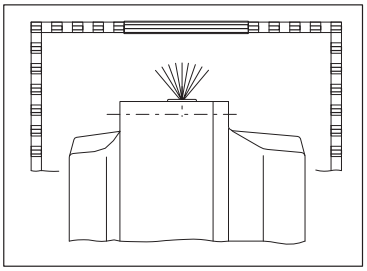

Ex **If it is to be used below ground in potentially explosive areas, the coupling, which is made of aluminium, must be provided with a robust casing to preclude the risk of ignition from e.g. friction, impact or friction sparks.**
The depositing of heavy metal oxides (rust) on the coupling housing must be precluded by the casing or other suitable precautions.

Ex **Couplings to be used in potentially explosive areas are designed with the fusible safety plugs (103) permitted for the temperature class. The coupling is marked with the temperature class of the fusible safety plug (103).**
It must be ensured that the drive shuts off not later than 5 minutes after the fusible safety plug (103) is fused.

7.2.1 Operating fluid: oil

In the case of orders without performance data the filling quantity is not entered. In these cases, for operation with oil the filling quantity for the respective coupling size can be obtained from the filling quanitity tables in section 10, item 10.9 and item 10.10 independently of the speed and output to be transmitted (and possibly the motor output).

Caution! **The filling quantity tables in section 10 apply solely to oil fillings.**

HL or HLP hydraulic oils to DIN 51 524 Part 1 and part 2 of the VG 22 or VG 32 ISO viscosity classes must be used.

Caution! **The oil quality and purity determines the useful life of FLUDEX bearings and shaft sealing rings.**

Company	ARAL	BP	Castrol	Esso	Mobil	Shell	TEXACO
Description	Aral Degol BG 32	BP Energol HL 22 + HLP 22	Hyspin SP22 + SP32	TORQUE FLUID N 45	Mobil DTE 22	Shell Tegula Öl 32	Rando-Oil 32
	Aral Vitam GF 22	BP Energol HL 32 + HLP 32	Hyspin DSP22 + DSP32	TERESSO 32	Mobil DTE 24	Shell Tellus Öl 22	Torque-Fluid 32
	Aral Vitam GF 32	BP Energol HLP-D 32	Tribol 943 AW22 + AW32	NUTO H 22	Mobil Vactra Oil Light	Shell Tellus Öl C22	
				NUTO H 32	Mobilfluid 125		

Table 7.1: Recommended oil grades

⚠ **Observe manufacturer's instructions when handling the operating fluid!**

7.2.2 Operating fluid: water/water emulsion

Caution! **The coupling must be protected against freezing.**

⚠ **Observe manufacturer's instructions when handling the operating fluid!**

Caution! **Not every FLUDEX coupling is suitable for use with water or water emulsion as an operating fluid.**
FLUDEX couplings designed for water fillings are marked as follows in the area of the filling plug: " ▽ W "

⚠ **If water or water emulsion is used as operating fluid, only fusible screws with a maximum fusing temperature of 110 °C are permitted. At a higher fusing temperature excessive strain is put on the coupling housing by the operating fluid vapour pressure.**

8. Operation

8.1 General operating data

During operation of the coupling watch for:

– changes in running noise

– sudden shocks

Caution!

If any irregularities are noticed during operation, switch the drive assembly off at once. Determine the cause of the fault, using the table in section 9.
This table contains a list of possible faults, their causes and suggested remedies.
If the cause cannot be identified or the unit repaired with the facilities available, you are advised to contact one of our customer-service offices for specialist assistance (see section 11).

9. Faults, causes and remedy

9.1 General

The following irregularities can serve as a guide for fault tracing.

Where the system is a complex one, all the other component units must be included when tracing faults.

The coupling must run with little noise and without vibration in all operating phases. Irregular behaviour must be treated as a fault requiring immediate remedy.

Caution!

FLENDER will not be bound by the terms of the guarantee or otherwise be responsible in cases of improper use of the coupling, modifications carried out without FLENDER's agreement, or use of spare parts not supplied by FLENDER.

⚠

When remedying faults and malfunctions, the gear unit must always be taken out of service.
Secure the drive unit to prevent it from being started up unintentionally.
Attach a warning notice to the start switch!

9.2 Possible faults

Malfunctions	Possible causes	Remedy
Sudden changes in the noise level and/or sudden vibrations.	Change of alignment.	Take the system out of service. If necessary, rectify causes of alignment change (e.g. tighten loose foundation bolts). Check and, if necessary, adjust alignment (see section 6). Wear check, procedure as described in section 10.
	Flexible elements (12) worn	Take the system out of service. Demount coupling and remove remains of flexible elements (12) Check and replace damaged coupling parts Flexible elements (12) must be changed in sets; use only identical N-EUPEX flexible elements (12) Assembly of coupling according to section 6 and section 7.
No torque transmission.	The fusible safety screws have fused through overheating or locking and the fluid is escaping from the coupling	Take the system out of service. Rectify the cause of the overheating or locking Fit new fusible safety plugs with new sealing rings Refill the coupling as described in section 7.

Table 9.2: Possible faults

If the torque is being transmitted with worn N-EUPEX flexible elements (12) and metal parts are consequently in contact, proper operation within the meaning of the explosion protection requirements or Guideline 94/9/EC can no longer be guaranteed.

Measurement and assessment of the wear condition of the N-EUPEX flexible elements (12) in accordance with section 10.

9.3 Incorrect use

Experience has shown that the following faults can result in incorrect use of the FLUDEX coupling. In addition to observing the other instructions in this BA, care must therefore be taken to avoid these faults. Guideline 94/9/EC requires the manufacturer and user to exercise especial care.

Failure to observe these instructions may result in breakage of the coupling. Danger from flying fragments!

Through incorrect use the coupling may become an explosion hazard.

Caution! **Incorrect use of the FLUDEX coupling can result in damage to the coupling.**

Caution! **Coupling damage may result in stoppage of the drive and the entire system.**

9.3.1 Possible faults when selecting the coupling or coupling size

- Important information for describing the drive and the environment will not be communicated to others.
- System power too high.
- System speed too high or too low.
- Starting frequency too high.
- The ventilation of the coupling is inadequate.
- Chemically aggressive environment not taken into consideration.
- The ambient temperature is not permissible. See also section 5.
- Machining of a finished bore with incorrect diameter and incorrect fit assignment (see section 6 and title page).
- The transmission capacity of the shaft-hub connection is not appropriate to the operating conditions.

9.3.2 Possible faults when installing the coupling

- Components with transport or other damage are being fitted.
- When mounting coupling parts in a heated condition, already mounted N-EUPEX flexible elements (12) are being excessively heated
- The shaft diameter is outside the specified tolerance range.
- Coupling parts are being interchanged, i.e. their assignment to the specified direction of drive is incorrect.
- Specified axial fixtures are not fitted.
- Prescribed tightening torques are not being adhered to.
- Alignment or shaft misalignment values do not match the operating instructions.
- The incorrect operating fluid or the incorrect quantity of operating fluid is being put in.
- The coupled machines are not correctly fastened to the foundation, so a shifting of the machines e.g. through loosening of the foundation screw connection is causing excessive displacement of the coupling parts.
- N-EUPEX flexible elements (12) are being omitted or incorrectly positioned.
- The coupling protection does not comply with the guidelines to be applied. It considerably restricts ventilation of the coupling.
- Operating instructions are being changed without authorisation.
- Components are being fitted to the coupling which transmit excessive axial forces or bending moments to the coupling.
- Add-on parts such as belt drives or brake disks are not designed in compliance with the guideline 94/9/EC and are an explosion hazard.

9.3.3 Possible faults in maintenance

- Maintenance intervals are not being adhered to.
- The incorrect operating fluid or the incorrect quantity of operating fluid is being put in.
- Original FLENDER spare parts are not being used.
- Prescribed tightening torques are not being adhered to.
- Old or damaged N-EUPEX flexible elements (12) are being used.
- Fusible safety plugs (163) with an unsuitable fusing temperature are being used.
- Leakage in the vicinity of the coupling is not being identified and as a result chemically aggressive media are damaging the coupling.

10. Maintenance and repair

⚠ **All work on the gear unit must be carried out only when it is at a standstill. The drive unit must be secured against being switched on accidentally (e.g. by locking the key switch or removing the fuses from the power supply). A notice should be attached to the ON switch stating clearly that work is in progress.**

⚠ **Risk of burns after switching off!**
Allow FLUDEX coupling to cool down sufficiently before beginning work!

10.1 Changing the operating fluid

⚠ **Never change the operating fluid immediately after operation!**
There is a risk of scalding!
Allow the coupling and the operating fluid to cool down!

The operating fluid must be changed in accordance with the specifications in table 10.1.

When changing the operating fluid, care must be taken that the old operating fluid is completely drained off. This can be done on size 222 through the holes in the fusible safety plugs (103) and on sizes 297-590 through the holes in the screw plugs (163).

⚠ **Observe the environmental requirements in force!**

Operating temperatures/ special measures	max. operating hours	max. years of use
max. 80 °C	10000	5
max. 95 °C or frequent temperature peaks above 100 °C: use of Viton seals necessary	5000	2
above 95 °C only suitable synthetic oils permitted use of Viton seals necessary	according to the specifications of the operating fluid manufacturer	according to the specifications of the operating fluid manufacturer

Table 10.1: Operating temperatures, operating hours and years of use

Different operating conditions and changing frequencies are permitted with the agreement of the operating fluid manufacturer.

10.2 Changing the shaft sealing rings

Shaft sealing rings are wearing parts subjected to relatively low stresses in the coupling. On couplings which are filled with oil no maintenance interval need be adhered to.

On couplings which are filled with water the shaft sealing rings of the inner seal must be replaced after 12 000 operating hours or after 2 years of operation. We recommend also replacing the other seals and rolling bearings at the same time.

10.3 Maintenance interval of the N-EUPEX add-on coupling

The torsional backlash between the two coupling parts must be checked after three months, then at least once a year.

If an increased coupling backlash does not impair the operation of the coupling, the flexible elements (12) can continue to be used up to a specified wear limit before being replaced. To assess wear, the permitted circumferential backlash, converted to the chord dimension ΔS_V on the outer coupling diameter, is shown in table 10.3. To obtain the dimension ΔS_V, one coupling part is rotated without torque as far as the stop and a mark applied to both side (see Fig. 10.3). If the coupling part is rotated in the opposite direction of rotation as far as the stop, the marks move apart. The distance between the marks is the chord dimension ΔS_V. If the dimension ΔS_V exceeds the value in table 10.3, the flexible elements (12) must be replaced.

Caution! **The flexible elements must be replaced in sets.**
Only identically marked flexible elements must be used.

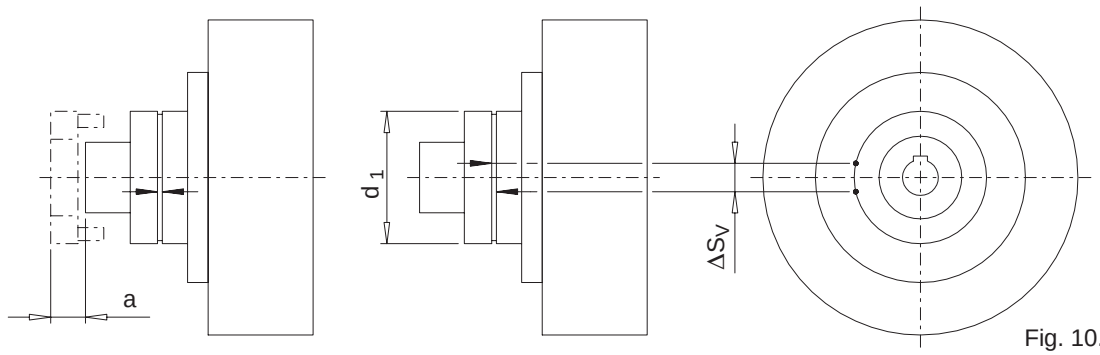

Fig. 10.3

FLUDEX Size	222	297	342	395	450	516	590
N-EUPEX Size [d_1]	**110**	**125**	**140**	**225**	**250**	**315**	**315**
Wear mark ΔS_V [mm]	7.0	8.0	8.0	9.0	10.0	10.5	10.5
Replacement dimension a [mm]	13	11	16	9	11	–	–

Table 10.3: Wear mark

If the above specified maintenance instructions are not adhered to, a correct operation within the meaning of the explosion prevention requirements and Guideline 94/9/EC can no longer be guaranteed.
Use in potentially explosive areas is then not permitted.

10.4 Replacement of the flexible elements

Only **original N-EUPEX flexible elements** must be used for replacement to guarantee troublefree torque transmission and faultfree operation.

On the FAD design replacement of the flexible elements (12) is possible without moving the coupled machines, if the replacement dimension ”a” (see table 10.3 and figure 10.3) is allowed for. After the screw connection part 2/3 is released, part 3 is shifted axially and turned towards part 2. The flexible elements (12) are now freely accessible.

On the FADS design the flexible elements (12) can be demounted after the adaptor (6) and the cam part (7) has been removed.

For re-assembly, the instructions in section 6, ”Assembly”, and section 7, ”Start-up”, must be carefully observed.

10.5 Demounting the FLUDEX coupling

For part designations, see section 11.

Risk of burns after switching off!
Allow FLUDEX coupling to cool down sufficiently before beginning work!

10.5.1 Demounting sizes 222-342

After moving the motor away the retaining screw (141) and locking plate (140) are first removed and then the locking ring (124) demounted. When pulling off the FLUDEX coupling, care must be taken that pulling-off forces are conducted only through the steel hollow shaft (106).

The coupling is best pulled off with the aid of a special pulling-off device as shown in Figure 10.5.1a. The spindle with the pulling-off nut is inserted so that the collar (D) of the pulling-off nut is located behind the recess for the locking ring (124) (Fig. 10.5.1b). To prevent the spindle seizing, the pressure surface and the thread must be treated with a lubricant (e.g. Molykote).

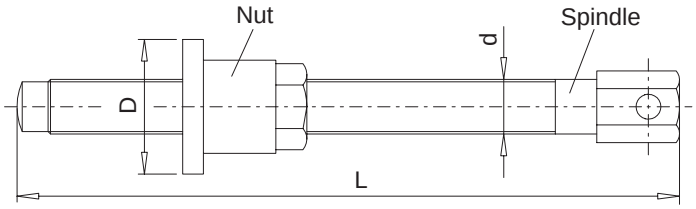

Fig. 10.5.1a

Size		222	297	342
Spindle thread G		G 1/4	G 1/2	G 3/4
Nut collar D $_{h8}$ [mm]		30	45	55
Spindle length L [mm]	FAO, FAK, FAKB, FAD, FADB, FAE, FAM, FADS	200	305	280
	FAR	200	305	420

Table 10.5.1: Dimensions of the threaded spindle and pulling-off nut, sizes 222-342

The locking ring (124) is refitted and the spindle turned forward as far as the shaft stub end face and into the safety countersink in the centring thread. Care must be taken that the nut collar rests evenly against the locking ring.
To prevent flexing and canting, the spindle should be supported as shown.

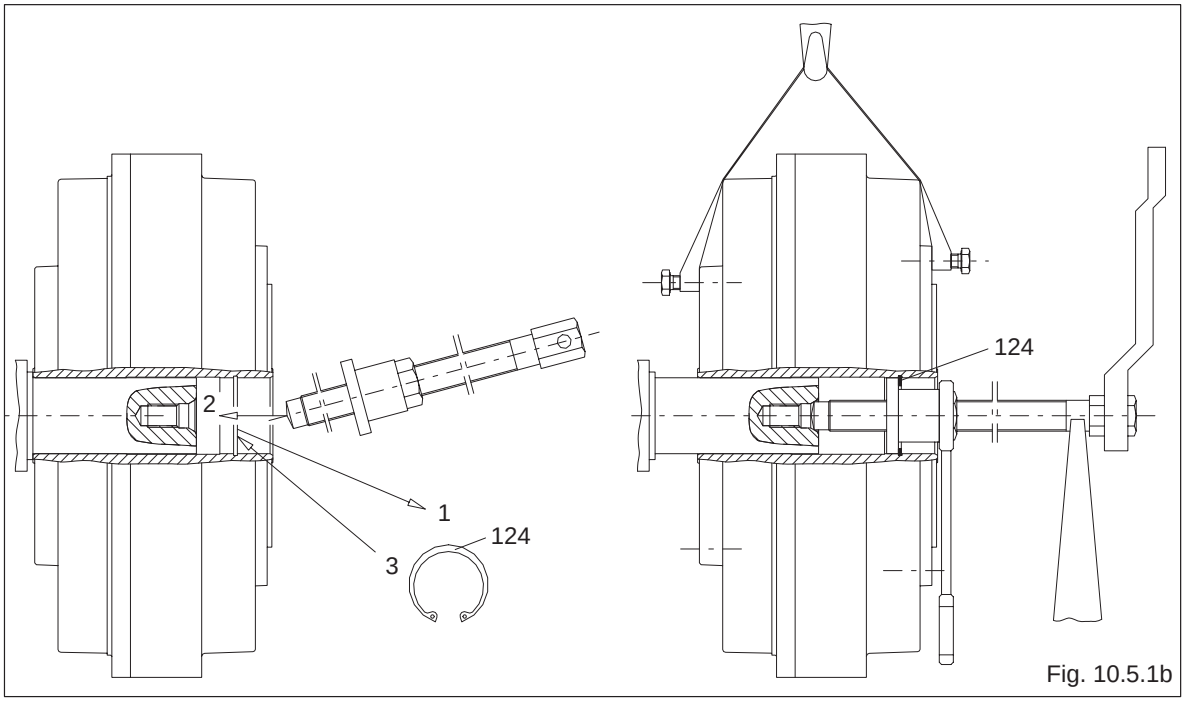

Fig. 10.5.1b

The coupling is pulled off the shaft stub by turning the spindle further into the forcing-off thread and bracing the nut. It is recommended that a hydraulic spindle be used, depending on the size of the coupling.

10.5.2 Demounting sizes 395-590

After moving the motor away the retaining screw (141) and locking plate (140) are first removed. When pulling off the FLUDEX coupling, care must be taken that pulling-off forces are conducted only through the steel hollow shaft (106).

The coupling is normally pulled off with the aid of a threaded spindle, as shown in Figure 10.5.2a. The spindle is screwed into the forcing-off thread (dimension G) of the sleeve (143) and turned forward as far as the shaft stub end face and into the protective countersink in the centring thread (Figure 10.5.2b). To prevent the spindle seizing, the pressure surface and the thread must be treated with a lubricant (e.g. Molykote).

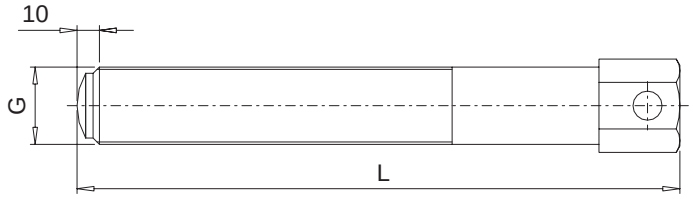

Fig. 10.5.2a

Size		395	450	516	590
Spindle thread G		G 1	G 1	G 1 1/2	G 1 1/2
External cylinder-thread K		M68 x 2	M68 x 2	M100 x 2	M100 x 2
Spindle length L [mm]	FAO, FAK, FAKB, FAD, FADB, FAE, FAM, FADS	280	410	410	410
	FAR	420	590	590	720

Table 10.5.2 Dimensions of the threaded spindle and external cylinder threads, sizes 395-590

To prevent flexing and canting, the spindle should be supported as shown.

The coupling is pulled off the shaft stub by turning the spindle further into the forcing-off thread and bracing the nut. The shaft stub must be fastened to prevent it from rotating.

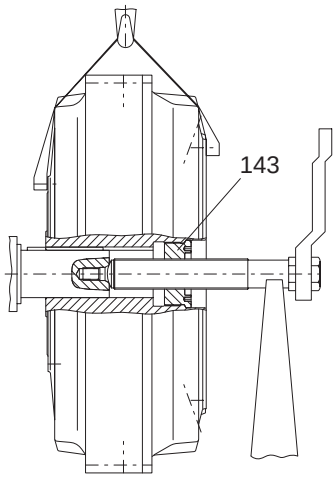

Fig. 10.5.2b

Depending on the size of the coupling, it is recommended that a hydraulic spindle or a hydraulic cylinder be used, as described in the following.

After demounting the threaded bush (143) a hydraulic cylinder with a matching external cylinder-thread K (see table 10.5.2) can be screwed into the free mounting thread of the hollow shaft (106) (figure 10.5.2c).

The coupling can then be pulled off the shaft stub by operating the hydraulic cylinder.

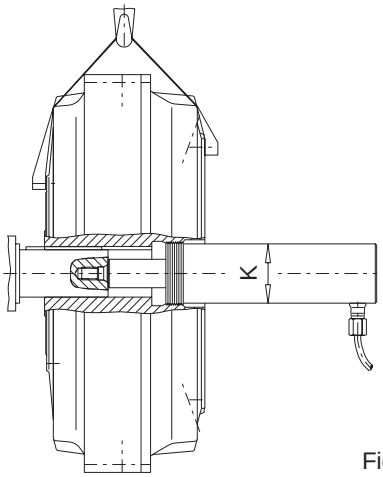

Fig. 10.5.2c

10.6 Demounting the FLUDEX-coupling

For part designations, see section 11.

FLUDEX couplings should as far as possible be repaired at the manufacturer's works.

Before disassembly the housing parts must be marked on the flange in their positions relative to one another.

The housing parts of the coupling, the shell (101) and the cover (102) are joined at the outer flange by screws (130) and nuts (131). For disassembly these screws must first be removed.

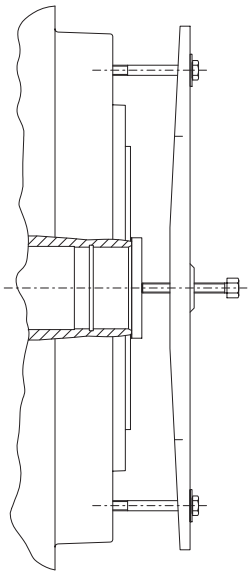

Fig. 10.6

To pull off the shell and cover, a pressure spindle with a bridge and pulling screws must be applied as shown in figure 10.6. The pressure acts on the end face of the steel hollow shaft. The pulling screws are inserted in the flange threads (108) of the shell or cover. After the shell and cover are pulled off, the internal parts (rolling bearings, shaft sealing rings, etc.) will be accessible. The sealing elements should be replaced every time the coupling is disassembled.

10.7 Reassembling the FLUDEX coupling

Reassembly is carried out in the reverse order (note part marking). The O-ring must be lightly greased to assist assembly. The shaft sealing rings (111; 132) are fitted with a grease filling between the dust and sealing lips. Likewise, on the design with an additional Fey laminar ring seal the space between the shaft sealing ring and the plates and the plate mounting groove in the shaft must be filled with grease.

After the old sealing thread has been removed and the sealing surfaces have been cleaned, a fresh sealing thread must be applied to places on the flange which have been sealed with sealing thread. The sealing thread must be placed in a circular form at the place provided on the sealing surface and with the thread ends crossed over. The sealing surface must be undamaged and may be lightly greased for better positioning of the sealing thread.

For tightening torques for screw connections, see section 6, item 6.6.

10.8 Refitting the FLUDEX coupling

For re-assembly, the instructions in section 6, ”Assembly”, and section 7, ”Start-up”, must be carefully observed.

10.9 Filling quantities for FLUDEX FA couplings size 297, 395 and 516

Guide values for VG 22/VG 32 mineral oil

With drive via hollow shaft (106) (inner wheel), valid for $T_{max} = 2.0 \times T_{nom}$

Output	Speed 1/min										
	600	740	890	980	1180	1470	1770	2300	2950	3550	
kW	Oil filling quanitites in litres										
0.55	3.2	2.8									
0.75	3.5	3.0	2.6								
1.1	3.9	3.3	2.9	2.7							
2.2	7.3	4.0	3.4	3.2	2.8						
3.0	7.9	6.8	3.7	3.4	3.0	2.5					
4.0	8.5	7.3	4.0	3.7	3.2	2.7					
5.5	9.4	7.9	6.8	4.1	3.5	2.9	2.6				
7.5	17.0	8.5	7.4	6.9	3.8	3.2	2.8	2.4			
11	18.7	16.0	8.1	7.6	6.6	3.5	3.0	2.5			
15	20.3	17.3	8.9	8.2	7.1	3.8	3.3	2.7			
18	21.4	18.0	15.7	8.6	7.4	4.0	3.4	2.8	2.4		
22		19.0	16.5	15.4	7.8	6.6	3.6	3.0	2.5		
30		20.6	17.8	16.6	8.5	7.2	6.3	3.2	2.7	2.4	
37			18.8	17.5	15.2	7.6	6.6	3.4	2.8	2.5	
45			19.8	18.4	16.0	7.9	6.9	3.6	2.9	2.6	Size 297
55			21.0	19.3	16.8	8.4	7.3	6.0	3.1	2.7	
75				21.1	18.1	15.4	7.9	6.5	5.3	2.9	
90					19.0	16.1	14.1	6.7	5.6	3.0	
110					20.1	16.9	14.8	7.1	5.9		
132						17.7	15.4	7.9	6.2		Size 395
160						18.6	16.2	13.4	6.5		
180						19.2	16.7	13.8	7.0		
200							17.1	14.1			
225							17.6	14.6			
250							18.1	14.9			Size 516
280								15.3			
315								15.8			
350								17.1			

With different operating fluids, drive via the housing or T_{max} not equal to $2 \times T_{nom}$, observe changed filling quantities!

10.10 Filling quantities for FLUDEX FA couplings size 222, 342, 450 and 590

Guide values for VG 22/VG 32 mineral oil

With drive via hollow shaft (106) (inner wheel), valid for $T_{max} = 2.0 \times T_{nom}$

Output	Speed 1/min										
	600	740	890	980	1180	1470	1770	2300	2950	3550	
kW	Oil filling quanitites in litres										
0.55	4.3	1.5	1.4	1.3	1.1						
0.75	4.7	1.65	1.5	1.4	1.2						
1.1	5.1	4.4	1.65	1.6	1.4	1.1					
2.2	6.2	5.2	4.5	4.2	1.6	1.4	1.2				
3.0	9.5	5.6	4.9	4.6	1.65	1.5	1.3	1.0			
4.0	10.2	6.1	5.3	4.9	4.3	1.6	1.4	1.1			
5.5	11.0	9.4	5.7	5.3	4.6	1.65	1.5	1.2	1.0		
7.5	12.0	10.2	6.2	5.8	5.0	4.3	1.6	1.3	1.1		
11	13.4	11.2	9.7	6.4	5.5	4.7	4.1	1.5	1.2	1.0	
15	24.8	12.2	10.5	9.8	6.0	5.0	4.4	1.6	1.3	1.1	
18	25.9	12.9	11.0	10.3	6.3	5.3	4.6	3.9	1.4	1.2	Size 222
22	27.3	23.3	11.6	10.8	9.4	5.5	4.8	4.0	1.4	1.25	
30	29.7	25.2	12.7	11.7	10.1	6.0	5.2	4.3	3.7	1.4	
37	31.5	26.5	23.1	12.4	10.7	9.1	5.5	4.5	3.9	1.5	
45		27.9	24.2	22.6	11.2	9.5	5.8	4.7	4.0	3.5	
55		29.5	25.5	23.7	11.9	10.0	8.8	5.0	4.2	3.7	
75			27.6	25.7	22.3	10.8	9.4	5.4	4.5	3.9	
90			29.0	26.9	23.4	11.3	9.8	8.1	4.7	4.1	Size 342
110				28.3	24.5	12.0	10.4	8.6	4.9	4.3	
132				29.7	25.7	21.9	10.8	8.9	7.6	4.5	
160					27.0	22.9	20.0	9.3	7.8		
180					27.8	23.5	20.6	10.0	8.0		
200					28.6	24.2	21.2	10.9	8.2		
225						24.9	21.8	11.5	8.5		Size 450
250						25.6	22.3		9.6		
280						26.3	22.9		9.9		
315						27.1	23.6		10.5		
350							24.2				Size 590
400							26.4				

With different operating fluids, drive via the housing or T_{max} not equal to $2 \times T_{nom}$, observe changed filling quantities!

11. Spare parts, customer-service addresses

By stocking the most important spare and wearing parts on site, you can ensure that the coupling is ready for use at any time.

When ordering spare parts, always state the following:

– Part no. and designation (see item 11.2), and, if necessary, fusing temperature of the fusible safety plug

– Type/size/delivery order number (see section 1, item 1.1)

– Quantity

We guarantee only the original spare parts supplied by us.

Caution! **Please note that spare parts and accessories not supplied by us have not been tested or approved by us. The installation or use of such products may therefore impair essential characteristics of the coupling under certain circumstances and so pose an active or passive hazard. FLENDER will assume no liability or guarantee for damage caused by spare parts and accessories not supplied by FLENDER.**

Please note that certain components often have special production and supply specifications and that we supply you with spare parts which comply fully with the current state of technical development as well as current legislation.

11.1 Spare-part and customer service addresses

When ordering spare parts or requesting the services of our specialist engineers, please apply first to FLENDER AG.

FLENDER Germany

A. FRIEDR. FLENDER AG
46393 Bocholt - Tel.: (0 28 71) 92-0 - Fax: (0 28 71) 92 25 96
E-mail: contact@flender.com • www.flender.com
Shipping address: Alfred - Flender - Strasse 77 - 46395 Bocholt

A. FRIEDR. FLENDER AG - Kupplungswerk Mussum
Industriepark Bocholt - Schlavenhorst 100 - 46395 Bocholt - Tel.: (0 28 71) 92 28 68 - Fax: (0 28 71) 92 25 79
E-mail: couplings@flender.com • www.flender.com

A. FRIEDR. FLENDER AG - Werk Friedrichsfeld
Am Industriepark 2 - 46562 Voerde - Tel.: (0 28 71) 92-0 - Fax: (0 28 71) 92 25 96
E-mail: contact@flender.com • www.flender.com

Winergy AG
Am Industriepark 2 - 46562 Voerde - Tel.: (0 28 71) 924 - Fax: (0 28 71) 92 24 87
E-mail: info@winergy-ag.com • www.winergy-ag.com

A. FRIEDR. FLENDER AG - Getriebewerk Penig
Thierbacher Strasse 24 - 09322 Penig - Tel.: (03 73 81) 60 - Fax: (03 73 81) 8 02 86
E-mail: ute.tappert@flender.com • www.flender.com

FLENDER - TÜBINGEN GMBH
72007 Tübingen - Tel.: (0 70 71) 7 07-0 - Fax: (0 70 71) 70 74 00
E-mail: sales-motox@flender-motox.com • www.flender.com
Shipping address: Bahnhofstrasse 40 - 72072 Tübingen

LOHER GMBH
94095 Ruhstorf - Tel.: (0 85 31) 3 90 - Fax: (0 85 31) 3 94 37
E-mail: info@loher.de • www.loher.de
Shipping address: Hans-Loher-Strasse 32 - 94099 Ruhstorf

FLENDER SERVICE GMBH
44607 Herne - Tel.: (0 23 23) 940-0 - Fax: (0 23 23) 940 333
E-mail: infos@flender-service.com • www.flender-service.com
24h Service Hotline +49 (0) 17 22 81 01 00
Shipping address: Südstrasse 111 - 44625 Herne

A. FRIEDR. FLENDER AG - FLENDER GUSS
Obere Hauptstrasse 228-230 - 09228 Chemnitz / Wittgensdorf - Tel.: (0 37 22) 64 - 0 - Fax: (0 37 22) 94 - 138
E-mail: flender.guss@flender-guss.com • www.flender-guss.de

11.2 Spare parts list Types FAO, FAK, FAD, FAE, FAM, FADB, FADS

When ordering spare parts, please quote the order number of the original delivery. The order number is stamped on the coupling (blade shell) or stated in section 1.

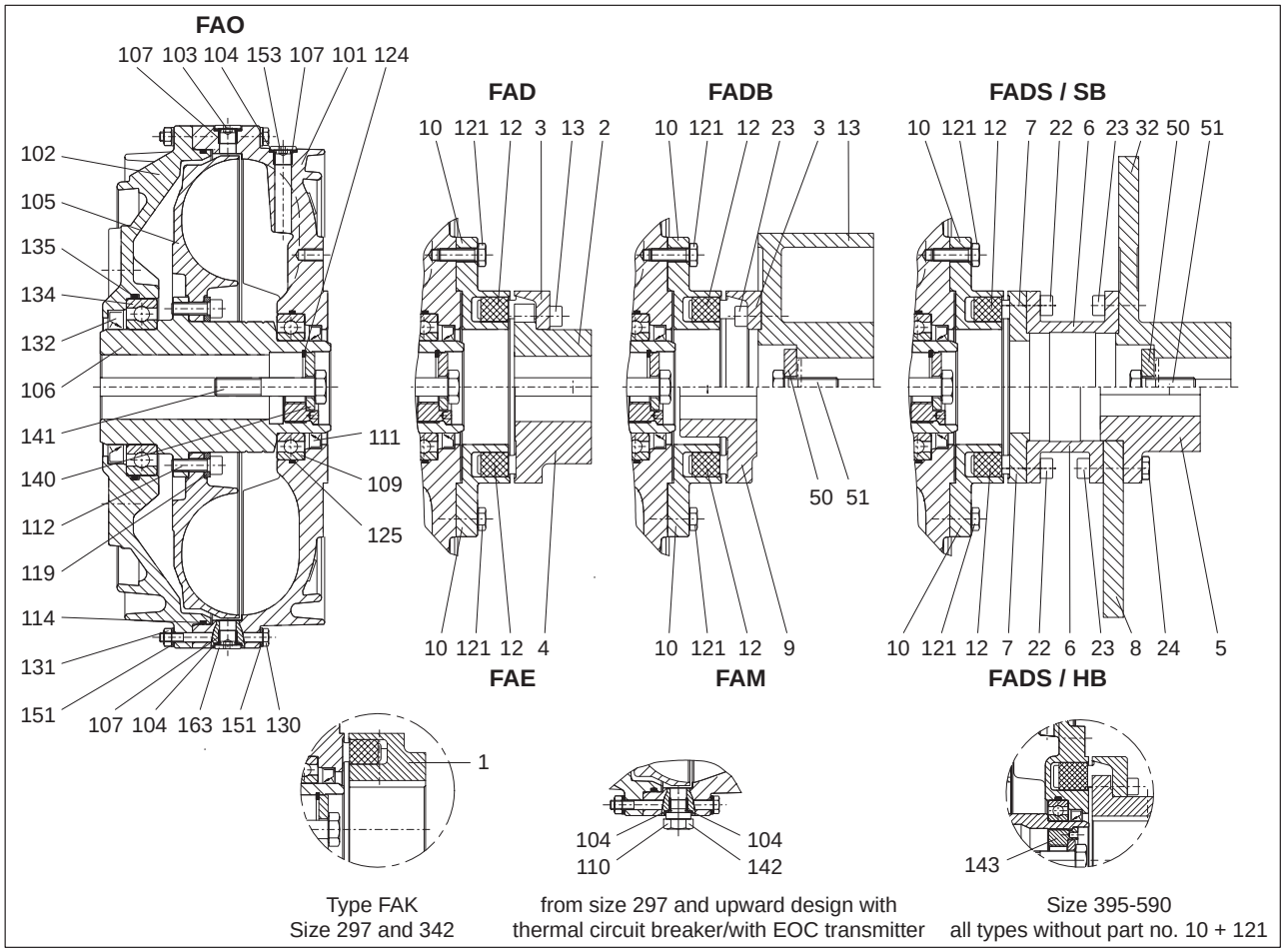

Part no.	Description		Part no.	Description		Part no.	Description	
1	Part 1 (N-EUPEX)		32	Brake disk/drum		119	Retaining ring	E
2	Part 2 (N-EUPEX)		50	Locking plate		121	Hexagon head screw	
3	Part 3 (N-EUPEX)		51	Retaining screw		124	Locking ring	
4	Part 4 (N-EUPEX)					125	O-ring	L
5	Part 5		101	Blade shell	G	130	Hexagon head screw	
6	Part 6 (N-EUPEX)		102	Cover		131	Hexagon nut	
7	Part 7 (N-EUPEX)		103	Fusible safety plug	*	132	Shaft seal	D*
8	Brake disk		104	Sealing ring		134	Anti-friction bearing	L
9	Part 9 (N-EUPEX)		105	Bucket wheel	E**	135	O-ring	L
10	Part 10 (N-EUPEX)		106	Hollow shaft	G**	140	Locking plate	
12	Flexible elements (N-EUPEX)		107	Threaded insert	E	141	Retaining screw	
13	Cheese head screw		109	Anti-friction bearing	L	142	EOC transmitter	
13	Brake drum		110	Thermal circuit-breaker	*	143	Threaded bush	
22	Cheese head screw		111	Shaft seal	D*	151	Washer	
23	Cheese head screw		112	Cheese head screw	E	153	Filling plug	
24	Hexagon head screw		114	O-ring	D*	163	Screw plug	

* When ordering, state fusing temperature of the fusible safety plug (stamped on the screw). The temperature specification serves to determine the sealing material (see also item 5.2).

** Hollow shaft and blade wheel available only as assembled and balanced unit

G = subassembly E = part of a subassembly D = part of the seal set L = part of the bearing set

11.3 Spare parts list, type FAR

When ordering spare parts, please quote the order number of the original delivery. The order number is stamped on the coupling (blade shell) or stated in section 1.

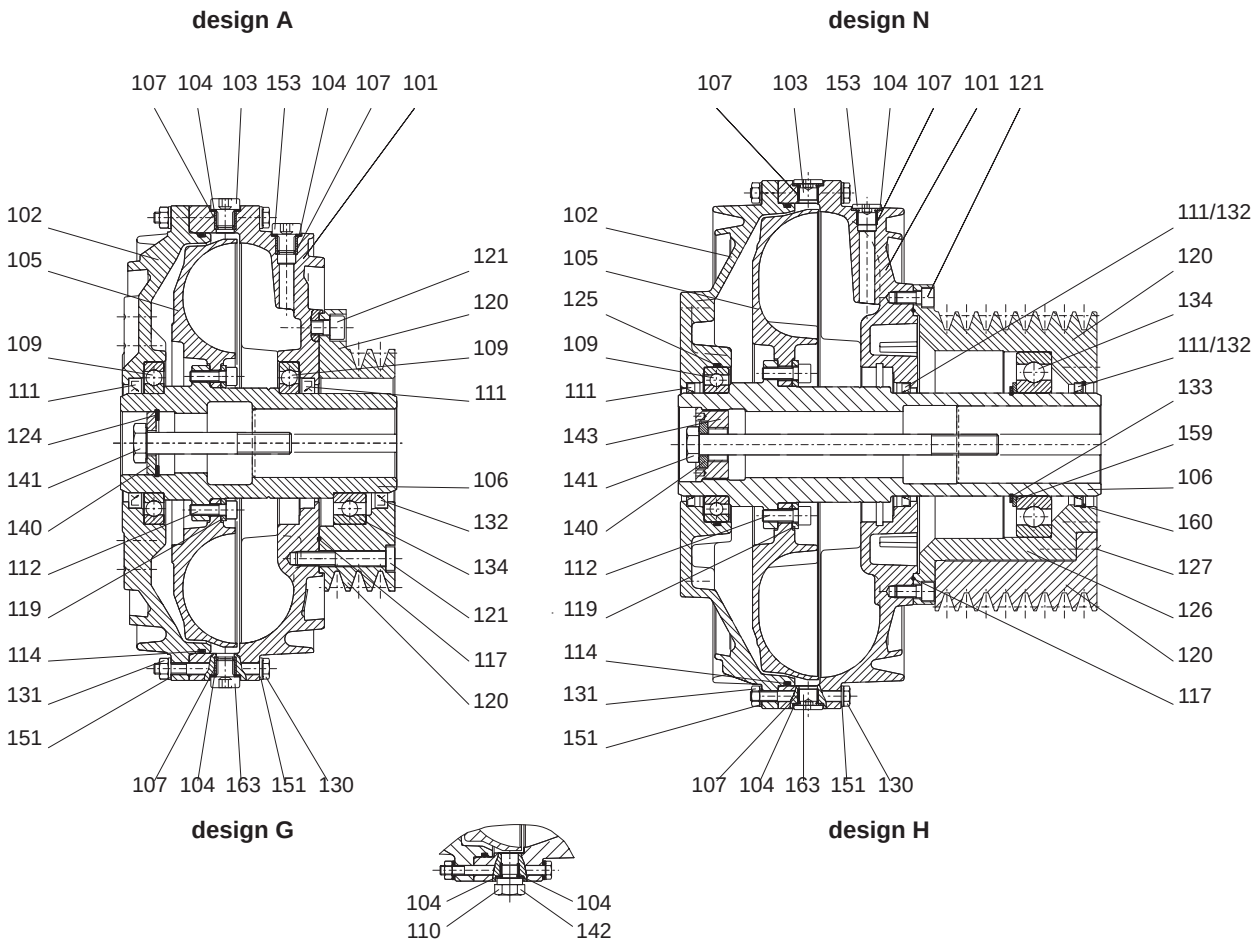

from size 297 and upward design with
thermal circuit breaker/ with EOC transmitter

Part no.	Description		Part no.	Description		Part no.	Description	
101	Blade shell	G	117	Sealing thread	D	133	Locking ring	
102	Cover		119	Retaining ring	E	134	Anti-friction bearing	L
103	Fusible safety plug	*	120	V-belt pulley		140	Locking plate	
104	Sealing ring		121	Cheese head screw		141	Retaining screw	
105	Bucket wheel	E**	124	Locking ring		142	EOC transmitter	
106	Hollow shaft	G**	125	O-ring	L	143	Threaded bush	
107	Threaded insert	E	126	Sleeve flange		151	Washer	
109	Anti-friction bearing	L	127	Cheese head screw		153	Filling plug	
110	Thermal circuit-breaker	*	130	Hexagon head screw		159	Support disk	
111	Shaft seal	D*	131	Hexagon nut		160	Circlip	
112	Cheese head screw	E	132	Shaft seal	D*	163	Screw plug	
114	O-ring	D*						

* When ordering, state fusing temperature of the fusible safety plug (stamped on the screw). The temperature specification serves to determine the sealing material (see also item 5.2).

** Hollow shaft and blade wheel available only as assembled and balanced unit

G = subassembly E = part of a subassembly D = part of the seal set L = part of the bearing set

Germany

A. FRIEDR. FLENDER AG
46393 BOCHOLT - TEL.: (0 28 71) 92 - 0 - FAX: (0 28 71) 92 25 96
SHIPPING ADDRESS: ALFRED - FLENDER - STRASSE 77 - 46395 BOCHOLT

E-mail: contact@flender.com • www.flender.com

VERTRIEBSZENTRUM BOCHOLT
46393 Bocholt
Alfred-Flender-Strasse 77, 46395 Bocholt
Tel.: (0 28 71) 92 - 0
Fax: (0 28 71) 92 - 14 35
E-mail: vz.bocholt@flender.com

VERTRIEBSZENTRUM STUTTGART
70472 Stuttgart
Friolzheimer Strasse 3, 70499 Stuttgart
Tel.: (07 11) 7 80 54 - 51
Fax: (07 11) 7 80 54 - 50
E-mail: vz.stuttgart@flender.com

VERTRIEBSZENTRUM MÜNCHEN
85750 Karlsfeld
Liebigstrasse 14, 85757 Karlsfeld
Tel.: (0 81 31) 90 03 - 0
Fax: (0 81 31) 90 03 - 33
E-mail: vz.muenchen@flender.com

VERTRIEBSZENTRUM BERLIN
Schlossallee 8, 13156 Berlin
Tel.: (0 30) 91 42 50 58
Fax: (0 30) 47 48 79 30
E-mail: vz.berlin@flender.com

12. Declaration by the manufacturer / Declaration of Conformity

Declaration by the manufacturer

in accordance with EC Engineering Guideline 98/37/EC, Appendix II B

We hereby declare that the

FLUDEX Couplings Type
FAO, FAD, FAE, FAM, FADB, FADS, FAK, FAKB and **FAR**
including configuration in accordance with 94/9/EC

described in these Operating Instructions are intended for incorporation in a machine, and that it is prohibited to put them into service before verifying that the machine into which they are incorporated complies with the EC Guidelines (original edition 98/37/EC including any subsequent amendments thereto).

Bocholt, 2004-09-03

Signature (person responible for product)

Declaration of Conformity

within the meaning of EC Guideline 94/9/EC of 23.03.94
and with the legal requirements laid down for its implementation

The manufacturer A. Friedr. Flender AG, D 46393 Bocholt, declares that the

FLUDEX Couplings Type
FAO, FAD, FAE, FAM, FADB, FADS, FAK, FAKB and **FAR**
including configuration in accordance with 94/9/EC

equipment described in these operating instructions is in conformity with Article 1 and Article 8, Par graph 1) b) ii) of Guideline 94/9/EC and complies with the requirements of Guideline 94/9/EC and the standards EN 1127-1 : 1997, DIN EN 13463-1 / -5 / -6 / -8 and BGR 132 : 2003.

The technical documentation has been delivered to the named body

EXAM, BBG Prüf- und Zertifizier GmbH, D 44727 Bochum, Code Number: 0158.

Bocholt, 2004-09-03

Signature (person responible for product)

Signature (Director Engineering)

Signature (Couplings Division)

FLENDER International

(2004-08-01)

E U R O P E

AUSTRIA
Flender Ges.m.b.H.
Industriezentrum Nö-Süd
Strasse 4, Objekt 14, Postfach 132
2355 Wiener Neudorf
Phone: +43 (0) 22 36 6 45 70
Fax: +43 (0) 22 36 6 45 70 10
E-mail: office@flender.at
www.flender.at

BELGIUM & LUXEMBOURG
N.V. Flender Belge S.A.
Cyriel Buyssestraat 130
1800 Vilvoorde
Phone: +32 (0) 2 - 2 53 10 30
Fax: +32 (0) 2 - 2 53 09 66
E-mail: sales@flender.be

BULGARIA
A. Friedr. Flender AG
Branch Office
c/o Auto - Profi GmbH
Alabin Str. 52, 1000 Sofia
Phone: +359 (0) 2 - 9 80 66 06
Fax: +359 (0) 2 - 9 80 33 01
E-mail: flender@auto-profi.com

CROATIA / SLOVENIA
BOSNIA-HERZEGOVINA
A. Friedr. Flender AG
Branch Office
c/o HUM - Naklada d.o.o.
Mandroviceva 3, 10000 Zagreb
Phone: +385 (0) 1 - 2 30 60 25
Fax: +385 (0) 1 - 2 30 60 24
E-mail: flender@hi.hinet.hr

CZECH REPUBLIC
A. Friedr. Flender AG
Branch Office
Hotel DUO, Teplicka 17
19000 Praha 9
Phone: +420 2 - 83 88 23 00
Fax: +420 2 - 83 88 22 05
E-mail: flender_pumprla@hotelduo.cz

DENMARK
Flender Scandinavia A/S
Rugmarken 35 B, 3520 Farum
Phone: +45 - 70 22 60 03
Fax: +45 - 44 99 16 62
E-mail: kontakt@flenderscandinavia.com
www.flenderscandinavia.com

ESTHONIA / LATVIA / LITHUANIA
Flender Branch Office
Addinol Mineralöl Marketing OÜ
Suur-Söjamäe 32
11415 Tallinn / Esthonia
Phone: +372 (0) 6 - 27 99 99
Fax: +372 (0) 6 - 27 99 90
E-mail: flender@addinol.ee
www.addinol.ee

FINLAND
Flender Oy
Ruosilantie 2 B, 00390 Helsinki
Phone: +358 (0) 9 - 4 77 84 10
Fax: +358 (0) 9 - 4 36 14 10
E-mail: webmaster@flender.fi
www.flender.fi

FRANCE
Flender S.a.r.l.
3, rue Jean Monnet - B.P. 5
78996 Elancourt Cedex
Phone: +33 (0) 1 - 30 66 39 00
Fax: +33 (0) 1 - 30 66 35 13
E-mail: sales@flender.fr

SALES OFFICES:
Flender S.a.r.l.
Agence de Lyon
Parc Inopolis, Route de Vourles
69230 Saint Genis Laval
69006 Lyon
Phone: +33 (0) 4 - 72 83 95 20
Fax: +33 (0) 4 - 72 83 95 39
E-mail: sales@flender.fr

Flender - Graffenstaden SA
1, rue du Vieux Moulin
67400 Illkirch-Graffenstaden
B.P. 84
67402 Illkirch - Graffenstaden
Phone: +33 (0) 3 - 88 67 60 00
Fax: +33 (0) 3 - 88 67 06 17
E-mail: flencomm@flender-graff.com

GREECE
Flender Hellas Ltd.
2, Delfon str., 11146 Athens
Phone: +30 210 - 2 91 72 80
Fax: +30 210 - 2 91 71 02
E-mail: flender@otenet.gr

HUNGARY
A. Friedr. Flender AG
Branch Office
Bécsi Út 3-5, 1023 Budapest
Phone: +36 (0) 1 - 3 45 07 90 / 91
Fax: +36 (0) 1 - 3 45 07 92
E-mail: jambor.laszlo@axelero.hu

ITALY
Flender Cigala S.p.A.
Parco Tecnologico Manzoni
Palazzina G
Viale delle industrie, 17
20040 Caponago (MI)
Phone: +39 (0) 02 - 95 96 31
Fax: +39 (0) 02 -95 74 39 30
E-mail: info@flendercigala.it

THE NETHERLANDS
Flender Nederland B.V.
Lage Brink 5-7
7317 BD Apeldoorn
Postbus 1073
7301 BH Apeldoorn
Phone: +31 (0) 55 - 5 27 50 00
Fax: +31 (0) 55 - 5 21 80 11
E-mail: sales@flender.nl
www.flender.nl

Bruinhof B.V.
Boterdiep 37
3077 AW Rotterdam
Postbus 9607
3007 AP Rotterdam
Phone: +31 (0) 10 - 4 97 08 08
Fax: +31 (0) 10 - 4 82 43 50
E-mail: info@bruinhof.nl
www.bruinhof.nl

NORWAY
Please refer to
Flender Scandinavia A/S
Rugmarken 35 B, 3520 Farum
Phone: +45 - 70 22 60 03
Fax: +45 - 44 99 16 62
E-mail: kontakt@flenderscandinavia.com
www.flenderscandinavia.com

POLAND
A. Friedr. Flender AG
Branch Office
Przedstawicielstwo w Polsce
ul. Wyzwolenia 27
43 - 190 Mikolów
Phone: +48 (0) 32 - 2 26 45 61
Fax: +48 (0) 32 - 2 26 45 62
E-mail: flender@pro.onet.pl
www.flender.pl

PORTUGAL
Rodamientos FEYC, S.A
R. Jaime Lopes Dias, 1668 CV
1750 - 124 Lissabon
Phone: +351 (0) 21 - 7 54 24 10
Fax: +351 (0) 21 - 7 54 24 19
E-mail: info@rfportugal.com

ROMANIA
A. Friedr. Flender AG
Branch Office
B-dul Garii Obor Nr. 8D
Sector 2 - Bucuresti
Phone: +40 (0) 21 - 2 53 21 28
Fax: +40 (0) 21 - 2 52 98 60
E-mail: office@flender.ro

RUSSIA
F & F GmbH
Tjuschina 4-6
191119 St. Petersburg
Phone: +7 (0) 8 12 - 3 20 90 34
Fax: +7 (0) 8 12 - 3 40 27 60
E-mail: flendergus@mail.spbnit.ru

SLOVAKIA
A. Friedr. Flender AG
Branch Office
Vajanského 49
P.O. Box 286, 08001 Presov
Phone: +421 (0) 51 - 7 70 32 67
Fax: +421 (0) 51 - 7 70 32 67
E-mail: micenko.flender@nextra.sk

SPAIN
Flender Ibérica S.A.
Poligono Industrial San Marcos
Calle Morse, 31 (Parcela D-15)
28906 Getafe - Madrid
Phone: +34 (0) 91 - 6 83 61 86
Fax: +34 (0) 91 - 6 83 46 50
E-mail: f-iberica@flender.es
www.flender.es

SWEDEN
Flender Scandinavia
Äsenvägen 2
44339 Lerum
Phone: +46 (0) 302 - 1 25 90
Fax: +46 (0) 302 - 1 25 56
E-mail: kontakt@flenderscandinavia.com
www.flenderscandinavia.com

SWITZERLAND
Flender AG
Zeughausstr. 48
5600 Lenzburg
Phone: +41 (0) 62 8 85 76 00
Fax: +41 (0) 62 8 85 76 76
E-mail: info@flender.ch
www.flender.ch

TURKEY
Flender Güc Aktarma Sistemleri
Sanayi ve Ticaret Ltd. Sti.
IMES Sanayi, Sitesi
E Blok 502. Sokak No. 22
81260 Dudullu - Istanbul
Phone: +90 (0) 2 16 - 4 66 51 41
Fax: +90 (0) 2 16 3 64 59 13
E-mail: cuzkan@flendertr.com
www.flendertr.com

UKRAINE
A. Friedr. Flender AG
Branch Office, c/o DIV - Deutsche Industrie-
vertretung, Prospect Pobedy 44
252057 Kiev
Phone: +380 (0) 44 - 4 46 80 49
Fax: +380 (0) 44 - 2 30 29 30
E-mail: flender@div.kiev.ua

UNITED KINGDOM & EIRE
Flender Power Transmission Ltd.
Thornbury Works, Leeds Road
Bradford
West Yorkshire BD3 7EB
Phone: +44 (0) 12 74 65 77 00
Fax: +44 (0) 12 74 66 98 36
E-mail: flenders@flender-power.co.uk
www.flender-power.co.uk

SERBIA-MONTENEGRO
ALBANIA / MACEDONIA
A. Friedr. Flender AG
Branch Office
c/o G.P.Inzenjering d.o.o.
III Bulevar 54 / 19
11070 Novi Beograd
Phone: +381 (0) 11 - 60 44 73
Fax: +381 (0) 11 - 3 11 67 91
E-mail: flender@eunet.yu

A F R I C A

NORTH AFRICAN COUNTRIES
Please refer to Flender s.a.r.l.
3, rue Jean Monnet - B.P. 5
78996 Elancourt Cedex
Phone: +33 (0) 1 - 30 66 39 00
Fax: +33 (0) 1 - 30 66 35 13
E-mail: sales@flender.fr

EGYPT
Sons of Farid Hassanen
81 Matbaa Ahlia Street
Boulac 11221, Cairo
Phone: +20 (0) 2 - 5 75 15 44
Fax: +20 (0) 2 - 5 75 17 02
E-mail: hussein@sonfarid.com

SOUTH AFRICA
Flender Power Transmission (Pty.) Ltd.
Cnr. Furnace St & Quality Rd.
P.O. Box 131, Isando 1600
Johannesburg
Phone: +27 (0) 11 - 5 71 20 00
Fax: +27 (0) 11 - 3 92 24 34
E-mail: sales@flender.co.za
www.flender.co.za

SALES OFFICES:
Flender Power Transmission (Pty.) Ltd.
Unit 3 Marconi Park
9 Marconi Crescent, Montague Gardens
P.O. Box 37291
Chempet 7442, Cape Town
Phone: +27 (0) 21 - 5 51 50 03
Fax: +27 (0) 21 - 5 52 38 24
E-mail: sales@flender.co.za

Flender Power Transmission (Pty.) Ltd.
Unit 3 Goshawk Park
Falcon Industrial Estate
P.O. Box 1608
New Germany 3620, Durban
Phone: +27 (0) 31 - 7 05 38 92
Fax: +27 (0) 31 - 7 05 38 72
E-mail: sales@flender.co.za

Flender Power Transmission (Pty.) Ltd.
9 Industrial Crescent, Ext. 25
P.O. Box 17609, Witbank 1035
Phone: +27 (0) 13 - 6 92 34 38
Fax: +27 (0) 13 - 6 92 34 52
E-mail: sales@flender.co.za

Flender Power Transmission (Pty.) Ltd.
Unit 14 King Fisher Park, Alton
Cnr. Ceramic Curve & Alumina Allee
P.O. Box 101995
Meerensee 3901, Richards Bay
Phone: +27 (0) 35 - 7 51 15 63
Fax: +27 (0) 35 - 7 51 15 64
E-mail: sales@flender.co.za

A M E R I C A

ARGENTINA
Chilicote S.A.
Avda. Julio A. Roca 546
C 1067 ABN Buenos Aires
Phone: +54 (0) 11 - 43 31 66 10
Fax: +54 (0) 11 - 43 31 42 78
E-mail: chilicote@chilicote.com.ar

BRASIL
Flender Brasil Ltda.
Rua Quatorze, 60 - Cidade Industrial
32211 - 970, Contagem - MG
Phone: +55 (0) 31 - 33 69 21 00
Fax: +55 (0) 31 - 33 69 21 66
E-mail: vendas@flenderbrasil.com

SALES OFFICES:
Flender Brasil Ltda.
Rua James Watt, 142
conj. 142 - Brooklin Novo
04576 - 050, São Paulo - SP
Phone: +55 (0) 11 - 55 05 99 33
Fax: +55 (0) 11 - 55 05 30 10
E-mail: flesao@uol.com.br

Flender Brasil Ltda.
Rua Campos Salles, 1095
sala 04 - Centro 14015 - 110,
Ribeirão Preto - SP
Phone: +55 (0) 16 - 6 35 15 90
Fax: +55 (0) 16 - 6 35 11 05
E-mail: flender.ribpreto@uol.com.br

CANADA
Flender Power Transmission Inc.
215 Shields Court, Units 4 - 6
Markham, Ontario L3R 8V2
Phone: +1 (0) 9 05 - 3 05 10 21
Fax: +1 (0) 9 05 - 3 05 10 23
E-mail: info@flenderpti.com
www.flender.ca

CHILE / ARGENTINA / BOLIVIA
ECUADOR / PARAGUAY / URUGUAY
Flender Cono Sur Limitada
Avda. Galvarino Gallardo 1534
Providencia, Santiago
Phone: +56 (0) 2 - 2 35 32 49
Fax: +56 (0) 2 - 2 64 20 25
E-mail: flender@flender.cl
www.flender.cl

COLOMBIA
A.G.P. Representaciones Ltda.
Flender Liaison Office Colombia
Av Boyaca No 23A
50 Bodega UA 7-1, Bogotá
Phone: +57 (0) 1 - 5 70 63 53
Fax: +57 (0) 1 - 5 70 73 35
E-mail: aguerrero@agp.com.co
www.agp.com.co

MEXICO
Flender de Mexico S.A. de C.V.
17, Pte, 713 Centro
72000 Puebla
Phone: +52 (0) 2 22 - 2 37 19 00
Fax: +52 (0) 2 22 - 2 37 11 33
E-mail: szugasti@flendermexico.com
www.flendermexico.com

SALES OFFICES:
Flender de Mexico S.A. de C.V.
Lago Nargis No. 38
Col. Granada,
11520 Mexico, D.F.
Phone: +52 (0) 55 - 52 54 30 37
Fax: +52 (0) 55 - 55 31 69 39
E-mail: info@flendermexico.com

Flender de Mexico S.A. de C.V.
Ave. San Pedro No. 231-5
Col. Miravalle
64660 Monterrey, N.L.
Phone: +52 (0) 81 - 83 63 82 82
Fax: +52 (0) 81 - 83 63 82 83
E-mail: info@flendermexico.com

PERU
Potencia Industrial E.I.R.L.
Calle Gonzales Olaechea
110-URB, La Aurora
Miraflores, Lima
Phone: +51 (0) 1 - 2 42 84 68
Fax: +51 (0) 1 - 2 42 08 62
E-mail:
cesarzam@ potenciaindustrial.com.pe
www.potenciaindustrial.com.pe

USA
Flender Corporation
950 Tollgate Road
P.O. Box 1449, Elgin, IL. 60123
Phone: +1 (0) 8 47 - 9 31 19 90
Fax: +1 (0) 8 47 - 9 31 07 11
E-mail: flender@flenderusa.com
www.flenderusa.com

Flender Corporation
Service Centers West
4234 Foster Ave.
Bakersfield, CA. 93308
Phone: +1 (0) 6 61 - 3 25 44 78
Fax: +1 (0) 6 61 - 3 25 44 70
E-mail: flender1@lightspeed.net

VENEZUELA
F. H. Transmisiones S.A.
Urbanización Buena Vista
Calle Johan Schafer o Segunda Calle
Municipio Sucre, Petare
Caracas
Phone: +58 (0) 2 12 - 21 52 61
Fax: +58 (0) 2 12 - 21 18 38
E-mail: fhtransm@telcel.net.ve
www.fhtransmisiones.com

A S I A

BANGLADESH / SRI LANKA
Please refer to Flender Limited
No. 2 St. George's Gate Road
5th Floor, Hastings
Kolkata - 700 022
Phone: +91 (0) 33 - 2 23 05 45
Fax: +91 (0) 33 - 2 23 18 57
E-mail: flender@flenderindia.com

PEOPLE'S REPUBLIC OF CHINA
Flender Power Transmission
(Tianjin) Co. Ltd.
ShuangHu Rd.- Shuangchen Rd. West
Beichen Economic Development
Area (BEDA)
Tianjin 300400
Phone: +86 (0) 22 - 26 97 20 63
Fax: +86 (0) 22 - 26 97 20 61
E-mail: flender@flendertj.com
www.flendertj.com

Flender Power Transmission
(Tianjin) Co. Ltd.
Beijing Office
C-415, Lufthansa Center
50 Liangmaqiao Road, Chaoyang District
Beijing 100016
Phone: +86 (0) 10 - 64 62 21 51
Fax: +86 (0) 10 - 64 62 21 43
E-mail: beijing@flenderprc.com.cn

Flender Power Transmission
(Tianjin) Co. Ltd.
Shanghai Office
1101-1102 Harbour Ring Plaza
18 Xizang Zhong Rd.
Shanghai 200 001
Phone: +86 (0) 21 - 53 85 31 48
Fax: +86 (0) 21 - 53 85 31 46
E-mail: shanghai@flenderprc.com.cn

Flender Power Transmission
(Tianjin) Co. Ltd.
Wuhan Office
Rm. 1503, Jianyin Building,
709 Jianshedadao
Wuhan 430 015
Phone: +86 (0) 27 - 85 48 67 15
Fax: +86 (0) 27 - 85 48 68 36
E-mail: wuhan@flenderprc.com.cn

Flender Power Transmission
(Tianjin) Co. Ltd.
Guangzhou Office
Rm. 2802, Guangzhou International
Electronics Tower
403 Huanshi Rd. East
Guangzhou 510 095
Phone: +86 (0) 20 - 87 32 60 42
Fax: +86 (0) 20 - 87 32 60 45
E-mail: guangzhou@flenderprc.com.cn

Flender Power Transmission
(Tianjin) Co. Ltd.
Chengdu Office
G-6 / F Guoxin Mansion,
77 Xiyu Street
Chengdu 610 015
Phone: +86 (0) 28 - 86 19 83 72
Fax: +86 (0) 28 - 86 19 88 10
E-mail: chengdu@flenderprc.com.cn

Flender Power Transmission
(Tianjin) Co. Ltd.
Shenyang Office
Rm. 2-163, Tower I, City Plaza Shenyan
206 Nanjing Street (N), Heping District
Shenyang 110 001
Phone: +86 (0) 24 - 23 34 20 48
Fax: +86 (0) 24 - 23 34 20 46
E-mail: shenyang@flenderprc.com.cn

Flender Power Transmission
(Tianjin) Co. Ltd.
Xi'an Office
Rm. 302, Shaanzi Zhong Da
International Mansion
30 Southern Rd.
Xi'an 710 002
Phone: +86 (0) 29 - 7 20 32 68
Fax: +86 (0) 29 - 7 20 32 04
E-mail: xian@flenderprc.com.cn

INDIA
Flender Limited
Head Office:
No. 2 St. George's Gate Road
5th Floor, Hastings
Kolkata - 700 022
Phone: +91 (0) 33 - 22 23 05 45
Fax: +91 (0) 33 - 22 23 08 30
E-mail: flender@flenderindia.com

Flender Limited
Industrial Growth Centre
Rakhajungle, Nimpura
Kharagpur - 721 302
Phone: +91 (0) 3222 - 23 33 07
Fax: +91 (0) 3222 - 23 33 64
E-mail: works@flenderindia.com

SALES OFFICES:
Flender Limited
Eastern Regional Sales Office
No. 2 St. George's Gate Road
5th Floor, Hastings
Kolkata - 700 022
Phone: +91 (0) 33 - 22 23 05 45
Fax: +91 (0) 33 - 22 23 08 30
E-mail: ero@flenderindia.com

Flender Limited
Western Regional Sales Office
Plot No. 23, Sector 19 - C
Vashi, Navi Mumbai - 400 705
Phone: +91 (0) 22 - 27 65 72 27
Fax: +91 (0) 22 - 27 65 72 28
E-mail: wro@flenderindia.com

Flender Limited
Southern Regional Sales Office
41 Nelson Manickam Road
Aminjikarai,
Chennai - 600 029
Phone: +91 (0) 44 - 23 74 39 21
Fax: +91 (0) 44 - 23 74 39 19
E-mail: sro@flenderindia.com

Flender Limited
Northern Regional Sales Office
209-A, Masjid Moth, 2nd Floor
(Behind South Extension II)
New Delhi - 110 049
Phone: +91 (0) 11 - 26 25 02 21
Fax: +91 (0) 11 - 26 25 63 72
E-mail: nro@flenderindia.com

INDONESIA
Flender Singapore Pte. Ltd.
Representative Office
06 - 01 Wisma Presisi
Taman Aries Blok A1 No.1
Jakarta Barat 11620
Phone: +62 (0) 21 - 58 90 20 15
Fax: +62 (0) 21 - 58 90 20 19
E-mail: bobwall@cbn.net.id

IRAN
Cimaghand Co. Ltd.
P.O. Box 15745-493
No. 13, 16th East Street
Beyhaghi Ave., Argentina Sq.
Tehran 15156
Phone: +98 (0) 21 - 8 73 02 14
Fax: +98 (0) 21 - 8 73 39 70
E-mail: info@cimaghand.com

ISRAEL
Greenshpon Engineering Works Ltd.
Bar-Lev Industrial Park
Misgav 20179
Phone: +972 (0) 4 - 9 91 31 81
Fax: +972 (0) 4 - 9 91 34 77
E-mail: sales@greenshpon.com
www.greenshpon.com

JAPAN
Flender Japan Co., Ltd.
WBG Marive East 21F
Nakase 2 - 6
Mihama-ku, Chiba-shi
Chiba 261-7121
Phone: +81 (0) 43 - 2 13 39 30
Fax: +81 (0) 43 - 2 13 39 55
E-mail: contact@flender-japan.com

KAZAKHSTAN
A. Friedr. Flender AG
Branch Office
Abay ave 143, 480009 Almaty
Phone: +7 (0) - 32 72 43 39 54
Fax: +7 (0) - 32 72 77 90 82
E-mail: grabarse@kazgate.de

KOREA
Flender Ltd.
7th Fl. Dorim Bldg.
1823 Bangbae-Dong, Seocho-Ku,
Seoul 137-060
Phone: +82 (0) 2 - 34 78 63 37
Fax: +82 (0) 2 - 34 78 63 45
E-mail: sales@flender-korea.com
www.flender-korea.com

KUWAIT
South Gulf Company
Al-Showaikh Ind. Area
P.O. Box 26229, Safat 13123
Phone: +965 (0) - 4 82 97 15
Fax: +965 (0) - 4 82 97 20
E-mail: adelameen@awalnet.net.sa

LEBANON
Gabriel Acar & Fils s.a.r.l.
Dahr-el-Jamal
Zone Industrielle, Sin-el-Fil
B.P. 80484, Beyrouth
Phone: +961 (0) 1 - 49 82 72
Fax: +961 (0) 1 - 49 49 71
E-mail: gacar@beirut.com

MALAYSIA
Flender Singapore Pte. Ltd.
Representative Office
37 A - 2, Jalan PJU 1/39
Dataran Prima
47301 Petaling Jaya
Selangor Darul Ehsan
Phone: +60 (0) 3 - 78 80 42 63
Fax: +60 (0) 3 - 78 80 42 73
E-mail: flender@tm.net.my

PAKISTAN
Please refer to
A. Friedr. Flender AG
46393 Bocholt
Phone: +49 (0) 28 71 - 92 22 59
Fax: +49 (0) 28 71 - 92 15 16
E-mail: ludger.wittag@flender.com

PHILIPPINES
Flender Singapore Pte. Ltd.
Representative Office
28/F, Unit 2814
The Enterprise Centre
6766 Ayala Avenue corner
Paeso de Roxas, Makati City
Phone: +63 (0) 2 - 8 49 39 93
Fax: +63 (0) 2 - 8 49 39 17
E-mail: roman@flender.com.ph

BAHRAIN / IRAQ / JORDAN / LYBIA
OMAN / QATAR / U.A.E. / YEMEN
Please refer to A. Friedr. Flender AG
Middle East Sales Office
IMES Sanayi Sitesi
E Blok 502, Sokak No. 22
81260 Dudullu - Istanbul
Phone: +90 (0) 2 16 - 4 99 66 23
Fax: +90 (0) 2 16 - 3 64 59 13
E-mail: meso@flendertr.com

SAUDI ARABIA
South Gulf Sands Est.
Bandaria Area, Dohan Bldg., Flat 3/1
P.O. Box 32150
Al-Khobar 31952
Phone: +966 (0) 3 - 8 87 53 32
Fax: +966 (0) 3 - 8 87 53 31
E-mail: adelameen@awalnet.net.sa

SINGAPORE
Flender Singapore Pte. Ltd.
13 A, Tech Park Crescent
Singapore 637843
Phone: +65 (0) - 68 97 94 66
Fax: +65 (0) - 68 97 94 11
E-mail: flender@singnet.com.sg
www.flender.com.sg

SYRIA
Misrabi Co & Trading
Mezzeh Autostrade Transportation
Building 4/A, 5th Floor
P.O. Box 12450, Damascus
Phone: +963 (0) 11 - 6 11 67 94
Fax: +963 (0) 11 - 6 11 09 08
E-mail: ismael.misrabi@gmx.net

TAIWAN
A. Friedr. Flender AG
Taiwan Branch Company
1F, No. 5, Lane 240
Nan Yang Street, Hsichih
Taipei Hsien 221
Phone: +886 (0) 2 - 26 93 24 41
Fax: +886 (0) 2 - 26 94 36 11
E-mail: flender_tw@flender.com.tw

THAILAND
Flender Singapore Pte. Ltd.
Representative Office
23/F M Thai Tower, All Seasons Place
87 Wireless Road, Phatumwan
Bangkok 10330
Phone: +66 (0) 2 - 6 27 91 09
Fax: +66 (0) 2 - 6 27 90 01
E-mail: christian.beckers@flender.th.com

VIETNAM
Flender Singapore Pte. Ltd.
Representative Office
Suite 6/6A, 16F Saigon Tower
29 Le Duan Street, District 1
Ho Chi Minh City, Vietnam
Phone: +84 (0) 8 - 8 23 62 97
Fax: +84 (0) 8 - 8 23 62 88
E-mail: flender_vn@flender.com.vn

A U S T R A L I A

Flender (Australia) Pty. Ltd.
9 Nello Place, P.O. Box 6047
Wetherill Park
N.S.W. 2164, Sydney
Phone: +61 (0) 2 - 97 56 23 22
Fax: +61 (0) 2 - 97 56 48 92, 97 56 14 92
E-mail: sales@flender.com.au
www.flender.com.au

SALES OFFICES:
Flender (Australia) Pty. Ltd.
Suite 3, 261 Centre Rd.
Bentleigh, VIC 3204 Melbourne
Phone: +61 (0) 3 - 95 57 08 11
Fax: +61 (0) 3 - 95 57 08 22
E-mail: sales@flender.com.au

Flender (Australia) Pty. Ltd.
Suite 5, 1407 Logan Rd.
Mt. Gravatt
QLD 4122, Brisbane
Phone: +61 (0) 7 - 34 22 23 89
Fax: +61 (0) 7 - 34 22 24 03
E-mail: sales@flender.com.au

Flender (Australia) Pty. Ltd.
Suite 2 403 Great Eastern Highway
W.A. 6104, Redcliffe - Perth
Phone: +61 (0) 8 - 94 77 41 66
Fax: +61 (0) 8 - 94 77 65 11
E-mail: sales@flender.com.au

NEW ZEALAND
Please refer to Flender (Australia) Pty. Ltd.
9 Nello Place, P.O. Box 6047
Wetherill Park
N.S.W. 2164, Sydney
Phone: +61 (0) 2 - 97 56 23 22
Fax: +61 (0) 2 - 97 56 48 92
E-mail: sales@flender.com.au

FLENDER BOCHOLT	**FLUDEX Ersatzteilzeichnung** Spare parts drawing / Dessin de pièces de rechange / Plano de repuestos / Disegno pezzi di ricambio / Wisselstuktekening / Desenho de pecas de subistituicào / Rysunek czesci zamiennych / Чертеж запчастей	Bauart / Type / Type / Tipo / Tipo / Constructie / Tipo / Typ / Серии	FAK
		Groesse / Size / Taille / Tamàno / Grandezza / Maat / Tamanho / Wielkosz / Размер	342
Bei Korrespondenz bitte angeben / Please quote in correspondence / Pour toute correspondance prière d indiquer / Indiquese en toda correspondencia / Da indicare nella corrispondenza / Bij korrespondentie aangeven / Gentileza indicar em correspondencia / Prosze podawac w korespondencji / При переписке указывать		NO. .	

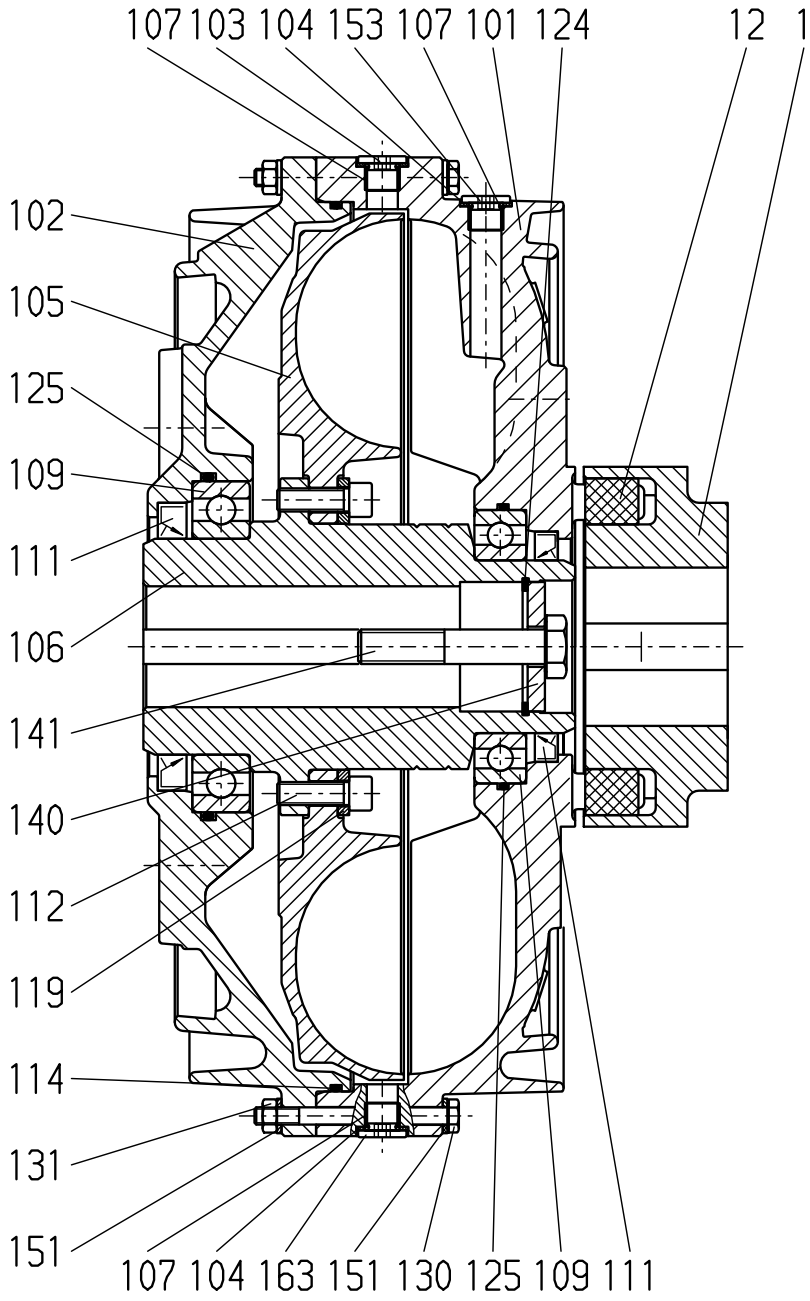

Ausführung / Design / Modèle
Ejecución / Versione / Uitvoering
Execucào / Wykonanie / Исполнение

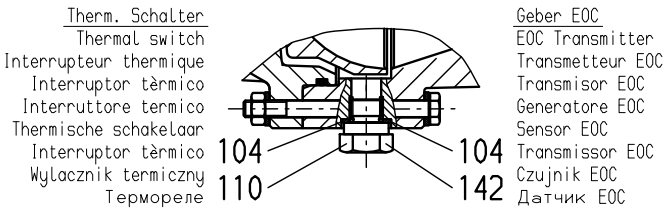

/BO

Diese technische Unterlage hat gesetzlichen Schutz (DIN 34)

E-LISTE FLUDEX FAK 342

A. Friedr. Flender AG, D 46395 Bocholt Tel.+49(0)2871/92-0, Fax+49(0)2871/922596, http://www.flender.com	Datum/ Date 2005-02-09	Name Feldberg	KU
		Z-Nr. **6 079 554** .	V

FLENDER	Stückliste (SL) Parts list	Bauart / Type: FAK Größe / Size: 342,0 Übersetzung / ratio:	Seite / Page 1/2

Bei Korrespondenz bitte angeben
Please quote in correspondence **SL 4190294-240 DE/EN**

Hierzu gehört Zeichnungs-Nr.
Please refer to DWG No. **5298136,6079554,**

	Teil-Nr. Part No.	Menge No. off		Benennung Description		Zeichnungs-Nr. Drawings No.	Material-Nr. Ident no.	Gw(kg) Weight
E	0001	1	ST	TEIL 1 140 050H7 PART 1 140 050H7 EN-JL1040	EN-JL1040	*****	000.000.501.795	3,2
E	0012	6	ST	PAKET 140 BLAU FLEXIBLES 140 BLAU PERBUNAN	PERBUNAN		000.000.390.223	0,1
E	0100	1	ST	FLU FAK342KOMP 55H7 FLUDEX FLUID COUPLING FAK342KOMP 55H7 AL	AL	5240398/-	000.000.652.724	28,5
E*	0101	1	ST	SCHALE 342 FAK SHELL 342 FAK AC43300	AC43300	5241201/F	000.001.219.744	10,5
E**	0107	4	ST	GEW-EIN M18X1,5X13,5 STANDARD THREADED INSERT M18X1,5X13,5 STANDARD	1.4301		000.000.321.027	0,1
E*	0102	1	ST	DECKEL 342 COVER 342 AC43300	AC43300	5240665/F	000.001.219.748	4,8
E*	0105	1	ST	SCHAUFELRAD 342 BLADE WHEEL 342 AC43300	AC43300	5297858/D	000.001.219.749	2,6
E*	0106	1	ST	WELLE-HOHL 342K 55 G6 HOLLOW SHAFT 342K 55 G6 16MnCrS5	16MnCrS5	5298451/B	000.000.653.117	4,9
E**	IW06	1	ST	WELLE 135X0184 342K ROH SHAFT 135X0184 342K ROH 16MnCrS5	16MnCrS5	5298451/B	000.000.275.082	20,7
E*	0109	2	ST	WAELZL 6015 D 625 ROLLING CONTACT BEARING 6015 D 625	MET-KAEF		000.000.380.615	0,7
E*	0111	2	ST	WDR 075X100X11 BABSL SHAFT SEAL 075X100X11 BABSL 72NBR902	72NBR902		000.000.652.141	0,1
E*	0112	8	ST	SCHRB-ZYL M10X030 D 912 HEX.SOCKET HEAD CAP SCREW M10X030 D 912	10.9		000.000.772.934	0,0
E*	0114	1	ST	O-RING OR0340 -04 W 5713 O-RING OR0340 -04 W 5713 NB 70	NB 70		000.000.307.122	0,1
E*	0119	1	ST	RING-HALTE 342 LOCKING RING 342 S355J2G3	S355J2G3	5297873/-	000.000.653.175	0,3
E*	0124	1	ST	RING-SICHER 055X2 D 472 CIRCLIP 055X2 D 472 FED-ST	FED-ST		000.000.343.055	0,1
E*	0125	2	ST	O-RING OR0115 -04 W 5713 O-RING OR0115 -04 W 5713 72NBR872	72NBR872		000.000.307.154	0,1
E*	0130	40	ST	SCHRB-SKT M08X075 D 931 HEXAGON HEAD SCREW M08X075 D 931 8.8-A2C	8.8-A2C		000.000.321.990	0,0
E*	0131	40	ST	MUTTER-SKT M08 D 934 HEXAGON NUT M08 D 934 10-A2C	10-A2C		000.000.340.375	0,1
E*	0151	80	ST	SCHEIBE 08,4 B D 125 DISC 08,4 B D 125 ST-A1C	ST-A1C		000.000.342.011	0,1
E	0103	1	ST	SCHRB-SCHM M18X1,5 160 FUSIBLE SAFETY BOLT M18X1,5 160 5.6-J3A	5.6-J3A	5230001/C	000.000.500.987	0,1
E	0104	3	ST	RING-DICHT 22,0X29,0 A D 7603 SEALING RING 22,0X29,0 A D 7603 AL	AL		000.000.342.252	0,1
E	0140	1	ST	SCHB-END 055/022X14 D END PLATE 055/022X14 D S550GD	S550GD	5230138/-	000.000.652.354	0,2
E	0141	1	ST	SCHRB-SKT M20X090 D 931 HEXAGON HEAD SCREW M20X090 D 931 8.8	8.8		000.000.321.819	0,3

Die mit * gekennzeichneten Teile gehören zu einer Baugruppe (G). Die Baugruppe ist nur komplett auszutauschen.
The parts marked with * belong to a subassembly (G). The subassemblymust be replaced complete.

A. Friedr.Flender AG, D 46393 Bocholt,
Tel.+ 49(0)2871/92-0, Fax+ 49(0)2871/922596, http://www.flender.com

Datum Date	EBBERT, FRANZ	2746
08.05.2006	Rev.:	

FLENDER	Stückliste (SL) Parts list	Bauart / Type: FAK Größe / Size: 342,0 Übersetzung / ratio:	Seite / Page: 2/2

Bei Korrespondenz bitte angeben
Please quote in correspondence **SL 4190294-240 DE/EN**

Hierzu gehört Zeichnungs-Nr.
Please refer to DWG No. **5298136,6079554,**

	Teil-Nr. Part No.	Menge No. off		Benennung Description		Zeichnungs-Nr. Drawings No.	Material-Nr. Ident no.	Gw(kg) Weight
E	0142	1	ST	GEBER-ALU EOC GEF 27 ALU SENSOR EOC GEF 27 AL/FE	AL/FE	5256625/-	000.000.652.781	0,1
E	0153	2	ST	SHR-VSHL M18X1,5 PLUG SCREW M18X1,5 5.8-A3C	5.8-A3C	5240691/B	000.000.275.134	0,0
E	0203	1	ST	SCHRB-SCHM M18X1,5 160 FUSIBLE SAFETY BOLT M18X1,5 160 5.6-J3A	5.6-J3A	5230001/C	000.000.500.987	0,1
E	0204	3	ST	RING-DICHT 22,0X29,0 A D 7603 AL SEALING RING 22,0X29,0 A D 7603 AL			000.000.342.252	0,1

A. Friedr.Flender AG, D 46393 Bocholt,
Tel.+ 49(0)2871/92-0, Fax+ 49(0)2871/922596, http://www.flender.com

Datum Date	EBBERT, FRANZ	2746
08.05.2006	Rev.:	

Operating Instructions

BA 4600.1 EN 07.05

FLUDEX-EOC system

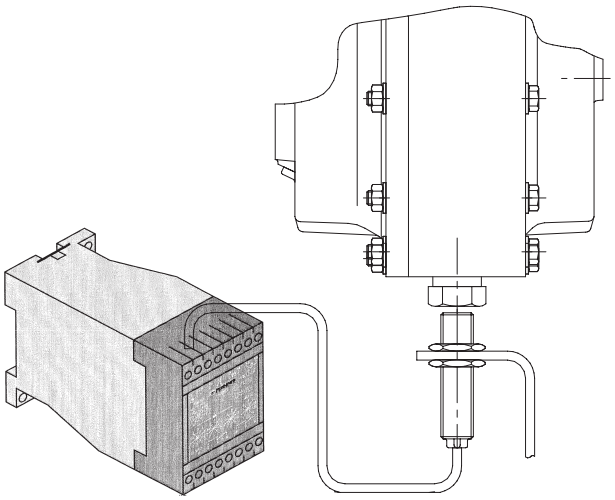

FLENDER

A. Friedr. Flender AG · 46393 Bocholt · Tel. 02871/92-0 · Telefax 02871/92-2596 · www.flender.com

Contents

1.	**Application**	**3**
2.	**Operation**	**3**
3.	**Fitting**	**4**
3.1	Fitting transmitter	4
4.	**Component description**	**5**
4.1	Transmitter	5
4.1.1	Technical data	5
4.2	Pick-up	5
4.2.1	Technical data	5
4.2.2	Connection	5
4.3	Connection, operation and setting of the evaluating instrument (speed monitor)	6
4.3.1	Terminal assignment	6
4.3.2	LED display function and function setting	7
4.3.2.1	LED display function	7
4.3.2.2	Function setting	8
4.3.3	Setting examples - Limit value	8
4.3.4	Technical data speed monitoring device	9
5.	**Use in potentially explosive environments**	**10**
5.1	Isolation amplifier	10
5.1.1	Connection values	10
5.1.2	Technical data isolating switch amplifier	11

Caution! **Installation and start-up must be carried out by properly trained specialist personnel. Please read these operating instructions carefully before starting up. We accept no liability for personal injury or damage due to incorrect handling.**

The EOC complete system must not be used in potentially explosive environments as defined in Guideline 94/9/EC!

1. Application

The ”**E**lectronic **O**perating **C**ontrol” **(EOC)** system monitors the required operating condition of the FLUDEX coupling contactlessly and requires no maintenance. Spraying and loss of operating fluid if the coupling overheats and the pollution of the environment associated with it can be avoided. In the case of internal-gear drives the output speed (minimum value), in addition to the temperature, can be monitored. In this case the EOC system cuts out immediately the output speed falls below its required value or the drive stops even before the coupling overheats. The EOC system can be used on coupling sizes 297 and upward at peripheral speeds > 15 m/s. The transmitter is fitted to the coupling in place of the screw plug (163).

2. Operation

While the coupling is rotating and below the response temperature of 125 °C, each time the pick-up is passed the transmitter emits an impulse signal which is transmitted to the evaluating instrument. The pulse number is compared in the evaluating instrument with the required value set on the front plate and, when the pulse number is fallen below, causes the output relay to cut out.

If as a result of an operating fault the response temperature (oil temperature) exceeds the actuating temperature of 125 °C, the transmitter stops emitting pulses and the output relay of the evaluating instrument drops out. The output relay can trigger a fault signal or trip the drive cut-out.

The evaluating instrument has a time delay which prevents a fault signal during the drive starting phase.

If the monitoring system has cut out, the operating fault must first be rectified. The transmitter must not be exchanged. After it has cooled down to below the actuating temperature, the coupling is once more ready to operate. Depending on the starting heating to be expected (moment of inertia of the drive unit), however, the drive should be switched on only at coupling temperatures under 90 °C.

Caution! **If the coupling is started up again without cooling down, as would be possible because of the time delay, the coupling may further heat up (starting heating), and there is a risk that the fusible safety plug will operate.**

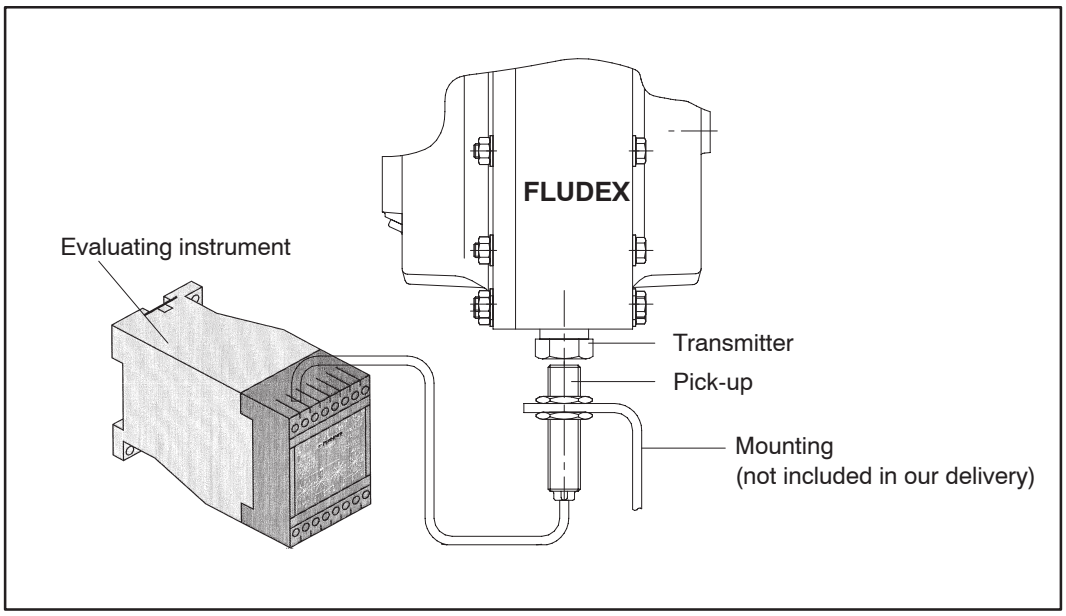

3. Fitting

The EOC system comprises the transmitter, the pick-up and the evaluating instrument. The transmitter is fitted to the coupling housing in place of the screw plug (163). The fusible safety plug (160 °C) remains in the coupling as an emergency safety device. The pick-up is positioned flush with the turning circle of the transmitter (see item 3.1), so that there is a gap of 2 mm between the end faces of the transmitter and the pick-up. The pick-up must be mounted vibrationfree on a firm bracket or part of the bell-housing. Flush-fitting in metal parts is also possible.

The evaluating instrument must preferably be installed in a switch cabinet of the control system provided.

3.1 Fitting transmitter

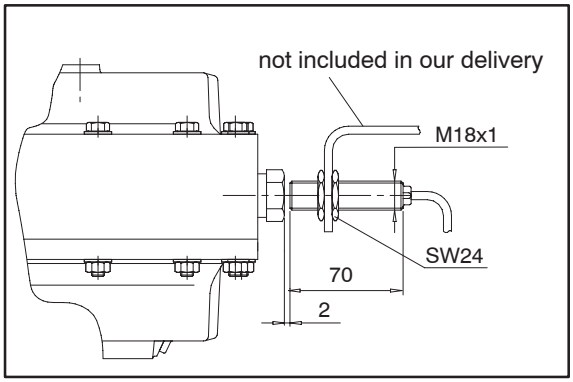

Retrofitting of the EOC system in already installed FLUDEX couplings is possible without reworking in the case of sizes 297-755.

4. Component description

4.1 Transmitter

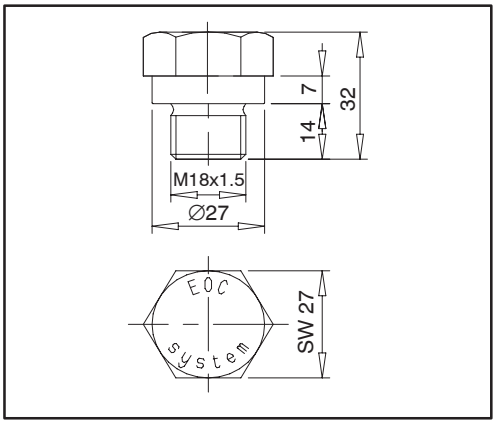

The transmitter comprises an AL bearer screw with an in-built magnet /system which changes its field strength according to the temperature. The magnet system is designed so that at a pick-up distance of 2 mm a cut-out temperature of 125 °C results. If the gap between the pick-up and the transmitter is greater, the EOC system switches at lower temperatures.

4.1.1 Technical data

Type designation	GEF 27
Type	M18x1.5

4.2 Pick-up

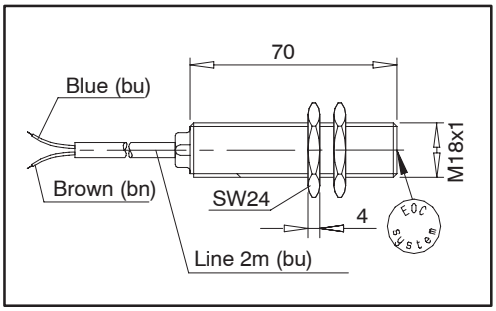

The pick-up records the magnetic field of the transmitter each time it is passed and, if there is sufficient field strength, sends a square-wave signal to the evaluating instrument. Below a fixed field-strength threshold (temperature switching point) no signal is sent.

4.2.1 Technical data

Type designation	BIM-G18-Y1/S926
Output signal	to EN 60947-5-6 (NAMUR)
Type	MS threaded tube chromed M18 x 1 x 70mm
Type of fitting	flush / not flush
Type of protection	IP67
Operating temperature	–25 °C to +70 °C
Approval for use in explosion-hazard areas according to Certificate of Conformity	KEMA 03 ATEX 1122 X

4.2.2 Connection

The connection between the pick-up and the evaluating instrument is established via a two-core conductor. The max. length of conductor with a conductor cross-sectional area of 1.0 mm^2 is 500 m. The feed line must always be laid separately and not with others in multi-core conductors (risk of coupling-in interfering voltages).

4.3 Connection, operation and setting of the evaluating instrument (speed monitor)

4.3.1 Terminal assignment

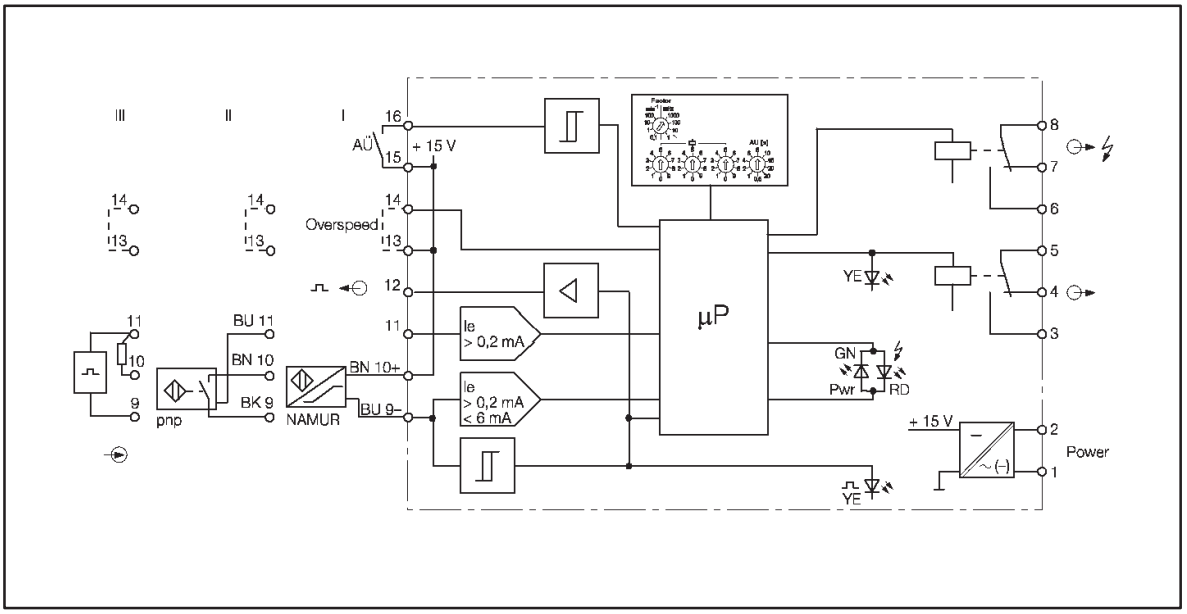

1 - 2 Operating voltage connection

3 - 5 Limit relay output

6 - 8 Fault signal relay, is de-energised in the event of a fault (wire breakage or short circuit)

9 - 11 Sensor connection in accordance with block diagram (III: $R_{10\text{-}11}$ = 1...10kΩ)
9 bu, 10 bn Pick-up connection EOC system

12 Continuous switching output for further transmission of the sensor switching condition

13 - 14 Programming the speed monitoring system:

- Open bridge:
  Monitoring for too low speed (EOC system), limit relay de-energised in the event of too low speed (excessive temperature of coupling).
- Closed bridge:
  Monitoring for too high speed, limit relay de-energised in the event of too high speed (do not use function with EOC system!)

15 - 16 Delayed timing (only with monitoring for too low speed):

- If the operating voltage is switched on with the bridge closed or the bridge closed with the operating voltage on, the limit relay will be forcibly energised for the period of time set on the AU rotary switch and the ”Speed too low” signal blocked in the starting phase.
- Dynamic transmitter-circuit monitoring:
  If during the monitoring for excessive speed and with the bridge closed no pulses are emitted for the time set on the AU rotary switch, the two output relays are de-energised.

4.3.2 LED display function and function setting

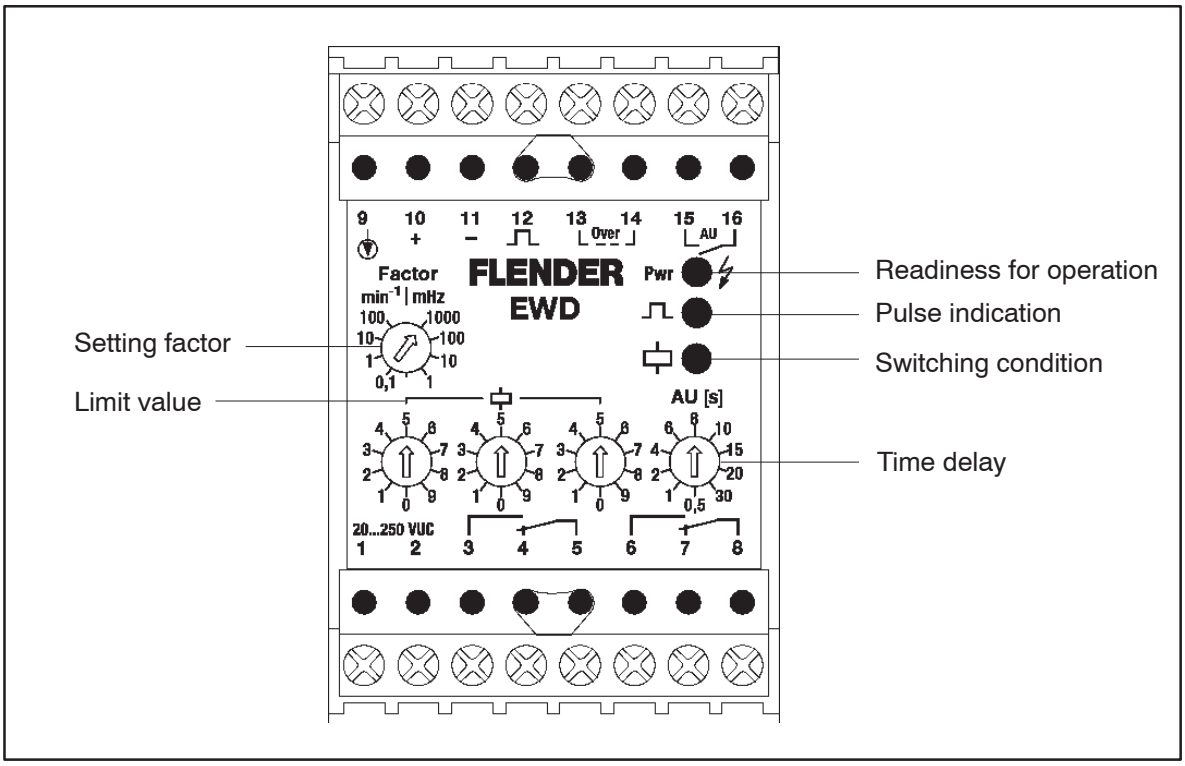

4.3.2.1 LED display function

Readiness for operation Pwr

green:	Device is ready to use
rot:	Invalid switch setting, or in the case of NAMUR sensors wire breakage or short circuit, relay de-energised.

Pulse indication

yellow:	pnp switch closed NAMUR sensor or EOC pick-up not loaded.

Fault diagnosis in the case of NAMUR sensors:

yellow:	Wire breakage in sensor conductor
dark:	Short circuit of sensor conductor

Switching condition

yellow:	Limit relay energised (no excessive temperature on the coupling)

4.3.2.2 Function setting

Time delay AU [s]

Delay time:
If the value is ”too low”, the time in which the limit relay remains forcibly energised after activation of the time delay is set in seconds on the rotary switch.
Dynamic transmitter-circuit monitoring:
If the value is ”too high”, the time within which pulses must be received from the sensor is set in seconds on the rotary switch, otherwise both output relays are de-energised.

Setting factor (see item 4.3.2)

The rotary switch is used to set the multiplication factor and the unit of limit value (min^{-1} or mHz).

Limit value

The rotary switch is used to fix the limit value, multiplied by the setting factor.
(see Setting examples limit value, item 4.3.3)

4.3.3 Setting examples - Limit value

a) The three highest-value places of the limit value are set. The value 1000 is set with the 000 positions.

b) If necessary, a more precise setting of the limit value is possible by converting from min^{-1} <=> mHz.

c) In the case of limit values below 0.1 min^{-1} conversion (x16.67) to MHz must be carried out and this value set.

d) In the case of limit values above 1000 Hz conversion (x60) to min^{-1} must be carried out and this value set.

Example	Limit value	Setting factor	Multiplier (Limit value)
a	5.7 Hz	100 mHz	0 5 7
a	1540 min^{-1}	10 min^{-1}	1 5 4
b	1776 min^{-1}	10 min^{-1}	1 7 7
	more precisely:	100 mHz	2 9 6
c	0.06 min^{-1}	1 mHz	0 0 1
d	1200 Hz	100 min^{-1}	7 2 0

Caution!

Care must be taken that the rotary switches lock in the desired positions!

When monitoring the FLUDEX coupling for excessive temperature (normal operation) the evaluating instrument must be set to approx. 2/3 of the motor speed; otherwise, e.g. in the case of internal gear drives, the corresponding required value must be set.

The delay time must be set so as to be at least as long as the acceleration time!

The evaluating instrument has not been preset at the factory!

4.3.4 Technical data speed monitoring device

Type designation	EWD/20...250VUC
Operating voltage	20...250VAC/DC
Net frequency	40...70Hz
Power requirement	≥ 4.5VA
Monitoring range	0,01Hz ... 1660 Hz or 0.6 ... 100 000 min^{-1}
Input frequency	≤ 150 000 min^{-1}
Pulse time	≥ 0.2 ms
Pulse pause	≥ 0.2 ms
Hysteresis	approx. 10%
Delayed timing/start monitoring	0.5 ... 30 s (in 10 steps)
Reproducibility	≤ 0.1 %
Temperature drift	≤ 0.005 %/K
Air and surface leakage paths	
Input circuit to output circuit	≥ 4 mm
Input circuit to supply	≥ 4 mm (for 230 VAC)
Test voltage	2 kV (for 24 VDC 500 V)
Input circuits	NAMUR/three-wire, pulse-switching
NAMUR input terminal: 9/10	to EN 60947-5-6 (NAMUR)
Working values	U_0 = 8.2 V; I_k = 8.2 mA
Switching threshold	1.4 mA ≤ I_e ≤ 1.8 mA
Switching threshold	≤ 0.15 mA
Short circuit threshold	≥ 6 mA
Three-wire input	pulse-switching, terminals 9 ... 11
Working values	U ≤ 15 V; I ≤ 30 mA
0-signal	0 ... 5 VDC
1-signal	10 ... 30 VDC
Output circuit	two relay outputs and continuous-switching output
Relay output/fault signal output	1 changeover switch each
Switching voltage	≤ 250 V
Switching current	≤ 2 A
Switching power	≤ 500 VA/60 W
Contact material	AgCdO + 3 μ Au
Continuous-switching output	14 V/10 mA, (terminals 11/12) short-circuit-proof
Mounting housing	WxHxD: 50x75x110 mm, polycarbonat/ABS
Fixing	Floor mounting or snap-on fixture to top hat rail (DIN 50 022)
Connection	2 x 8 screw terminals
Terminal cross-section	≤ 2 x 2.5 mm^2 or 2 x 1.5 mm^2 with multi-core cable ends
Type of protection (IEC60529/EN60529)	IP 20
Operating temperature range	– 25 ... + 60 °C

5. Use in potentially explosive environments

When using the EOC system in a potentially explosive environment, an isolation amplifier must be connected in series with the EWD/20...250VUC speed monitor (see item 5.1.1). Here only the pick-up current circuit is designed to be intrinsically safe (EEx-i). The isolation amplifier and speed monitor must not be located in the potentially explosive area.

If an isolation amplifier is used for the ”potentially explosive environment”, only the wire-breakage identification must be active for the power supply lines. Wire breakage and short circuit on the output conductor of the pick-up are not signalled via the fault signal relay but via the output relay through too low speed.

5.1 Isolation amplifier

5.1.1 Connection values

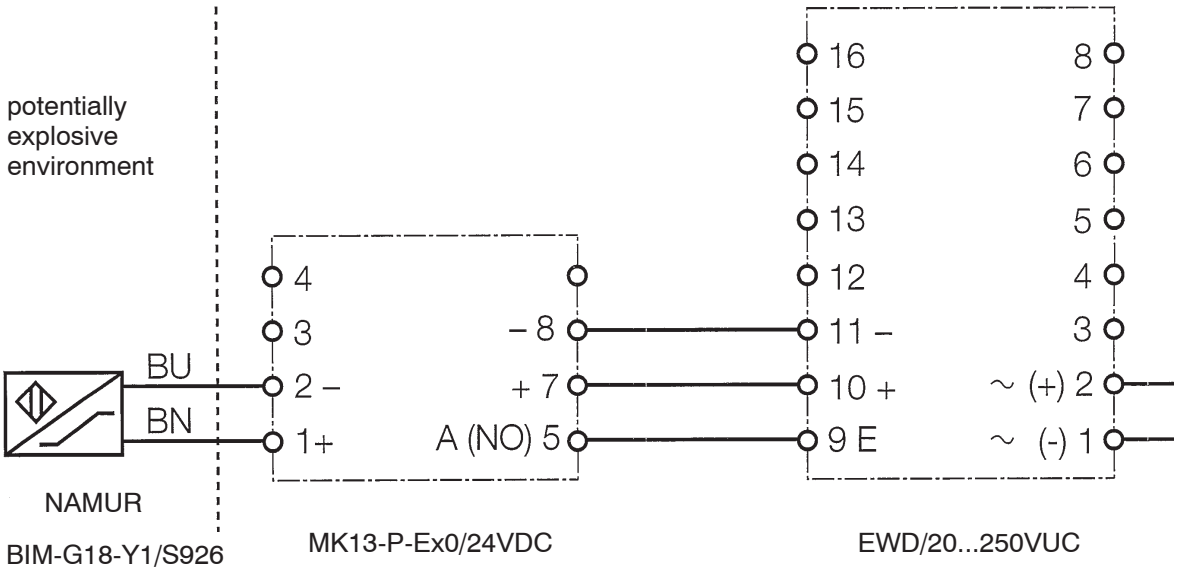

Caution! **The EOC complete system must not be used in potentially explosive environments as defined in Guideline 94/9/EC!**

5.1.2 Technical data isolating switch amplifier

Type designation	MK13-P-Ex0/24VDC
Operating voltage U_B	10...30VDC
Residual ripple W_{ss}	≤ 10%
Current requirement	approx. 20mA
Electrical isolation	Input circuit to output circuit and supply voltage for $250V_{eff}$, test voltage $2.5kV_{eff}$
Input circuit	to EN 60947-5-6 (NAMUR)
Working values	
Working voltage	8.2 V
Current	8.2 mA
Switching threshold	1.55 mA
Hysteresis	typically 0.4 mA
Wire breakage threshold	≤ 0.1 mA
Short circuit threshold	≥ 6 mA
Output circuit	two transistor outputs
Drop in voltage	≤ 2.5 V
Switching current per output	≤ 100 mA, short-circuit-proof, pulse-switching
Switching frequency	≤ 3 kHz
Approval for use in potentially explosive areas according to Certificate of Conformity	TÜV 03 ATEX 2235
Maximum values	
No-load voltage U_0	≤ 9.9 V
Short circuit current I_k	≤ 12 mA
Power P_0	≤ 30 mW
Max. external inductances/capacitances	
[EEx ia] IIB	2/10/20 mH/5/3.6/3.2 µF
[EEx ia] IIC	1/5/10mH/1.1/0.79/0.7 µF
Device identification	II (1) GD [EEx ia] IIC
LED-Anzeigen	
Readiness for operation	green
Switching condition/fault signal	yellow/red (two-colour LED)
Mounting housing	WxHxD: 18x89x70 mm, polycarbonat/ABS
Fixing	Floor mounting or snap-on fixture to top hat rail (DIN 50 022)
Type of protection	IP20
Terminal cross-section	≤ 2 x 2.5 mm^2 or 2 x 1.5 mm^2 with multi-core cable ends
Operating temperature	– 25...+ 70 °C

FLENDER	**Stückliste (SL)** Parts list	**Bauart** **EOC** Type **Größe** **115,0** Size **Übersetzung** ratio	**Seite** Page 1/1

Bei Korrespondenz bitte angeben
Please quote in correspondence **SL 4190294-260 DE/EN**

Hierzu gehört Zeichnungs-Nr.
Please refer to DWG No.

	Teil-Nr. Part No.	Menge No. off		Benennung Description	Zeichnungs-Nr. Drawings No.	Material-Nr. Ident no.	Gw(kg) Weight
E	0010	1	ST	WAECHT-DREHZ EWD/20...250VUC SPEED MONITOR EWD/20...250VUC		000.001.205.294	0,1
E	0020	1	ST	SIGNALEMPFAENGER BIM-G18-Y1/S. EOC SIGNAL-RECEIVER BIM-G18-Y1/S. EOC		000.000.361.460	0,1

Die mit * gekennzeichneten Teile gehören zu einer Baugruppe (G). Die Baugruppe ist nur komplett auszutauschen.
The parts marked with * belong to a subassembly (G). The subassemblymust be replaced complete.

A. Friedr.Flender AG, D 46393 Bocholt,
Tel.+ 49(0)2871/92-0, Fax+ 49(0)2871/922596, http://www.flender.com

Datum Date **05.05.2006**
Rev.:

Operating Instructions

BA 3000 EN 02.97

Centrifugal brakes of type **FB**
sizes 180 and 208

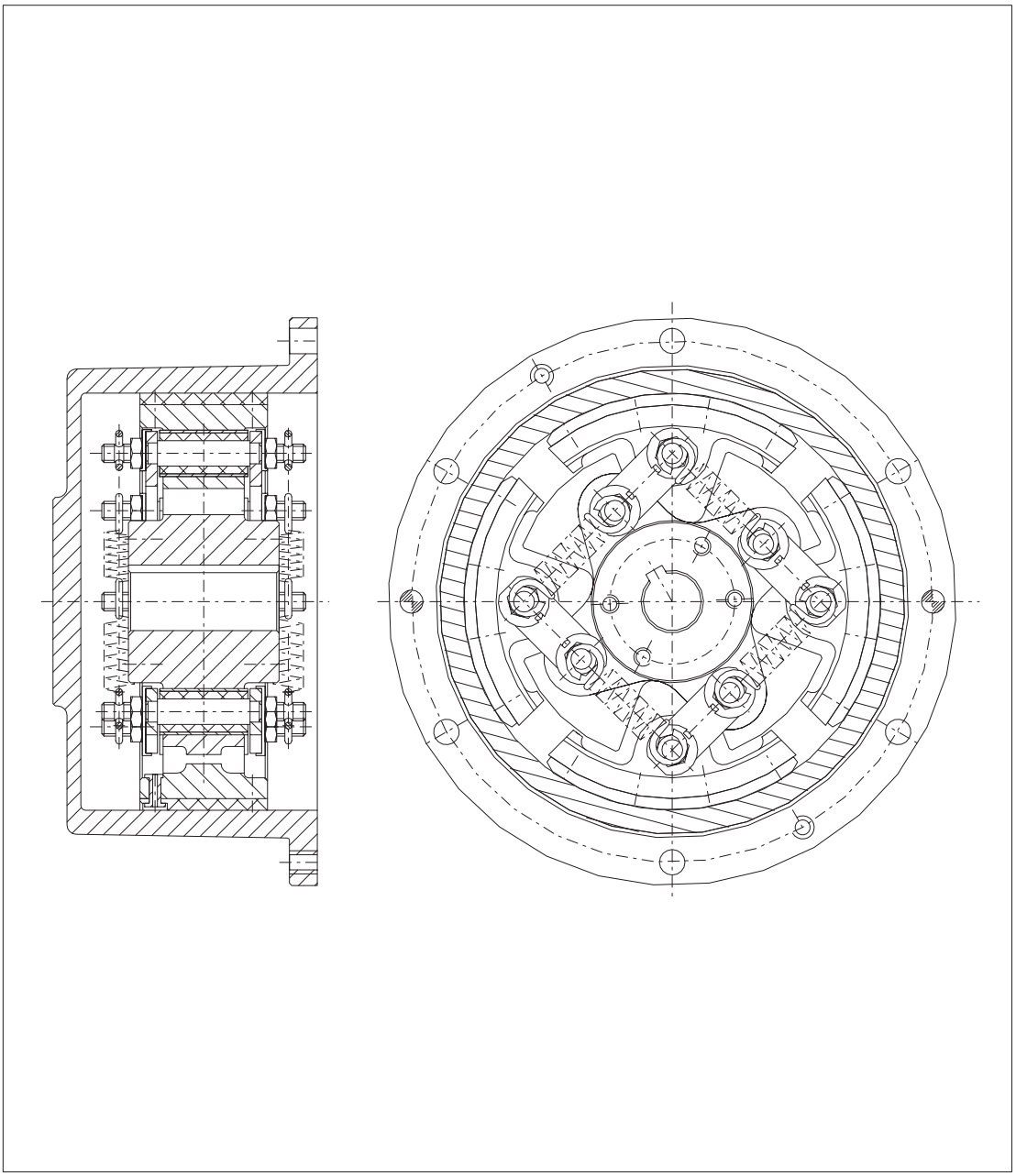

FLENDER

A. Friedr. Flender AG · 46393 Bocholt · Tel. 02871/92-0 · Telefax 02871/92-2596 · www.flender.com

Contents

1.	**Technical data**	**3**
1.1	General technical data	3
1.2	Brake torque	3
1.3	Idling speed	4
2.	**General notes**	**4**
2.1	General	4
3.	**Safety notes**	**5**
3.1	Safety notes	5
3.1.1	Notes and symbols in the operating instructions	5
4.	**Handling and storage**	**5**
4.1	Scope of supply	5
4.2	Handling	6
4.3	Storage	6
4.3.1	Storage of the centrifugal brake	6
4.3.2	Storage room	6
5.	**Technical description**	**6**
5.1	General description	6
6.	**Assembly**	**7**
6.1	General installation notes	7
6.2	Mounting the centrifugal brake	7
6.2.1	Assembly with one centrifugal unit	8
6.2.2	Assembly with one centrifugal unit and shaft seal	9
6.2.3	Assembly with two centrifugal units	10
6.2.4	Assembly with two centrifugal unit and shaft seal	11
7.	**Startup**	**12**
7.1	Measures before startup	12
8.	**Operation**	**12**
8.1	General operating data	12
9.	**Disturbances, reasons and remedy**	**12**
9.1	General	12
9.2	Possible malfunctions	12
10.	**Maintenance and repair**	**13**
10.1	General	13
10.2	Replacing the friction linings (5)	13
11.	**Spare parts stock, service facility addresses**	**15**
11.1	Service facility addresses	15
12.	**Declaration by the manufacturer**	**20**

1. Technical data

1.1 General technical data

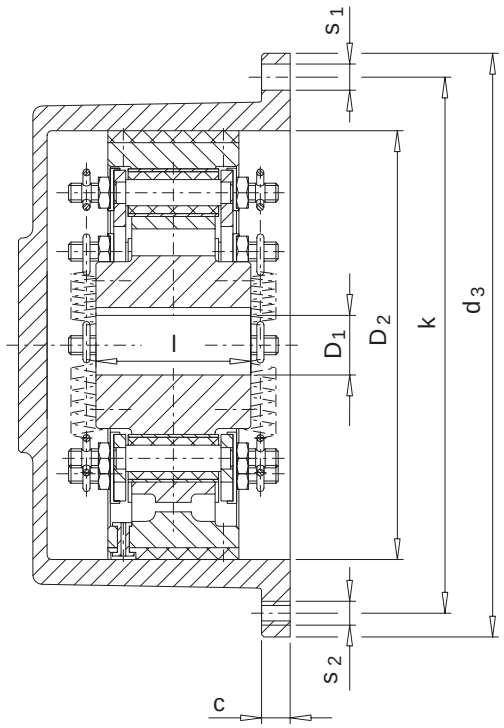

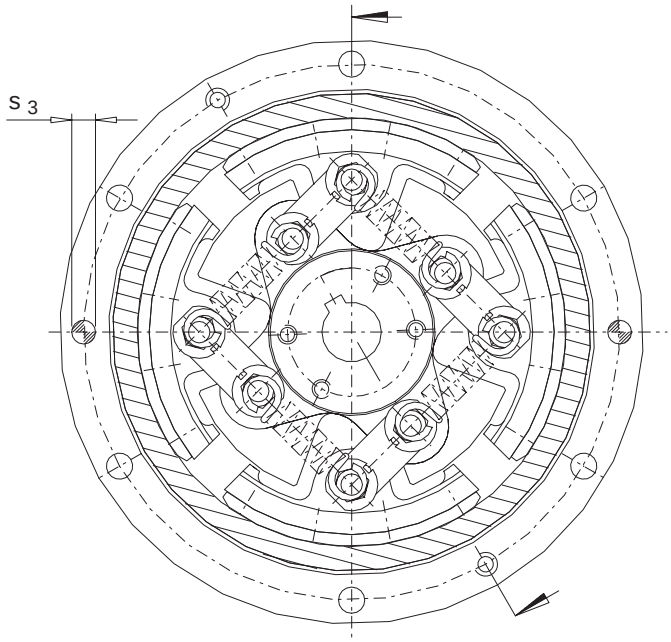

with one centrifugal unit

with two centrifugal units

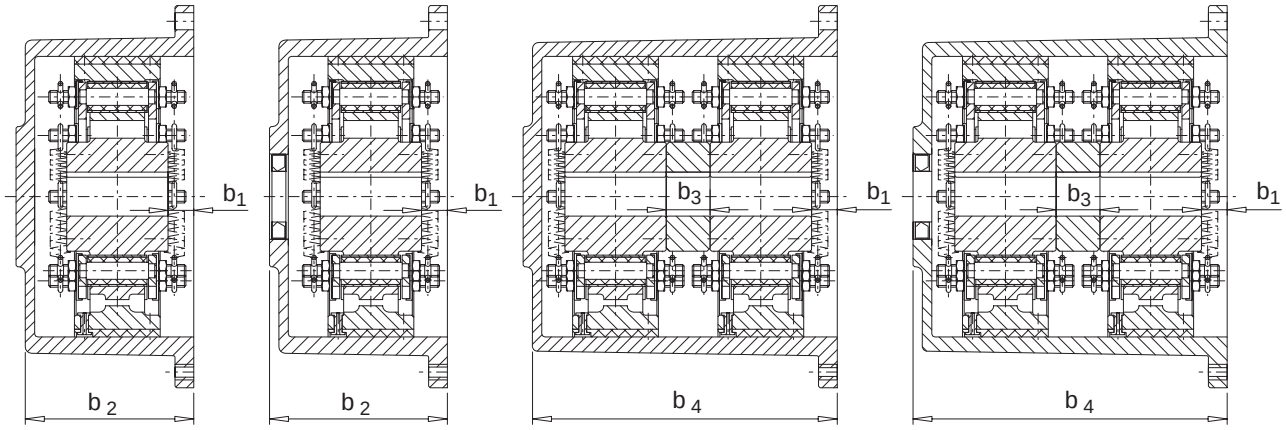

with shaft seal

with shaft seal

Size	D_1 max. mm	l mm	D_2 H7 mm	k mm	d_3 mm	c mm	s_1 mm	s_1 Quantity mm	s_2	s_2 Quantity mm	s_3 H7 mm	s_3 1) Quantity mm	b_1 mm	b_2 mm	b_3 mm	b_4 mm
180	45	65	180	225	245	12	11	6	M 10	2	10	2	16.5	114	20	195
208	55	100	208	260	285	14	14	6	M 12	2	10	2	12	140	20	259

Table 1.1: Dimensions of the centrifugal brake

1) Bored and reamed together with the counterpart

1.2 Brake torque

When designing the centrifugal brake, the brake torque should be higher than the input torque of the auxiliary gear unit.

Brake torque per centrifugal unit (2-10): Size 180: 300 Nm
Size 208: 500 Nm

1.3 Idling speed

When designing the centrifugal brake, the idling speed should be higher than the input speed of the auxiliary gear unit.

Size	Idling speed in 1/min				
180		1000	1200	1500	1800
208	900	1000	1200		

Table 1.2: Idling speeds

2. General notes

2.1 General

These Operating Instructions constitute part of the brake shipment and should be kept in the immediate vicinity of the brake at all times.

Only a precise knowledge of the Operating Instructios will ensure trouble-free operation of the brake. It is therefore in the interest of our customer that the Operating Instructions are read, understood and observed in all respects by the persons responsible for handling, installation and operation.

Note: We accept no liability for any damage or malfunction resulting from non-observance of the operating instructions.

The ”**brake**” dealt with in these operating instructions was developed for stationary use in general engineering.

The centrifugal brake is only designed for the field of application as specified in Section 1. ”Technical data”. Operating conditions which differ from the stated will require fresh contractual agreements.

The brake described here is in accordance with the state-of-the-art at the time of these Operating Instructions go into print.

In the interest of further development, we reserve the right to introduce modifications which, while retaining the essential features, can be regarded as desirable to increase its efficiency and safety.

The copyright of these Operating Instructions remains the property of **FLENDER AG.**

These operating instructions may not be duplicated in part or whole, utilized for the purpose of publicity or communicated to third parties without our expressed consent.

Please contact our works listed below in respect of all technical queries.

FLENDER AG Telephon: 02871/92-2800
D 46393 Bocholt Telefax: 02871/92-2801

or one of our service branches which are listed in Section 11. ”Stocking spare parts, service facility addresses”.

3. Safety notes

3.1 Safety notes

- The brake is constructed in accordance with the state-of-the-art and is reliable in the condition as shipped. Unauthorized modifications which impair its reliability are not permissible. This also applies to guards which are fitted as protection against accidential contact.
- The brake may only be used and operated within the scope of the condition specified in the contract of performance and supply.
- The customer should ensure that the persons entrusted with installation, operation, care and maintenance as well as repair have read and understood the operating instructions and observe them in all respects in order to:

  – prevent hazard to life and limb of the user and third parties

  – ensure the reliability of the brake

  and

  – prevent failure and environmental pollution due to incorrect handling.
- The relevant regulations concerning industrial safety and pollution control should be observed during handling, installation, operation as well as care and maintenance.
- The brake may only be operated, serviced and repaired by authorized, trained and properly instructed personnel.
- All works should be carried out with care with the safety aspect in mind.
- All works on the brake may only be carried out when it is stationary.
  The drive unit must be secured to prevent accidental startup (e.g.by locking the key switch or removing the fuses in the power supply). A notice should be displayed at the switch-on point stating that work is in progress on the brake.
- The drive unit should be shut off at once if changes in the brake are detected during operation, such as e.g. changed running noises.
- The brake must be protected by means of suitable guards to prevent accidental contact.
- During installation of the brake in units or systems, the manufacturer of the units or systems is obliged to incorporate the requirements, notes and descriptions contained in these Operating Instructions in his own operating instructions.

3.1.1 Notes and symbols in the operating instructions

Instructions in the operating instructions which concern operating safety are emphasized as follows:

⚠ This symbol draws attention tosafety measures which must be observed to prevent **personal injury**.

Caution! This symbol draws attention to safety measures which must be observed to prevent **damage to the brake**.

Note: This note draws attention to general **operating notes** which should be especially observed.

4. Handling and storage

4.1 Scope of supply

The scope of the shipment is listed in the shipping documents. They should be checked for completeness on receipt. Any shipping damage and/or missing parts should be reported in writing at once. After consulting FLENDER an expert is to be called in.

4.2 Handling

The packing of the brake will differ depending on method of shipment and size. The packing, unless otherwise agreed contractually, complies with **HPE Packing Guidelines**.

The symbols shown on the packing should be noted. Their meaning is as follows:

bild-transport

This way up	Fragile	Keep dry	Keep cool	Centre of gravity	Use no hand hook	Attach here

Caution! **Make sure that suitable hoists are used.**

4.3 Storage

4.3.1 Storage of the centrifugal brake

The centrifugal brake is delivered in a preserved state and can be stored in a covered dry place up to 6 months. If the brake shall be stored for a longer period of time, an appropriate long-term presveration is ncessary (consultation with FLENDER required).

Caution! **The friction linings (5) must be absolutely free from grease.**

4.3.2 Storage room

The storage room should be dry and dust-free. Most storage rooms are unsuitable. Make sure that no condensation develops. The relative humidity of air is most favourable below 65 %.

5. Technical description

5.1 General description

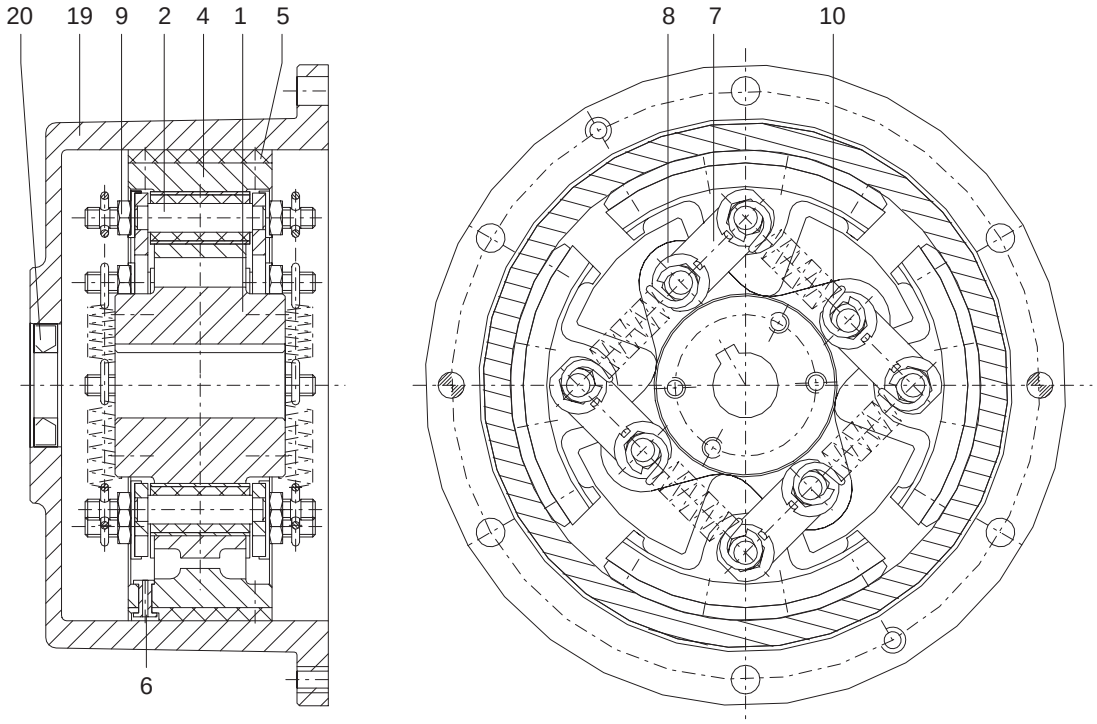

The centrifugal brakes are dependent on speed and direction of rotation.

The centrifugal brake limits the runaway speed on the input shaft of the auxiliary drive when the machine swings back (reverse operating direction of rotation and auxiliary drive switched on).

Mount the cam part (1) onto the input shaft of the auxiliary drive.

6. Assembly

6.1 General installation notes

For the installation the safety notes in Section 3. are to be observed.

The installation has to be carried out with utmost care by trained personnel.

Already during the planning phase it is to be observed that sufficient room is to be provided for the installation and later inspection and maintenance work.

Before starting the installation a sufficient number of hoists must be provided for.

6.2 Mounting the centrifugal brake

Before starting the assembly, thoroughly clean the shaft end as well as the parts of the centrifugal brake.

⚠ **Observe the manufactuer's instructions on handling the solvents.**

Caution! **The friction linings (5) as well as the braking surface inside the brake drum (19) must be absolutely free from grease.**

Slightly grease the remaining parts of the centrifugal brake as well as the shaft end.

Caution! **Before mounting the centrifugal brake onto the gear unit shaft, check the position of the tension springs (10).**

Braking direction opposite to the operating direction

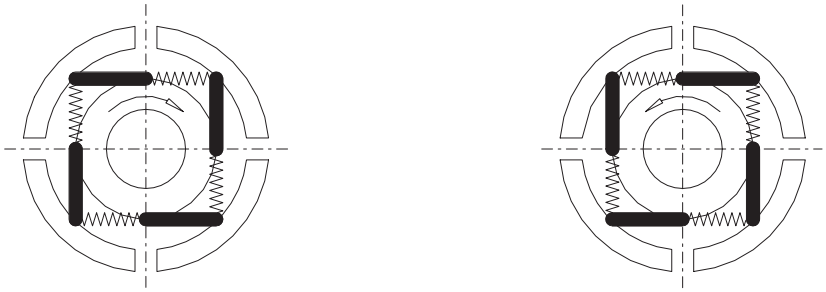

Mounting position for clockwise direction of rotation Mounting position for counterclockwise direction of rotation

View on the shaft face of the shaft onto which the brake is mounted.

6.2.1 Assembly with one centrifugal unit

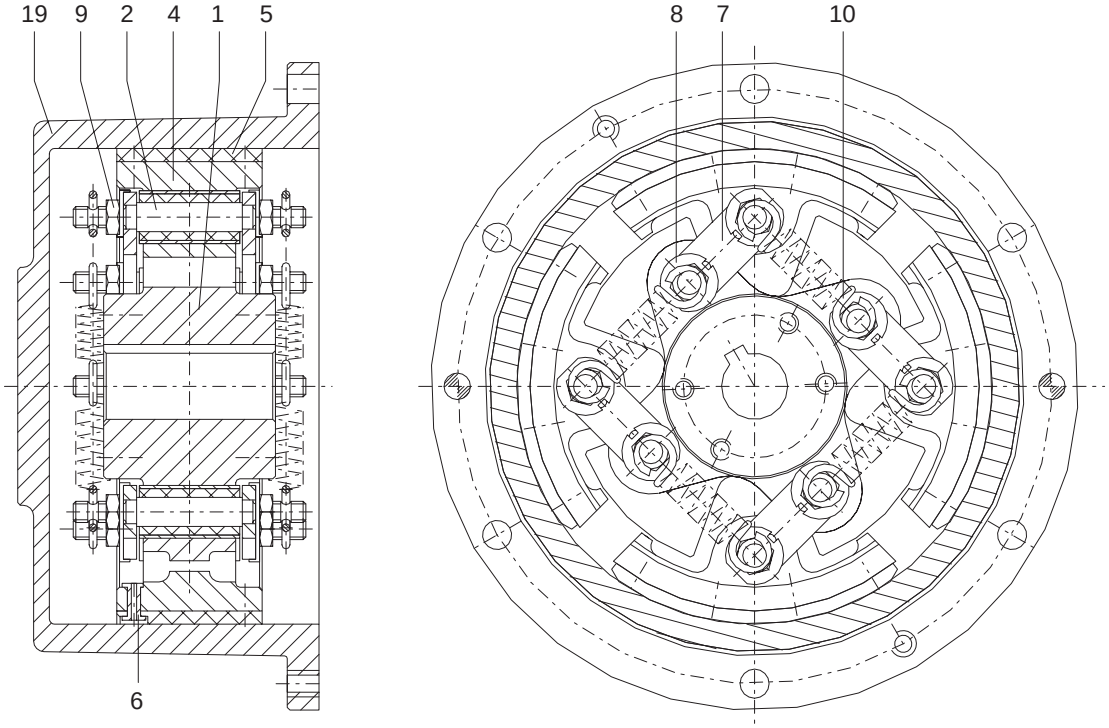

The cam part (1) is delivered complete with assembled centrifugal units (2-10).

Caution! **The complete cam part (1) should be fitted by means of suitable devices in order to prevent damage to the shaft bearing arrangement by the axial fitting force. Make sure that suitable hoists are used.**

Caution! **Observe the position of the tension springs (10) according to item 6.2.**

Warming up the cam part (1) (max. +50 °C) might make the fitting easier.

⚠ **Protect yourself against burns by hot parts!**

Axially secure the cam part (1) with an end plate or a circlip according to DIN 471.

Push the brake drum (19) over the friction linings (5) flush against the gear unit cover and secure it to the gear unit cover with screws and pins. Observe the data on the pin holes in Section 1., item 1.1.

6.2.2 Assembly with one centrifugal unit and shaft seal

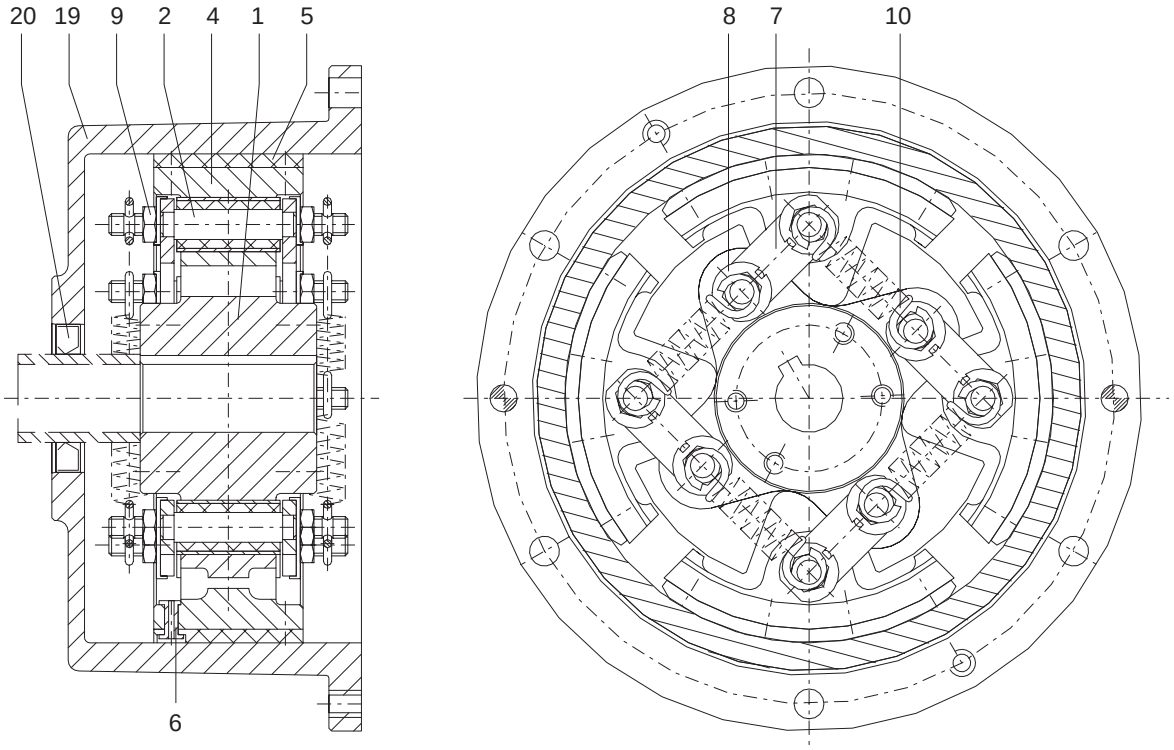

The cam part (1) is delivered complete with assembled centrifugal units (2-10).

Caution! **The complete cam part (1) should be fitted by means of suitable devices in order to prevent damage to the shaft bearing arrangement by the axial fitting force. Make sure that suitable hoists are used.**

Caution! **Observe the position of the tension springs (10) according to item 6.2.**

Warming up the cam part (1) (max. +50 °C) might make the fitting easier.

⚠ **Protect yourself against burns by hot parts!**

Slide the bush over the shaft flush against the cam part (1).

Caution! **Insert the sealing lip of the shaft seal (20) with grease.**

Install the shaft seal (20) into the brake drum (19). Slide the assembly (19, 20) over the friction linings (5) flush against the housing cover. Secure the brake drum (19) to the gear unit cover with screws and pins. Observe the data on the pin holes in Section 1., item 1.1.

Axially secure the cam part (1) through the bush by means of an end plate.

6.2.3 Assembly with two centrifugal units

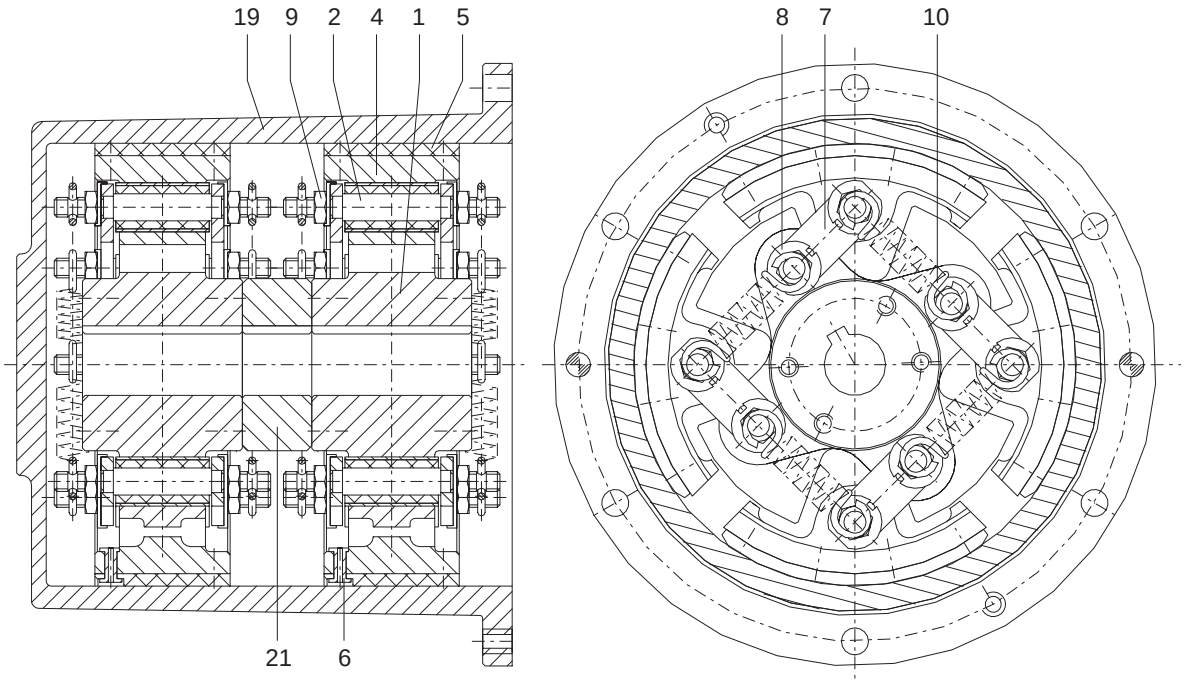

The cam parts (1) are delivered complete with centrifugal units (2-10).

Caution! **The complete inside cam part (1), the distance ring (21) and the complete outside cam part (1) should be fitted by means of suitable devices in order to prevent damage to the shaft bearing arrangement by the axial fitting force. Make sure that suitable hoists are used.**

Caution! **Observe the position of the tension springs (10) according to item 6.2. The two cam parts must be in the same position.**

Warming up the cam parts (1) (max. +50 °C) might make the fitting easier.

⚠ **Protect yourself against burns by hot parts!**

Axially secure cam parts (1) and distance ring (21) with an end plate or a circlip according to DIN 471.

Push the brake drum (19) over the friction linings (5) flush against the gear unit cover and secure it to the gear unit cover with screws and pins. Observe the data on the pin holes in Section 1., item 1.1.

6.2.4 Assembly with two centrifugal unit and shaft seal

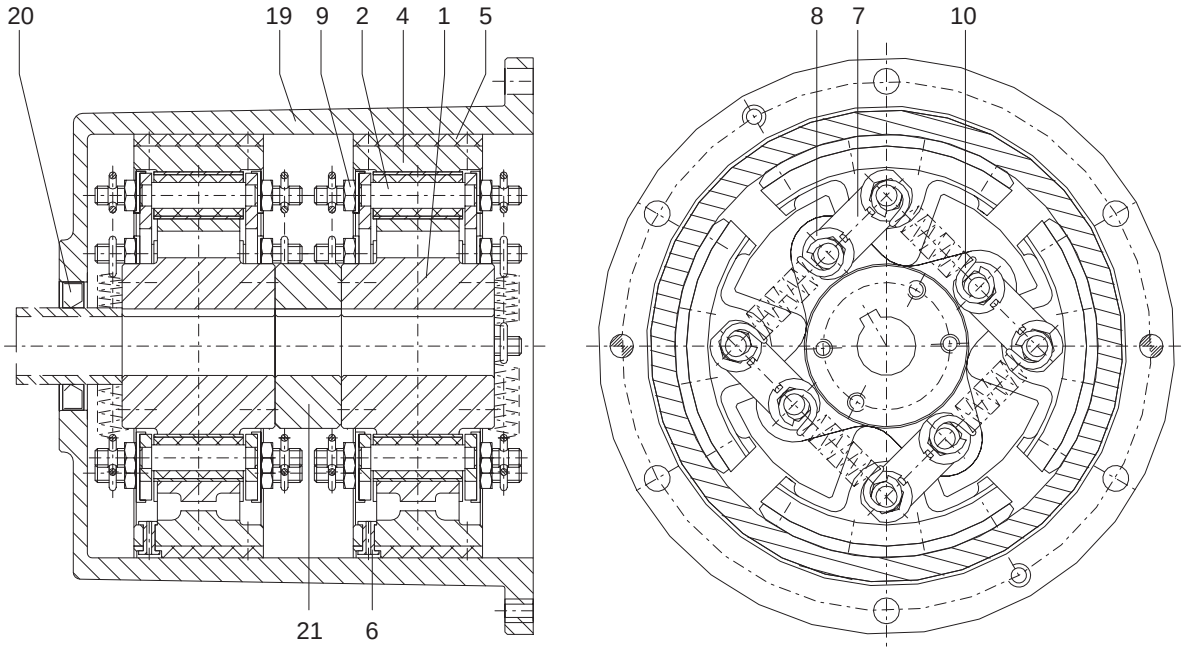

The cam parts (1) are delivered complete with centrifugal units (2-10).

Caution! **The complete inside cam part (1), the distance ring (21) and the complete outside cam part (1) should be fitted by means of suitable devices in order to prevent damage to the shaft bearing arrangement by the axial fitting force. Make sure that suitable hoists are used.**

Caution! **Observe the position of the tension springs (10) according to item 6.2. The two cam parts must be in the same position.**

Warming up the cam parts (1) (max. +50 °C) might make the fitting easier.

⚠ **Protect yourself against burns by hot parts!**

Axially secure cam parts (1) and distance ring (21) with an end plate or a circlip according to DIN 471.

Slide the bush over the shaft flush against the cam part (1).

Install the shaft seal (20) into the brake drum (19). Slide the assembly (19, 20) over the friction linings (5) flush against the housing cover. Secure the brake drum (19) to the gear unit cover with screws and pins. Observe the data on the pin holes in Section 1., item 1.1.

Caution! **Insert the sealing lip of the shaft seal (20) with grease.**

Axially secure the cam part (1) through the bush by means of an end plate.

7. Startup

7.1 Measures before startup

Before startup, check the screw connection of brake drum (19) and housing cover.

8. Operation

8.1 General operating data

During operation, the centrifugal brake should be checked for

– any changes in running noises

– a sudden temperature rise during operation in operating direction of rotation.

Caution!

If irregularities are detected during operation, the drive assembly should be set off immediately. The cause of the malfunction should be determined with the aid of the Troubleshooting Table (Section 9.).
The Troubleshooting Table lists possible malfunctions, their causes and suggestions for remedying them.
If the cause cannot be determined or there is no facility for repair with suitable equipment, we recommend calling in one of our service fitters (see Section 11.).

9. Disturbances, reasons and remedy

9.1 General

The malfunctions listed below can only be hints for a troubleshooting.

In case of a complex plant, all other components have always to be included in the troubleshooting.

The centrifugal brake has to run with low noise and without shaking in operating direction of rotation. Any deviating behaviour is to be regarded as malfunction and should be removed immediately.

⚠ **Before maintenance work, repairs or other work, the operator should make sure that the whole drive train is stationary. Especially the drive motors are to be secured against accidental start up.**
Futhermore, we refer to the relevant regulations on the prevention of accidents at the place of installation.

9.2 Possible malfunctions

Malfunction	Possible cause	Remedy
Sudden change in noise level and/or temperature rise of the brake drum (19) when turning in operating direction of rotation	Friction linings (5) worn and/or tension springs (10) overstretched	Shut down the plant Check friction linings (5) and tension spirngs (10) and replace damaged parts

10. Maintenance and repair

10.1 General

Caution! **Carry out maintenance work only with the complete machine system stationary.**

If provided with shaft seal (20), the sealing lip of the shaft seal (20) should be relubricated every three months.

After every second or third braking (swinging back of the machine), check the friction linings (5). For this purpose, the brake drum (19) has to be dismounted.

The friction linings (5) must have a min. thickness of 2.5 mm.

Caution! **When less than 2.5 mm, replace the friction linings (5).**
We recommend to replace the tension springs (10) at the same time.

Caution! **Replace the friction linings (5) in sets for the complete centrifugal brake.**

10.2 Replacing the friction linings (5)

Remove the brake drum (19) from the gear unit cover.

Caution! **Before continuing the disassembly of the centrifugal brake, mark the position of the centrifugal weights (4) in relation to the cam part (1) in continuous order.**

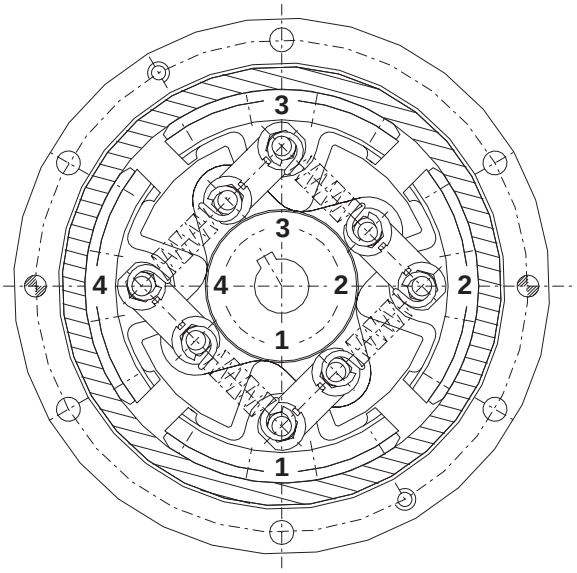

Pull off the complete cam part (1) together with the centrifugal unit (2-10) from the gear unit shaft by means of a suitable pull-off device.

Remove tension springs (10).

Caution! **Be careful with the recoiling tension springs (10).**

Loosen locking plates (8), screw off nuts (9), remove centrifugal weight (4) together with assembled rubber-metal bolt (2) and lever (7).

Remove tubular rivet (6) and friction linings (5).

Clean all parts from abraded particles.

⚠ **Observe the manufactuer's instructions on handling the solvents.**

Rivet the new friction linings (5) to the centrifugal weights (4, 7) with new tubular rivets (6).

Caution! **The friction linings (5) as well as the braking surface inside the brake drum (19) must be absolutely free from grease.**

Slightly grease the remaining parts of the centrifugal brake as well as the shaft end.

Place the centrifugal weights (4, 7) into the recesses in the cam part (1).

Caution! **Observe the marks on the cam part (1) and the centrifugal weights.**

Mount the locking plates (8) and slightly tighten the nuts (9).

Caution! **Before tightening the nuts (9) securely, place strips of 1 mm between the locating surfaces of cam part (1) and centrifugal weight (4).**

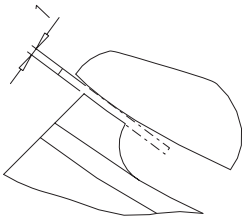

Tighten the nuts (9) and secure them with locking plates (8).

Tightening torque T_A :	Size 180:	25 Nm
	Size 208:	86 Nm

Caution! **Remove strips.**

Install tension springs (10).

Caution! **Do not overstretch the tension springs (10).**

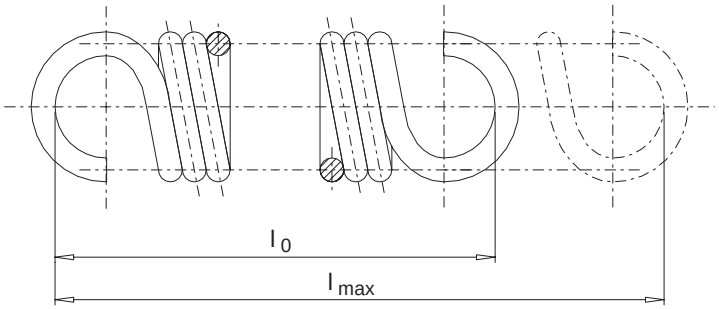

Length l_{max} of tension springs:	Size 180:	60 mm
	Size 208:	75 mm

Mount the cam part (1) complete with centrifugal units (2-10) and assemble the brake drum (19) with/without shaft seal (20) according to Section 6.

11. Spare parts stock, service facility addresses

Maintaining a stock of the most essential spare and wear parts is an important prerequisite for the permanent serviceability of the centrifugal brake.

When ordering spare parts, the following data should be stated:

– Part No. (see Section 5.)

– Description / Size

– Quantity

We assume warranty only for original spare parts supplied by us.

Caution! **We would expressly draw attention to the fact that spare parts and accessories not supplied by us have not been tested or approved by us either. Fitting and/or use of such products can therefore under certain circumstances adversely affect structurally specified properties of the centrifugal brake and will thus impair active and/or passive safety. No form of reliability or warranty will be assumed by FLENDER for damage occasioned by use of non-original spare parts and accessories.**

Please note that production and supply specifications frequently exist for components and we will always offer spare parts in accordance with the state of the art and in accordance with the latest legal requirements.

11.1 Service facility addresses

When ordering spare parts or requesting a service fitter, please contact FLENDER AG first of all.

FLENDER Germany

A. FRIEDR. FLENDER AG
46393 Bocholt - Tel.: (0 28 71) 92-0 - Fax: (0 28 71) 92 25 96
E-mail: contact@flender.com • www.flender.com
Shipping address: Alfred - Flender - Strasse 77 - 46395 Bocholt

A. FRIEDR. FLENDER AG - Kupplungswerk Mussum
Industriepark Bocholt - Schlavenhorst 100 - 46395 Bocholt - Tel.: (0 28 71) 92 28 68 - Fax: (0 28 71) 92 25 79
E-mail: couplings@flender.com • www.flender.com

A. FRIEDR. FLENDER AG - Werk Friedrichsfeld
Am Industriepark 2 - 46562 Voerde - Tel.: (0 28 71) 92-0 - Fax: (0 28 71) 92 25 96
E-mail: contact@flender.com • www.flender.com

A. FRIEDR. FLENDER AG - Getriebewerk Penig
Thierbacher Strasse 24 - 09322 Penig - Tel.: (03 73 81) 60 - Fax: (03 73 81) 8 02 86
E-mail: ute.tappert@flender.com • www.flender.com

FLENDER - TÜBINGEN GMBH
72007 Tübingen - Tel.: (0 70 71) 7 07-0 - Fax: (0 70 71) 70 74 00
E-mail: sales-motox@flender-motox.com • www.flender.com
Shipping address: Bahnhofstrasse 40 - 72072 Tübingen

LOHER GMBH
94095 Ruhstorf - Tel.: (0 85 31) 3 90 - Fax: (0 85 31) 3 94 37
E-mail: info@loher.de • www.loher.de
Shipping address: Hans-Loher-Strasse 32 - 94099 Ruhstorf

FLENDER SERVICE GMBH
44607 Herne - Tel.: (0 23 23) 940-0 - Fax: (0 23 23) 940 333
E-mail: infos@flender-service.com • www.flender-service.com
24h Service Hotline +49 (0) 17 22 81 01 00
Shipping address: Südstrasse 111 - 44625 Herne

A. FRIEDR. FLENDER AG - FLENDER GUSS
Obere Hauptstrasse 228-230 - 09228 Chemnitz / Wittgensdorf - Tel.: (0 37 22) 64-0 - Fax: (0 37 22) 64 21 89
E-mail: flender.guss@flender-guss.com • www.flender-guss.de

Germany

A. FRIEDR. FLENDER AG
46393 BOCHOLT - TEL.: (0 28 71) 92 - 0 - FAX: (0 28 71) 92 25 96
SHIPPING ADDRESS: ALFRED - FLENDER - STRASSE 77 - 46395 BOCHOLT

E-mail: contact@flender.com • www.flender.com

VERTRIEBSZENTRUM BOCHOLT
46393 Bocholt
Alfred-Flender-Strasse 77, 46395 Bocholt
Tel.: (0 28 71) 92 - 0
Fax: (0 28 71) 92 - 14 35
E-mail: vz.bocholt@flender.com

VERTRIEBSZENTRUM STUTTGART
70472 Stuttgart
Friolzheimer Strasse 3, 70499 Stuttgart
Tel.: (07 11) 7 80 54 - 51
Fax: (07 11) 7 80 54 - 50
E-mail: vz.stuttgart@flender.com

VERTRIEBSZENTRUM MÜNCHEN
85750 Karlsfeld
Liebigstrasse 14, 85757 Karlsfeld
Tel.: (0 81 31) 90 03 - 0
Fax: (0 81 31) 90 03 - 33
E-mail: vz.muenchen@flender.com

VERTRIEBSZENTRUM BERLIN
Schlossallee 8, 13156 Berlin
Tel.: (0 30) 91 42 50 58
Fax: (0 30) 47 48 79 30
E-mail: vz.berlin@flender.com

FLENDER International

(2003-12-01)

E U R O P E

AUSTRIA
Flender Ges.m.b.H.
Industriezentrum Nö-Süd
Strasse 4, Objekt 14, Postfach 132
2355 Wiener Neudorf
Phone: +43 (0) 22 36 6 45 70
Fax: +43 (0) 22 36 6 45 70 10
E-mail: office@flender.at
www.flender.at

BELGIUM & LUXEMBOURG
N.V. Flender Belge S.A.
Cyriel Buyssestraat 130
1800 Vilvoorde
Phone: +32 (0) 2 - 2 53 10 30
Fax: +32 (0) 2 - 2 53 09 66
E-mail: sales@flender.be

BULGARIA
A. Friedr. Flender AG
Branch Office
c/o Auto - Profi GmbH
Alabin Str., 1000 Sofia
Phone: +359 (0) 2 - 9 80 66 06
Fax: +359 (0) 2 - 9 80 33 01
E-mail: sofia@auto-profi.com

CROATIA / SLOVENIA
BOSNIA-HERZEGOVINA
A. Friedr. Flender AG
Branch Office
c/o HUM - Naklada d.o.o.
Mandroviceva 3, 10000 Zagreb
Phone: +385 (0) 1 - 2 30 60 25
Fax: +385 (0) 1 - 2 30 60 24
E-mail: flender@hi.hinet.hr

CZECH REPUBLIC
A. Friedr. Flender AG
Branch Office
Hotel DUO, Teplicka 17
19000 Praha 9
Phone: +420 (0) 2 - 83 88 23 00
Fax: +420 (0) 2 - 83 88 22 05
E-mail: flender_pumprla@hotelduo.cz

DENMARK
Flender Scandinavia A/S
Rugmarken 35 B, 3520 Farum
Phone: +45 - 70 22 60 03
Fax: +45 - 44 99 16 62
E-mail: kontakt@flenderscandinavia.com
www.flenderscandinavia.com

ESTHONIA / LATVIA / LITHUANIA
Flender Branch Office
Addinol Mineralöl Marketing OÜ
Suur-Söjamäe 32
11415 Tallinn / Esthonia
Phone: +372 (0) 6 - 27 99 99
Fax: +372 (0) 6 - 27 99 90
E-mail: flender@addinol.ee
www.addinol.ee

FINLAND
Flender Oy
Ruosilantie 2 B, 00390 Helsinki
Phone: +358 (0) 9 - 4 77 84 10
Fax: +358 (0) 9 - 4 36 14 10
E-mail: webmaster@flender.fi
www.flender.fi

FRANCE
Flender s.a.r.l.
3, rue Jean Monnet - B.P. 5
78996 Elancourt Cedex
Phone: +33 (0) 1 - 30 66 39 00
Fax: +33 (0) 1 - 30 66 35 13
E-mail: sales@flender.fr

SALES OFFICES:
Flender s.a.r.l.
36, rue Jean Broquin
69006 Lyon
Phone: +33 (0) 4 - 72 83 95 20
Fax: +33 (0) 4 - 72 83 95 39
E-mail: sales@flender.fr

Flender - Graffenstaden SA
1, rue du Vieux Moulin
67400 Illkirch-Graffenstaden
B.P. 84
67402 Illkirch - Graffenstaden
Phone: +33 (0) 3 - 88 67 60 00
Fax: +33 (0) 3 - 88 67 06 17
E-mail: flencomm@flender-graff.com

GREECE
Flender Hellas Ltd.
2, Delfon str., 11146 Athens
Phone: +30 210 - 2 91 72 80
Fax: +30 210 - 2 91 71 02
E-mail: flender@otenet.gr

Mangrinox S.A.
14, Grevenon str., 11855 Athens
Phone: +30 210 - 3 42 32 01
Fax: +30 210 - 3 45 99 28
E-mail: mangrinox@otenet.gr

HUNGARY
A. Friedr. Flender AG
Branch Office
Bécsi Út 3-5, 1023 Budapest
Phone: +36 (0) 1 - 3 45 07 90 / 91
Fax: +36 (0) 1 - 3 45 07 92
E-mail: jambor.laszlo@axelero.hu

ITALY
Flender Cigala S.p.A.
Parco Tecnologico Manzoni
Palazzina G
Viale delle industrie, 17
20040 Caponago (MI)
Phone: +39 (0) 02 - 95 96 31
Fax: +39 (0) 02 -95 74 39 30
E-mail: info@flendercigala.it

THE NETHERLANDS
Flender Nederland B.V.
Industrieterrein Lansinghage
Platinastraat 133
2718 ST Zoetermeer
Postbus 725
2700 AS Zoetermeer
Phone: +31 (0) 79 - 3 61 54 70
Fax: +31 (0) 79 - 3 61 54 69
E-mail: sales@flender.nl
www.flender.nl

SALES OFFICES:
Flender Nederland B.V.
Lage Brink 5-7
7317 BD Apeldoorn
Postbus 1073
7301 BH Apeldoorn
Phone: +31 (0) 55 - 5 27 50 00
Fax: +31 (0) 55 - 5 21 80 11
E-mail: tom.alberts@flender-group.com

Bruinhof B.V.
Boterdiep 37
3077 AW Rotterdam
Postbus 9607
3007 AP Rotterdam
Phone: +31 (0) 10 - 4 97 08 08
Fax: +31 (0) 10 - 4 82 43 50
E-mail: info@bruinhof.nl
www.bruinhof.nl

NORWAY
Elektroprosess AS
Frysjaveien 40, 0884 Oslo
Postboks 165, Kjelsås
0411 Oslo
Phone: +47 (0) 2 - 2 02 10 30
Fax: +47 (0) 2 - 2 02 10 50 / 51
E-mail: post@elektroprosess.no

POLAND
A. Friedr. Flender AG
Branch Office
Przedstawicielstwo w Polsce
ul. Wyzwolenia 27
43 - 190 Mikolów
Phone: +48 (0) 32 - 2 26 45 61
Fax: +48 (0) 32 - 2 26 45 62
E-mail: flender@pro.onet.pl
www.flender.pl

PORTUGAL
Rodamientos FEYC, S.A
R. Jaime Lopes Dias, 1668 CV
1750 - 124 Lissabon
Phone: +351 (0) 21 - 7 54 24 10
Fax: +351 (0) 21 - 7 54 24 19
E-mail: info@rfportugal.com

ROMANIA
A. Friedr. Flender AG
Branch Office
98 - 106, Soseaua Mihai Bravu
Sector 2, Bloc D 16, Sc 1, Apartament 4
021331 Bucuresti - 2
Phone: +40 (0) 21 - 4 91 10 08
Fax: +40 (0) 21 - 4 91 10 08
E-mail: flender@fx.ro

RUSSIA
F & F GmbH
Tjuschina 4-6
191119 St. Petersburg
Phone: +7 (0) 8 12 - 3 20 90 34
Fax: +7 (0) 8 12 - 3 40 27 60
E-mail: flendergus@mail.spbnit.ru

SLOVAKIA
A. Friedr. Flender AG
Branch Office
Vajanského 49
P.O. Box 286, 08001 Presov
Phone: +421 (0) 51 - 7 70 32 67
Fax: +421 (0) 51 - 7 70 32 67
E-mail: micenko.flender@nextra.sk

SPAIN
Flender Ibérica S.A.
Poligono Industrial San Marcos
Calle Morse, 31 (Parcela D-15)
28906 Getafe - Madrid
Phone: +34 (0) 91 - 6 83 61 86
Fax: +34 (0) 91 - 6 83 46 50
E-mail: f-iberica@flender.es
www.flender.es

SWEDEN
Flender Scandinavia
Äsenvägen 2
44339 Lerum
Phone: +46 (0) 302 - 1 25 90
Fax: +46 (0) 302 - 1 25 56
E-mail: kontakt@flenderscandinavia.com
www.flenderscandinavia.com

SWITZERLAND
Flender AG
Zeughausstr. 48
5600 Lenzburg
Phone: +41 (0) 62 8 85 76 00
Fax: +41 (0) 62 8 85 76 76
E-mail: info@flender.ch
www.flender.ch

TURKEY
Flender Güc Aktarma Sistemleri
Sanayi ve Ticaret Ltd. Sti.
IMES Sanayi, Sitesi
E Blok 502. Sokak No. 22
81260 Dudullu - Istanbul
Phone: +90 (0) 2 16 - 4 66 51 41
Fax: +90 (0) 2 16 3 64 59 13
E-mail: cuzkan@flendertr.com
www.flendertr.com

UKRAINE
A. Friedr. Flender AG
Branch Office, c/o DIV - Deutsche Industrie-
vertretung, Prospect Pobedy 44
252057 Kiev
Phone: +380 (0) 44 - 4 46 80 49
Fax: +380 (0) 44 - 2 30 29 30
E-mail: flender@div.kiev.ua

UNITED KINGDOM & EIRE
Flender Power Transmission Ltd.
Thornbury Works, Leeds Road
Bradford
West Yorkshire BD3 7EB
Phone: +44 (0) 12 74 65 77 00
Fax: +44 (0) 12 74 66 98 36
E-mail: flenders@flender-power.co.uk
www.flender-power.co.uk

SERBIA-MONTENEGRO
ALBANIA / MACEDONIA
A. Friedr. Flender AG
Branch Office
c/o G.P.Inzenjering d.o.o.
III Bulevar 54 / 19
11070 Novi Beograd
Phone: +381 (0) 11 - 60 44 73
Fax: +381 (0) 11 - 3 11 67 91
E-mail: flender@eunet.yu

A F R I C A

NORTH AFRICAN COUNTRIES
Please refer to Flender s.a.r.l.
3, rue Jean Monnet - B.P. 5
78996 Elancourt Cedex
Phone: +33 (0) 1 - 30 66 39 00
Fax: +33 (0) 1 - 30 66 35 13
E-mail: sales@flender.fr

EGYPT
Sons of Farid Hassanen
81 Matbaa Ahlia Street
Boulac 11221, Cairo
Phone: +20 (0) 2 - 5 75 15 44
Fax: +20 (0) 2 - 5 75 17 02
E-mail: hussein@sonfarid.com

SOUTH AFRICA
Flender Power Transmission (Pty.) Ltd.
Cnr. Furnace St & Quality Rd.
P.O. Box 131, Isando 1600
Johannesburg
Phone: +27 (0) 11 - 5 71 20 00
Fax: +27 (0) 11 - 3 92 24 34
E-mail: sales@flender.co.za
www.flender.co.za

SALES OFFICES:
Flender Power Transmission (Pty.) Ltd.
Unit 3 Marconi Park
9 Marconi Crescent, Montague Gardens
P.O. Box 37291
Chempet 7442, Cape Town
Phone: +27 (0) 21 - 5 51 50 03
Fax: +27 (0) 21 - 5 52 38 24
E-mail: sales@flender.co.za

Flender Power Transmission (Pty.) Ltd.
Unit 3 Goshawk Park
Falcon Industrial Estate
P.O. Box 1608
New Germany 3620, Durban
Phone: +27 (0) 31 - 7 05 38 92
Fax: +27 (0) 31 - 7 05 38 72
E-mail: sales@flender.co.za

Flender Power Transmission (Pty.) Ltd.
9 Industrial Crescent, Ext. 25
P.O. Box 17609, Witbank 1035
Phone: +27 (0) 13 - 6 92 34 38
Fax: +27 (0) 13 - 6 92 34 52
E-mail: sales@flender.co.za

Flender Power Transmission (Pty.) Ltd.
Unit 14 King Fisher Park, Alton
Cnr. Ceramic Curve & Alumina Allee
P.O. Box 101995
Meerensee 3901, Richards Bay
Phone: +27 (0) 35 - 7 51 15 63
Fax: +27 (0) 35 - 7 51 15 64
E-mail: sales@flender.co.za

A M E R I C A

ARGENTINA
Chilicote S.A.
Avda. Julio A. Roca 546
C 1067 ABN Buenos Aires
Phone: +54 (0) 11 - 43 31 66 10
Fax: +54 (0) 11 - 43 31 42 78
E-mail: chilicote@chilicote.com.ar

BRASIL
Flender Brasil Ltda.
Rua Quatorze, 60 - Cidade Industrial
32211 - 970, Contagem - MG
Phone: +55 (0) 31 - 33 69 21 00
Fax: +55 (0) 31 - 33 69 21 66
E-mail: vendas@flenderbrasil.com

SALES OFFICES:
Flender Brasil Ltda.
Rua James Watt, 142
conj. 142 - Brooklin Novo
04576 - 050, São Paulo - SP
Phone: +55 (0) 11 - 55 05 99 33
Fax: +55 (0) 11 - 55 05 30 10
E-mail: flesao@uol.com.br

Flender Brasil Ltda.
Rua Campos Salles, 1095
sala 04 - Centro 14015 - 110,
Ribeirão Preto - SP
Phone: +55 (0) 16 - 6 35 15 90
Fax: +55 (0) 16 - 6 35 11 05
E-mail: flender.ribpreto@uol.com.br

CANADA
Flender Power Transmission Inc.
215 Shields Court, Units 4 - 6
Markham, Ontario L3R 8V2
Phone: +1 (0) 9 05 - 3 05 10 21
Fax: +1 (0) 9 05 - 3 05 10 23
E-mail: flender@ca.inter.net
www.flenderpti.com

SALES OFFICE:
Flender Power Transmission Inc.
34992 Bemina Court
Abbotsford - Vancouver
B.C. V3G 1C2
Phone: +1 (0) 6 04 - 8 59 66 75
Fax: +1 (0) 6 04 - 8 59 68 78
E-mail: tvickers@rapidnet.net

CHILE / ARGENTINA / BOLIVIA
ECUADOR / PARAGUAY / URUGUAY
Flender Cono Sur Limitada
Avda. Galvarino Gallardo 1534
Providencia, Santiago
Phone: +56 (0) 2 - 2 35 32 49
Fax: +56 (0) 2 - 2 64 20 25
E-mail: flender@flender.cl
www.flender.cl

COLOMBIA
A.G.P. Representaciones Ltda.
Flender Liaison Office Colombia
Av Boyaca No 23A
50 Bodega UA 7-1, Bogotá
Phone: +57 (0) 1 - 5 70 63 53
Fax: +57 (0) 1 - 5 70 73 35
E-mail: aguerrero@agp.com.co
www.agp.com.co

MEXICO
Flender de Mexico S.A. de C.V.
17, Pte, 713 Centro
72000 Puebla
Phone: +52 (0) 2 22 - 2 37 19 00
Fax: +52 (0) 2 22 - 2 37 11 33
E-mail: szugasti@flendermexico.com
www.flendermexico.com

SALES OFFICES:
Flender de Mexico S.A. de C.V.
Lago Nargis No. 38
Col. Granada,
11520 Mexico, D.F.
Phone: +52 (0) 55 - 52 54 30 37
Fax: +52 (0) 55 - 55 31 69 39
E-mail: info@flendermexico.com

Flender de Mexico S.A. de C.V.
Ave. San Pedro No. 231-5
Col. Miravalle
64660 Monterrey, N.L.
Phone: +52 (0) 81 - 83 63 82 82
Fax: +52 (0) 81 - 83 63 82 83
E-mail: info@flendermexico.com

PERU
Potencia Industrial E.I.R.L.
Calle Victor González Olaechea N° 110
Urb. La Aurora - Miraflores,
P.O.Box: Av. 2 de Mayo N° 679
Of.108-Miraflores
Casilla N° 392, Lima 18
Phone: +51 (0) 1 - 2 42 84 68
Fax: +51 (0) 1 - 2 42 08 62
E-mail: cesarzam@chavin.rcp.net.pe

USA
Flender Corporation
950 Tollgate Road
P.O. Box 1449, Elgin, IL. 60123
Phone: +1 (0) 8 47 - 9 31 19 90
Fax: +1 (0) 8 47 - 9 31 07 11
E-mail: flender@flenderusa.com
www.flenderusa.com

Flender Corporation
Service Centers West
4234 Foster Ave.
Bakersfield, CA. 93308
Phone: +1 (0) 6 61 - 3 25 44 78
Fax: +1 (0) 6 61 - 3 25 44 70
E-mail: flender1@lightspeed.net

VENEZUELA
F. H. Transmisiones S.A.
Urbanización Buena Vista
Calle Johan Schafer o Segunda Calle
Municipio Sucre, Petare
Caracas
Phone: +58 (0) 2 - 21 52 61
Fax: +58 (0) 2 - 21 18 38
E-mail: fhtransm@telcel.net.ve
www.fhtransmisiones.com

A S I A

BANGLADESH / SRI LANKA
Please refer to Flender Limited
No. 2 St. George's Gate Road
5th Floor, Hastings
Kolkata - 700 022
Phone: +91 (0) 33 - 2 23 05 45
Fax: +91 (0) 33 - 2 23 18 57
E-mail: flender@flenderindia.com

PEOPLE'S REPUBLIC OF CHINA
Flender Power Transmission
(Tianjin) Co. Ltd.
ShuangHu Rd.- Shuangchen Rd. West
Beichen Economic Development
Area (BEDA)
Tianjin 300400
Phone: +86 (0) 22 - 26 97 20 63
Fax: +86 (0) 22 - 26 97 20 61
E-mail: flender@flendertj.com
www.flendertj.com

Flender Power Transmission
(Tianjin) Co. Ltd.
Beijing Office
C-415, Lufthansa Center
50 Liangmaqiao Road, Chaoyang District
Beijing 100016
Phone: +86 (0) 10 - 64 62 21 51
Fax: +86 (0) 10 - 64 62 21 43
E-mail: beijing@flenderprc.com.cn

Flender Power Transmission
(Tianjin) Co. Ltd.
Shanghai Office
1101-1102 Harbour Ring Plaza
18 Xizang Zhong Rd.
Shanghai 200 001
Phone: +86 (0) 21 - 53 85 31 48
Fax: +86 (0) 21 - 53 85 31 46
E-mail: shanghai@flenderprc.com.cn

Flender Power Transmission
(Tianjin) Co. Ltd.
Wuhan Office
Rm. 1503, Jianyin Building,
709 Jianshedadao
Wuhan 430 015
Phone: +86 (0) 27 - 85 48 67 15
Fax: +86 (0) 27 - 85 48 68 36
E-mail: wuhan@flenderprc.com.cn

Flender Power Transmission
(Tianjin) Co. Ltd.
Guangzhou Office
Rm. 2802, Guangzhou International
Electronics Tower
403 Huanshi Rd. East
Guangzhou 510 095
Phone: +86 (0) 20 - 87 32 60 42
Fax: +86 (0) 20 - 87 32 60 45
E-mail: guangzhou@flenderprc.com.cn

Flender Power Transmission
(Tianjin) Co. Ltd.
Chengdu Office
G-6 / F Guoxin Mansion,
77 Xiyu Street
Chengdu 610 015
Phone: +86 (0) 28 - 86 19 83 72
Fax: +86 (0) 28 - 86 19 88 10
E-mail: chengdu@flenderprc.com.cn

Flender Power Transmission
(Tianjin) Co. Ltd.
Shenyang Office
Rm. 2-163, Tower I, City Plaza Shenyan
206 Nanjing Street (N), Heping District
Shenyang 110 001
Phone: +86 (0) 24 - 23 34 20 48
Fax: +86 (0) 24 - 23 34 20 46
E-mail: shenyang@flenderprc.com.cn

Flender Power Transmission
(Tianjin) Co. Ltd.
Xi'an Office
Rm. 302, Shaanzi Zhong Da
International Mansion
30 Southern Rd.
Xi'an 710 002
Phone: +86 (0) 29 - 7 20 32 68
Fax: +86 (0) 29 - 7 20 32 04
E-mail: xian@flenderprc.com.cn

INDIA
Flender Limited
Head Office:
No. 2 St. George's Gate Road
5th Floor, Hastings
Kolkata - 700 022
Phone: +91 (0) 33 - 22 23 05 45
Fax: +91 (0) 33 - 22 23 08 30
E-mail: flender@flenderindia.com

Flender Limited
Industrial Growth Centre
Rakhajungle, Nimpura
Kharagpur - 721 302
Phone: +91 (0) 3222 - 23 33 07
Fax: +91 (0) 3222 - 23 33 64
E-mail: works@flenderindia.com

SALES OFFICES:
Flender Limited
Eastern Regional Sales Office
No. 2 St. George's Gate Road
5th Floor, Hastings
Kolkata - 700 022
Phone: +91 (0) 33 - 22 23 05 45
Fax: +91 (0) 33 - 22 23 08 30
E-mail: ero@flenderindia.com

Flender Limited
Western Regional Sales Office
Plot No. 23, Sector 19 - C
Vashi, Navi Mumbai - 400 705
Phone: +91 (0) 22 - 27 65 72 27
Fax: +91 (0) 22 - 27 65 72 28
E-mail: wro@flenderindia.com

Flender Limited
Southern Regional Sales Office
41 Nelson Manickam Road
Aminjikarai,
Chennai - 600 029
Phone: +91 (0) 44 - 23 74 39 21
Fax: +91 (0) 44 - 23 74 39 19
E-mail: sro@flenderindia.com

Flender Limited
Northern Regional Sales Office
209-A, Masjid Moth, 2nd Floor
(Behind South Extension II)
New Delhi - 110 049
Phone: +91 (0) 11 - 26 25 02 21
Fax: +91 (0) 11 - 26 25 63 72
E-mail: nro@flenderindia.com

INDONESIA
Flender Singapore Pte. Ltd.
Representative Office
Perkantoran Puri Niaga II
Jalan Puri Kencana Blok J1
No. 2i, Kembangan
Jakarta Barat 11610
Phone: +62 (0) 21 - 5 82 86 24
Fax: +62 (0) 21 - 5 82 86 23
E-mail: bobwall@cbn.net.id

IRAN
Cimaghand Co. Ltd.
P.O. Box 15745-493
No. 13, 16th East Street
Beyhaghi Ave., Argentina Sq.
Tehran 15156
Phone: +98 (0) 21 - 8 73 02 14
Fax: +98 (0) 21 - 8 73 39 70
E-mail: info@cimaghand.com

ISRAEL
Greenshpon Engineering Works Ltd.
Haamelim Street 20
P.O. Box 10108, 26110 Haifa
Phone: +972 (0) 4 - 8 72 11 87
Fax: +972 (0) 4 - 8 72 62 31
E-mail: sales@greenshpon.com
www.greenshpon.com

JAPAN
Flender Japan Co., Ltd.
WBG Marive East 21F
Nakasa 2 - 6
Mihama-ku, Chiba-shi
Chiba 261-7121
Phone: +81 (0) 43 - 2 13 39 30
Fax: +81 (0) 43 - 2 13 39 55
E-mail: contact@flender-japan.com

KOREA
Flender Ltd.
7th Fl. Dorim Bldg.
1823 Bangbae-Dong, Seocho-Ku,
Seoul 137-060
Phone: +82 (0) 2 - 34 78 63 37
Fax: +82 (0) 2 - 34 78 63 45
E-mail: flender@unitel.co.kr

KUWAIT
South Gulf Company
Al-Reqai, Plot 1, Block 96
P.O. Box 26229, Safat 13123
Phone: +965 (0) - 4 88 39 15
Fax: +965 (0) - 4 88 39 14
E-mail: adelameen@hotmail.com

LEBANON
Gabriel Acar & Fils s.a.r.l.
Dahr-el-Jamal
Zone Industrielle, Sin-el-Fil
B.P. 80484, Beyrouth
Phone: +961 (0) 1 - 49 82 72
Fax: +961 (0) 1 - 49 49 71
E-mail: gacar@beirut.com

MALAYSIA
Flender Singapore Pte. Ltd.
Representative Office
37 A - 2, Jalan PJU 1/39
Dataran Prima
47301 Petaling Jaya
Selangor Darul Ehsan
Phone: +60 (0) 3 - 78 80 42 63
Fax: +60 (0) 3 - 78 80 42 73
E-mail: flender@tm.net.my

PAKISTAN
Please refer to
A. Friedr. Flender AG
46393 Bocholt
Phone: +49 (0) 28 71 - 92 22 59
Fax: +49 (0) 28 71 - 92 15 16
E-mail: ludger.wittag@flender.com

PHILIPPINES
Flender Singapore Pte. Ltd.
Representative Office
28/F, Unit 2814
The Enterprice Centre
6766 Ayala Avenue corner
Paeso de Roxas, Makati City
Phone: +63 (0) 2 - 8 49 39 93
Fax: +63 (0) 2 - 8 49 39 17
E-mail: roman@flender.com.ph

BAHRAIN / IRAQ / JORDAN / LYBIA
OMAN / QATAR / U.A.E. / YEMEN
Please refer to A. Friedr. Flender AG
Middle East Sales Office
IMES Sanayi Sitesi
E Blok 502, Sokak No. 22
81260 Dudullu - Istanbul
Phone: +90 (0) 2 16 - 4 99 66 23
Fax: +90 (0) 2 16 - 3 64 59 13
E-mail: meso@flendertr.com

SAUDI ARABIA
South Gulf Co.
Al-Khobar, Dahran Str.
Middle East Trade Center
3rd floor, Flat # 23
P.O. Box 20434 31952 Al-Khobar
Phone: +966 (0) 3 - 8 87 53 32
Fax: +966 (0) 3 - 8 87 53 31
E-mail: adelameen@hotmail.com

SINGAPORE
Flender Singapore Pte. Ltd.
13 A, Tech Park Crescent
Singapore 637843
Phone: +65 (0) - 68 97 94 66
Fax: +65 (0) - 68 97 94 11
E-mail: flender@singnet.com.sg
www.flender.com.sg

SYRIA
Misrabi Co & Trading
Mezzeh Autostrade Transportation
Building 4/A, 5th Floor
P.O. Box 12450, Damascus
Phone: +963 (0) 11 - 6 11 67 94
Fax: +963 (0) 11 - 6 11 09 08
E-mail: ismael.misrabi@gmx.net

TAIWAN
A. Friedr. Flender AG
Taiwan Branch Company
1F, No. 5, Lane 240
Nan Yang Street, Hsichih
Taipei Hsien 221
Phone: +886 (0) 2 - 26 93 24 41
Fax: +886 (0) 2 - 26 94 36 11
E-mail: flender_tw@flender.com.tw

THAILAND
Flender Singapore Pte. Ltd.
Representative Office
23/F M Thai Tower, All Seasons Place
87 Wireless Road, Phatumwan
Bangkok 10330
Phone: +66 (0) 2 - 6 27 91 09
Fax: +66 (0) 2 - 6 27 90 01
E-mail: christian.beckers@flender.th.com

VIETNAM
Flender Singapore Pte. Ltd.
Representative Office
Suite 6/6A, 16F Saigon Tower
29 Le Duan Street, District 1
Ho Chi Minh City, Vietnam
Phone: +84 (0) 8 - 8 23 62 97
Fax: +84 (0) 8 - 8 23 62 88
E-mail: flender@hcm.vnn.vn

A U S T R A L I A

Flender (Australia) Pty. Ltd.
9 Nello Place, P.O. Box 6047
Wetherill Park
N.S.W. 2164, Sydney
Phone: +61 (0) 2 - 97 56 23 22
Fax: +61 (0) 2 - 97 56 48 92, 97 56 14 92
E-mail: sales@flender.com.au
www.flender.com.au

SALES OFFICES:
Flender (Australia) Pty. Ltd.
Suite 3, 261 Centre Rd.
Bentleigh, VIC 3204 Melbourne
Phone: +61 (0) 3 - 95 57 08 11
Fax: +61 (0) 3 - 95 57 08 22
E-mail: sales@flender.com.au

Flender (Australia) Pty. Ltd.
Suite 5, 1407 Logan Rd.
Mt. Gravatt
QLD 4122, Brisbane
Phone: +61 (0) 7 - 34 22 23 89
Fax: +61 (0) 7 - 34 22 24 03
E-mail: sales@flender.com.au

Flender (Australia) Pty. Ltd.
Suite 2 403 Great Eastern Highway
W.A. 6104, Redcliffe - Perth
Phone: +61 (0) 8 - 94 77 41 66
Fax: +61 (0) 8 - 94 77 65 11
E-mail: sales@flender.com.au

NEW ZEALAND
Please refer to Flender (Australia) Pty. Ltd.
9 Nello Place, P.O. Box 6047
Wetherill Park
N.S.W. 2164, Sydney
Phone: +61 (0) 2 - 97 56 23 22
Fax: +61 (0) 2 - 97 56 48 92
E-mail: sales@flender.com.au

12. Declaration by the manufacturer

Declaration by the manufacturer

in accordance with EC Engineering Guideline 98/37/EC, Appendix II B

We hereby declare that the

Centrifugal brakes of type **FB**
sizes 180 and 208

described in these Operating Instructions are intended for incorporation in a machine, and that it is prohibited to put them into service before verifying that the machine into which they are incorporated complies with the EC Guidelines (original edition 98/37/EC including any subsequent amendments thereto).

This Manufacturer's Declaration takes into account all the unified standards (inasmuch as they apply to our products) published by the European Commission in the Official Journal of the European Community.

Bocholt, 1997-02-24

Signature (person responible for products)

1	TROMMEL-BREMS / BRAKE DRUM	180	19	7 N 5211295	650598
8	FED-Z / TENSION SPRING	3.6X14.4X8.5	10	9 . 6045506	1259008
16	MUTTER-SKT / HEXAGON NUT	M08X1	9	D 936	340381
8	HEBEL / LEVER	180	7	9 N 5211291	650590
32	NIET-ROHR / TUBULAR RIVET	C 5X15	6	D 7338 MS	351097
4	REIBBELAG / FRICTION LINING	180	5	ITB 2919	650591
1	RING-AUSGL / SPACER	4/4 180	4	7 N 5211568	1226385
8	BLZN-ELASTAL / ELASTAL - BOLT	180 RD 20	2	9 N 5211289	1226327
1	NOCKENTEIL FB 180 / CAM PART	180	1	7 N 5220399	.
Menge No. off	Benennung Description	Kenndaten Data	Teil-Nr. Part No.	Zeichnungs-Nr. Drawing No.	Waren-Nr. Ident No.

Ausgleichbohrung: max.ø4, Radius 80
balance hole: max.ø4, radius 80
EQUILIBRAGE ALESAGE: max.ø4, RAYON 80

Schwingmetallbolzen und Hebel mit Loctite eingesetzt.
Flexible bolt and lever fitted with Loctite
BOULON FLEXIBLE ET LEVIER MONTES AVEC DU LOCTITE.

ⓒ T_A = 30 Nm
Loctite 270

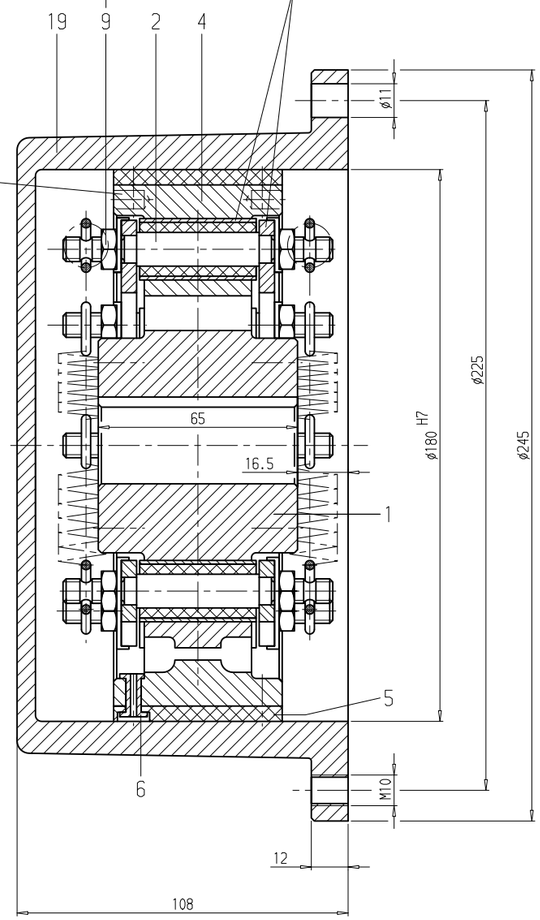

2 Bohrungen ø10 H7 um 180° versetzt zusammen mit Deckel gebohrt und gerieben.
2 Bores ø10 H7 at 180° bored and reamed together with cover.
2 ORIFICES ø10 H7 PERCES CONJOINTEMENT AVEC LE COUVERCLE EN DECALANT DE 180° ET ALESES.

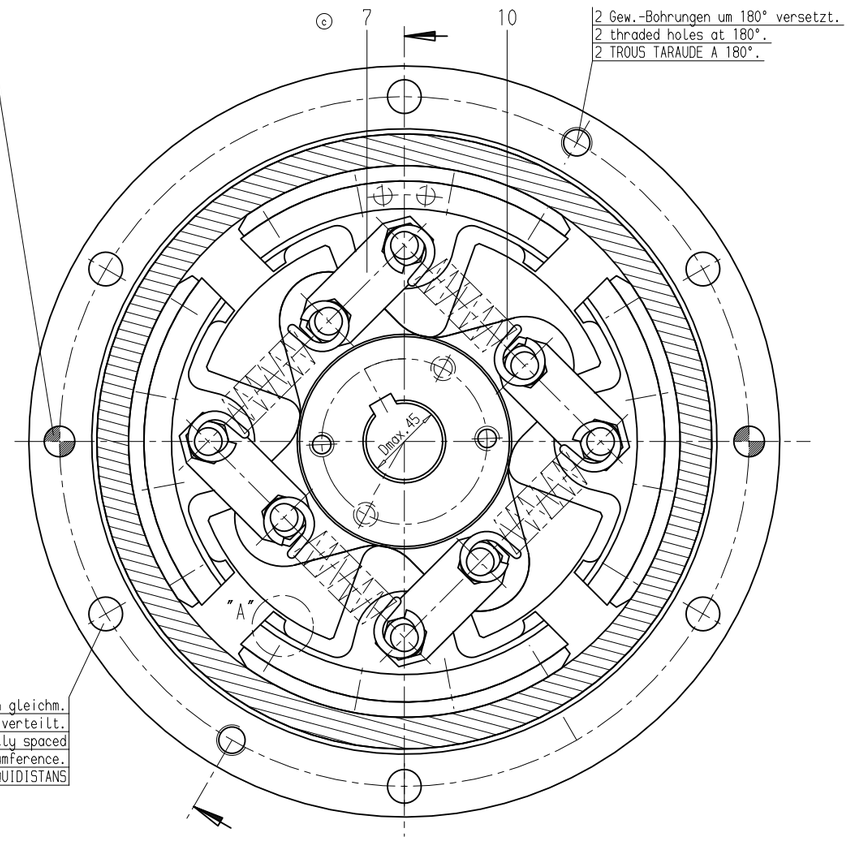

2 Gew.-Bohrungen um 180° versetzt.
2 thraded holes at 180°.
2 TROUS TARAUDE A 180°.

6 Bohrungen gleichm. am Umfang verteilt.
6 holes equally spaced on circumference.
6 ALESAGES EQUIDISTANS

Achtung Montage !!!

Anwärmen der Nockenteile (1) (max.+50°C) erleichtert ggf.das Aufziehen
Bitte beachten Sie die Betriebsanleitung BA 3000 DE

ⓑ

Attention !!!

Warming up the cam parts (1) (max.+50°C) might make the fitting easier.
Please read first the operating instructions BA 3000 EN

Bohrung D nach Auftrag
Diameter D to order
ALESAGE D SELON COMANDE
AGUJERO DE FIJACION SEGUN PEDIDE

Nut nach DIN 6885-1
Chavetero segun DIN 6885-1
Keyway acc. to DIN 6885-1
RAINURE SELON DIN 6885-1

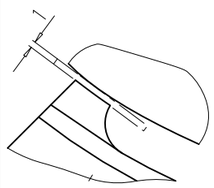

EINZELHEIT "A"
DETAIL

Bei Montage, vor dem Festziehen der Muttern Teil-Nr.9 Zwischen den Auflageflächen der Teile Nr.1 und 4 1 mm dicke Blechstreifen legen und diese nach dem Festziehen wieder entfernen. Federn Teil-Nr.10 beim Einhängen nicht überdehnen.

Place plate strip of 1 mm thickness between the faces of parts 1 and 4 tighten nuts parts 9 and remove plate strips afterwords. Take care not to strech springs part 10 unduly when fitting them.

ATTENTION FONCTIONNEMENT!
PLACER UN MORCEAU DE TOLE DE 1MM D'EPAISSEUR ENTRE LES PORTEES DES PIECES NO. 1 ET NO 4 LORS DU MONTAGE ET AVANT DESSERRER LES ECROUS NO 9 ET LA RETIRER APRES LE SERRAGE. NE PAS EXCESSIVEMENT ALLONGER LES RESSORTS NO 10 LORS DE L'ACCROCHAGE!

Bremsrichtung entgegen der Betriebsrichtung
Direction of braking opposite direction of ratation
LE SENS DE ROTATION AU FREINAGE EST A L'INVERS DU SENS DE ROTATION EN FONCTIONNEMENT

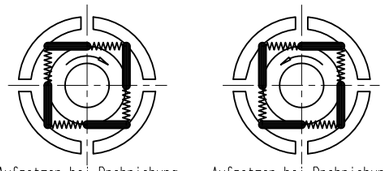

Aufsetzen bei Drehrichung rechts 1)
brake mounting for clock-wise rotation 1)
MONTAGE EN CAS DE SENS DE ROTATION HORAIRE 1)

Aufsetzen bei Drehrichung links 1)
brake mounting for counter clockwiese ratation 1)
MONTAGE EN CAS DE SENS DE ROTATION ANTI-HORAIRE 1)

1) Auf den Wellenspiegel der Welle gesehen auf der die Bremse aufgesetzt wird
1) Viewed in direction of end face of saft on which brake is to be mounted
1) EN VUE SUR LA FACE DE L'ARBRE SUR LEQUEL LE FREIN EST MONTE.

Leerlaufdrehzahl n = 1500 1/min
Idling speed
VITESSE DE ROTATION A VIDE

ⓔ

Die Auswuchtdrehzahl darf 1100 1/min nicht überschreiten. Innenteile (Teile 1-10) zusammengebaut. Auswuchtüte Q6.3 ; zul. Rest-unwucht je Ebene 1.4 g. Vor dem Nuten gewuchtet.	El numero de revoluciones equilibrado, no debe sobrepasar los 1100 1/min. Piezas interiores (1-10) montados. Nivel de la calidad equilibrado Q6.3 ; desequilibrado residual admisible en cada plano 1.4 g. Equilibrado antes de realizar el chavetero.	Balancing speed may not exceed 1100 1/min. Internal parts (part-no. 1-10) balancing after assembly. Balancing quality Q6.3 ; allowable out of balance weight 1.4 g. Keyway is to be cut after balancing.

Äl	Feld	Änderungsbeschreibung	Datum	Name	
f	.	Wuchtstempel korrigiert	2004-06-04	DFJ	. 2004-06-04
e	H4, B12	E-Liste korrigiert, Wuchtstempel geändert	2004-02-12	VIN	VIN 2004-02-12
d	H4	Ersatzteilliste richtiggestellt	2003-01-10	KHM	HEG 2003-01-10
c	3xc	Teil 8 entfernt, Text TA = 30Nm, Loctite 270 und E-Liste hinzu	2001-08-17	KHM	HEG 2001-09-11
b	E3	Stempel hinzu	2001-04-24	TBG	HEG 2001-04-24
a	.	Zeichnung überarbeitet	2001-04-17	TBG	HEG 2001-04-17
					23. 3.93

Zul. Abweichungen für Maße ohne Tol.-Angaben: mittel DIN 7168 | Auftr.-Nr. . | gesichert

FLENDER

Werkstoff /-Nr. .

Nicht gekennzeichnete Oberflächen: .

Rauhwerte Ra in µm

	Abt.	Datum	Name
Gez.	KSA	16.03.93	ROSS
Gepr.	KSA	16.03.93	VOECKING
Norm	KSA	16.03.93	VOECKING

Basis-Nr. | Äl | Ä | Anz. | Teil
Modell-Nr.

Maßstab 1:1
Trägheitsmoment J (kgm²) .
Gewicht (kg) 17

Benennung
BREMS-FLIEHKRAFT
Schl.-Nr.: 0674
FB 180-1 ohne WDR / n = 1500 1/min
Rohteil nach Zeichnung . | sonst nach Zeichnung .

Format Art Zeichnungs-Nr. Äl
6 . 5 273 774 f
Ersatz für . | Aus Zchng. 5 240 171

Allgemeintoleranz ISO 16016 beachten

379428

PLOTT-DATUM: 05-MAY-2006 13:07:27 Fr.Tiebing/PZ6

FLENDER	**Stückliste (SL)** Parts list	**Bauart** **FB** Type **Größe** **180,0** Size **Übersetzung** ratio	**Seite** Page 1/1

Bei Korrespondenz bitte angeben
Please quote in correspondence **SL 4190294-280 DE/EN**

Hierzu gehört Zeichnungs-Nr.
Please refer to DWG No. **5273774**

	Teil-Nr. Part No.	Menge No. off		Benennung Description			Zeichnungs-Nr. Drawings No.	Material-Nr. Ident no.	Gw(kg) Weight
E	0001	1	ST	FB NOCKENTEIL VARI FB CAM PART VARI				000.009.900.192	
E*	0001	1	ST	NOCKENTEIL FB180 UNGEBOHRT CAM PART FB180 UNGEBOHRT EN-JS1030		EN-JS1030	5220399/I	000.001.226.326	2,8
E	0002	8	ST	BLZN-ELASTAL FB180 RD20 ELASTAL-BOLT FB180 RD20 115CrV3		115CrV3	*****	000.001.226.327	0,1
G	0004	1	ST	RING-AUSGL 4/4 FB180 SPACER 4/4 FB180 EN-JL1040		EN-JL1040	5211568/H	000.001.226.385	2,1
E	0005	4	ST	REIBBELAG FB 180 FRICTION LINING FB 180 5022 SH		5022 SH		000.000.650.591	0,0
E	0006	32	ST	NIET-ROHR C 5X15 TUBULAR RIVET C 5X15 D 7338 MS	D 7338	MS		000.000.351.097	0,1
E	0007	8	ST	HEBEL FB 180 LEVER FB 180 S235JRG2C		S235JRG2C	5211291/F	000.000.650.590	0,1
E	0009	16	ST	MUTTER-SKT M08X1 HEXAGON NUT M08X1 D 936 22H	D 936	22H		000.000.340.381	0,1
E	0010	8	ST	FED-Z 3,6X14,4x8,5 TENSION SPRING 3,6X14,4x8,5 1.4310		1.4310	6045506/-	000.001.259.008	37,0

Die mit * gekennzeichneten Teile gehören zu einer Baugruppe (G). Die Baugruppe ist nur komplett auszutauschen.
The parts marked with * belong to a subassembly (G). The subassemblymust be replaced complete.

A. Friedr.Flender AG, D 46393 Bocholt,
Tel.+ 49(0)2871/92-0, Fax+ 49(0)2871/922596, http://www.flender.com

Datum Date	TIEBING, STEFANIE	2691
09.05.2006	Rev.:	

405 520 GB

Lenze

Operating Instructions

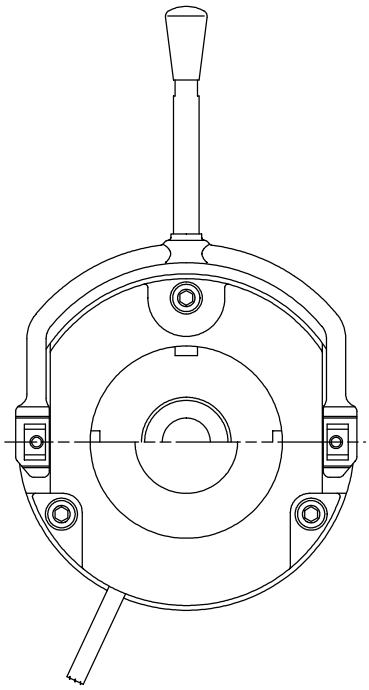

KL458-004-a

Spring-operated brake with electromagnetic release

Type BFK458- □□□

381/428

Product key

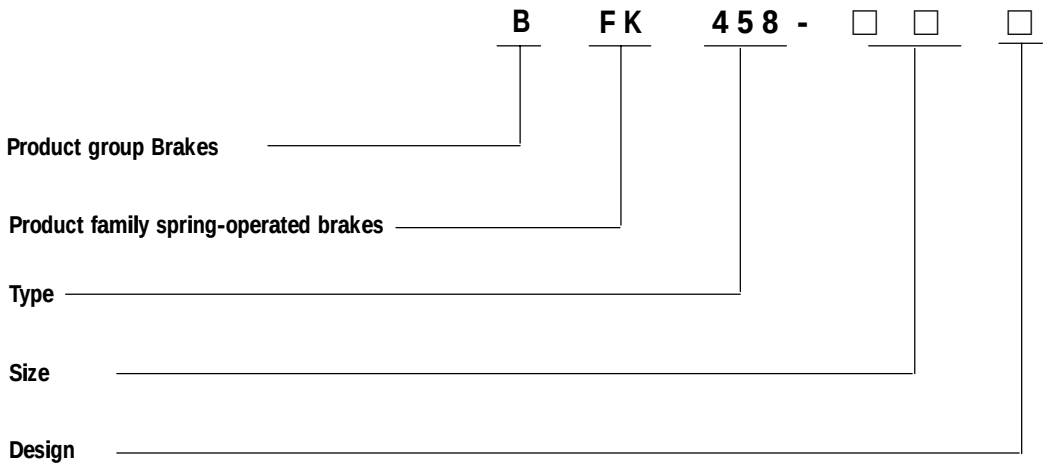

Size
06, 08, 10, 12, 14, 16,
18, 20, 25

Stator design
E - adjustable (brake torque can be reduced via adjuster nut)
N - not adjustable

Uncoded:
Supply voltage, hub bore, options

- The data indicated in the product key and on the nameplate and stickers on the packaging are valid for spring-operated brakes of the series BFK458.

These Operating Instructions are valid for the following spring-operated brakes:

BFK458-06□
BFK458-08□
BFK458-10□
BFK458-12□
BFK458-14□
BFK458-16□
BFK458-18□
BFK458-20□
BFK458-25□

BA 14.0168
Author: Lenze GmbH & Co KG Bremsen
2nd edition: 05/00

Nameplate

Layout

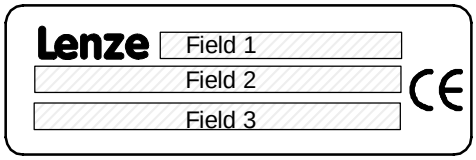

Sizes 06-16 and 18-25

Field	Content			Example: Size 06-16
1	Manufacturer	Brake type	Type no.	Lenze -D BFK458-06E Nr.519508
2	Rated voltage	Rated power	Rated brake torque/CE mark	205V DC 20W 4.0NM CE
3			Date of manufacture	80515
Field	**Content**			**Example: Size 18-25**
1	Manufacturer			Lenze D - AERZEN
2	Brake type			Typ: BFK458-25E
3	Rated voltage	Rated power		205V DC 110W
4	Rated brake torque		Date of manufacture	400NM 80515
5	Type no.		CE mark	Nr. 521388 CE

Packaging sticker

Layout

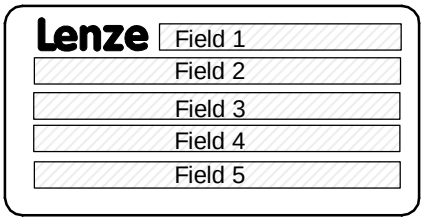

Assembly

Field	Content			Example
1	Manufacturer		Barcode of No.	Lenze D - AERZEN
2	Name		Type no.	MAGNETTEIL KPL. Nr. 519508
3	Type see Product Key	Rated brake torque	No. per box	Typ: BFK458-06E 4,0NM 1 Stück
4	Rated voltage / rated power		Packaging date	205V DC 20W 80515 CE
5	Addition / CE mark			Rostschutzverpackung-Reibflächen fettfrei halten!

Contents

1 Preface and general information 6

1.1 How to use these Operating Instructions 6
1.1.1 Terminology used 6
1.2 Scope of delivery 6
1.3 Lenze drive systems 7
1.3.1 Labelling 7
1.3.2 Application as directed 7
1.3.3 Legal regulations 7

2 Safety information 9

2.1 Persons responsible for the safety 9
2.2 General safety information 10
2.3 Layout of the safety information 11

3 Technical data 12

3.1 Product description 12
3.1.1 General 12
3.1.2 Braking 13
3.1.3 Brake release 13
3.1.4 Decreasing brake torque 13
3.1.5 Manual hand release (optional) 13
3.1.6 Microswitch (optional) 13
3.1.7 Encapsulated design (optional) 13
3.2 Brake torques 14
3.2.1 Basic module E, brake torque reduction 14
3.2.2 Brake torques depending on the speed and permissible limit speeds 15
3.3 Rated data 16
3.3.1 Coil voltage / Coil resistance 17
3.4 Switching times 19
3.5 Operating frequency / friction work 20
3.6 Emission 21

4 Installation 22

4.1 Required tools 22
4.2 Assembly 23
4.2.1 Preparation 23
4.3 Installation 23
4.3.1 Installation of the hub onto the shaft 23
4.3.2 Installation of the brake 24
4.3.3 Assembly of the friction plate sizes 06 to 16 26
4.3.4 Assembly of the flange 26
4.3.5 Assembly of the cover seal 27
4.3.6 Assembly of the manual release sizes 06 to 14 28
4.3.7 Assembly of the manual release sizes 16 to 25 28
4.4 Electrical connection 29

5 Commissioning and operation 33
5.1 Operational test 33
5.1.1 Release / voltage check 33
5.1.2 Microswitch - release check 34
5.1.3 Microswitch - wear check 34
5.1.4 Manual release 35
5.2 Decreasing brake torque (only for stators type E) 36
5.3 During operation 36
6 Maintenance / repair 37
6.1 Inspection intervals 37
6.2 Inspections 37
6.2.1 Rotor thickness 37
6.2.2 Air gap 37
6.2.3 Releasing / voltage 38
6.3 Maintenance 38
6.3.1 Readjustment of air gap 38
6.3.2 Exchange rotor 39
6.4 Spare-parts list 39
6.4.1 Spare parts list for sizes 06 to 16 40
6.4.2 Spare parts list for sizes 18 to 25 41
6.4 Order of spare parts 43
7 Troubleshooting and fault elimination 45
Declaration of Conformity / Manufacturer's Certification
Service addresses

1 Preface and general information

1.1 How to use these Operating Instructions

- These Operating Instructions are intended for safety-relevant operations on and with the spring-operated brake with electromagnetic release. They contain safety instructions, which must be observed.
- All personnel working on and with the spring-operated brake with electromagnetic release must have the Operating Instructions available and observe the information and notes relevant for them.
- The Operating Instructions must always be in a complete and perfectly readable state.

1.1.1 Terminology used

Brake

In the following text, the term ”spring-operated brake” is used for ”spring-operated brake with electromagnetic release”.

Drive system

For drive systems with spring-operated brake with electromagnetic release and other Lenze drive components the term ”drive system” will be used in the following text.

1.2 Scope of delivery

- The drive systems are combined individually according to a modular design. The scope of delivery is indicated in the accompanying papers.
- After receipt of the delivery, check immediately whether it corresponds to the accompanying papers. Lenze does not grant any warranty for deficiencies claimed subsequently. Claim
  - visible transport damage immediately to the forwarder.
  - visible deficiencies / incompleteness immediately to the responsible Lenze subsidiary / agency.

1.3 Lenze drive systems

1.3.1 Labelling

- Lenze drive systems and components are uniquely designated by the content of their nameplates.
- Manufacturer:
  Lenze GmbH & Co KG Bremsen
  Postfach 10 13 52
  D-31763 Hameln

  Site:
  Wülmser Weg 5
  D-31855 Aerzen
- The spring-operated brake BFK458-□□□ is also available as individual components. The user can build up the system as required. The following indications: packaging sticker, nameplate, and type code are valid for the spring-operated brake.
- When delivering single components, the labelling is missing!

1.3.2 Application as directed

- Lenze drive systems
  - are intended for use in machinery and systems.
  - must only be used for the purposes ordered and confirmed.
  - must only be operated under the ambient conditions prescribed in these Operating Instructions.
  - must not be operated beyond their corresponding power limits.

Any other use shall be deemed inappropriate!

1.3.3 Legal regulations

Liability

- The information, data, and notes in these Operating Instructions met the state of the art at the time of printing. Claims referring to drive systems which have already been supplied cannot be derived from the information, illustrations, and descriptions.
- We do not accept any liability for damage or operating interference caused by:
  - inappropriate use
  - unauthorized modifications to the drive system
  - improper working on and with the drive system
  - operating faults
  - disregarding these Operating Instructions

Warranty

- Conditions of warranty: see terms of sale and delivery of Lenze GmbH & Co KG.
- Warranty claims must be made immediately after detecting defects or faults.
- The warranty is void where liability claims cannot also be made.

2 Safety information

2.1 Persons responsible for the safety

Operator

- An operator is any natural or legal person who uses the drive system or on behalf of whom the spring-operated brake is used.
- The operator or his safety officer are obliged
  - to check whether all relevant regulations, notes, and laws are observed,
  - that only qualified personnel work on and with the drive system,
  - to ensure that the personnel have the Operating Instructions available for all corresponding operations and
  - to prohibit non-qualified personnel from working with and on the spring-operated brake.

Qualified personnel

Qualified personnel are persons who - because of their education, experience, instructions, and knowledge about the corresponding standards and regulations, rules for the prevention of accidents, and operating conditions - are authorized by the persons responsible for the safety of the plant to perform the required actions and who are able to recognize the potential hazards.
(see IEC 364, definition for qualified personnel)

2.2 General safety information

- These safety notes do not claim to be complete. In case of questions and problems please contact your Lenze representative.
- At the time of supply the spring-operated brake is state-of-the-art and ensures basically safe operation.
- The spring-operated brake is hazardous to persons, the spring-operated brake itself and other properties of the operator, if
  - non-qualified personnel work on and with the spring-operated brake.
  - the spring-operated brake is used improperly.
- The spring-operated brakes must be designed such that they perform their functions after proper installation and with application as directed in fault-free operation and that they do not cause hazards for persons. This also applies to the interaction with the whole system.
- The spring-operated brake must only be operated in a perfect state.
- Retrofittings or changes of the spring-operated brake are generally prohibited. In any case, Lenze must be contacted.
- The friction linings must be carefully protected from grease or oil since even small amounts of lubricants reduce the brake torque considerably.
- With application conditions according to enclosure IP54, the brake torque will usually not be reduced. Because of the multitude of possible applications, proper function of the mechanical components must be tested under the specific application conditions.

Possible applications of the spring-operated brake BFK458-□□□:

- No explosive or aggressive atmosphere.
- Humidity, no restriction.
- Ambient temperature -20°C to +40 °C.
- With high humidity and low temperatures
  - Take measures to protect armature plate and rotor from freezing.
- Electrical connections must be protected against contact.
- Cooling-air flow must not be impeded.
- In reverse operation it is recommended to additionally glue the hub to the shaft.

2.3 Layout of the safety information

- All safety information given in these Operating Instructions has the same layout:

Signal word
Note

- The icon characterizes the type of danger.
- The signal word characterizes the severity of danger.
- The note text describes the danger and gives information how to prevent dangerous situations.

Warning of damage to persons

Icons used		Signal words	
	Warning of hazardous electrical voltage	**Danger!**	Warns of **impending danger** . Consequences if disregarded: Death or severe injuries.
		Warning!	Warns of **potential, very hazardous situations**. Possible consequences if disregarded: Death or severe injuries.
	Warning of a general danger	**Caution!**	Warns of **potential, hazardous situations**. Possible consequences if disregarded: Light or minor injuries.

Warning of material damage

Icons used	Signal words	
STOP	**Stop!**	Warns of **potential damage to material**. Possible consequences if disregarded: Damage of the controller/drive system or its environment .

Other notes

Icons used	Signal words	
	Note!	Designates a general, useful note. If you observe it, handling of the drive system/device is made easier.

3 Technical data

3.1 Product description

1	Armature plate
2	Compression springs
3	Rotor
4	Hub
5	Shaft
6	Flange
7	Stator
8	Adjuster nut
9	Threaded sleeves
	$s_{Lü}$ = Air gap

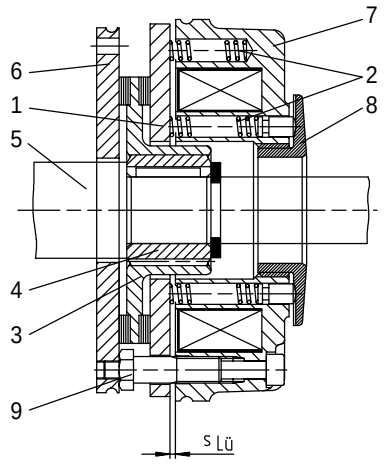

FIG 1 Design of the spring-operated brake BFK458: basic module E (complete stator) + rotor + hub + flange

1	Armature plate
2	Compression springs
3	Rotor
4	Hub
7	Stator
9	Threaded sleeves
	$s_{Lü}$ = Air gap

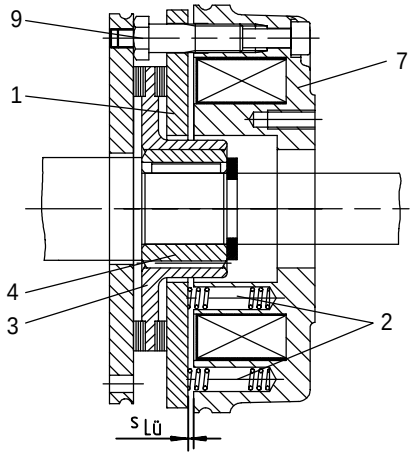

FIG 2 Design of the spring-operated brake BFK458: basic module N (complete stator) + rotor + hub + flange

3.1.1 General

The spring-operated brake type BFK458-□□□ is a single disc brake with two friction surfaces. The brake torque is generated by several compression springs (2) by friction. The brake is released electromagnetically.

The spring-operated brake type BFK458-□□□ is designed for the conversion of mechanical work and kinetic energy into heat. For operating speed see chapter 3.3 Rated data. Due to the static brake torque, the brake can hold loads without speed difference. Emergency braking is possible at high speed, see chapter 3.3 Rated data. The more friction work, the higher the wear.

3.1.2 Braking

During braking, the rotor (4), which is axially movable on the hub (3), is pressed against the friction surface - via the armature plate (1) - by means of inner and outer springs (2). The asbestos-free friction linings ensure a high brake torque with low wear. The brake torque is transmitted between hub (4) and rotor (3) via the splines.

3.1.3 Brake release

In braked state, there is an air gap $s_{Lü}$ between stator (7) and armature plate (1). To release the brake, the stator coil (7) is excited with the DC voltage provided. The magnetic force generated attracts the armature plate (1) towards the stator (7) against the spring force. The rotor (3) is then released and can rotate freely.

3.1.4 Decreasing brake torque

For basic module E (adjustable) the spring force and thus the brake torque can be reduced by unscrewing the adjuster nut (8) (see chapter 5.2).

3.1.5 Manual hand release (optional)

The manual hand release is optionally available for short-term releases when no voltage is applied. The manual hand release can be retrofitted.

3.1.6 Microswitch (optional)

The manufacturer offers the microswitch for air-gap or wear monitoring. The user must provide the corresponding electrical connection (see chapter 4.4).

When air-gap monitoring, the motor does not start before the brake has been released. With this set-up, all possible faults are monitored. For example, in the event of defective rectifiers, interrupted connection cables, defective coils, or excessive air gaps the motor will not start.

When checking the wear, no current will be applied to the brake and the motor if the air gap is too large.

3.1.7 Encapsulated design (optional)

This design not only avoids the penetration of spray water and dust but also the spreading of abrasion particles outside the brake. This is achieved by:

- a cover seal over the armature plate and rotor,
- a cover in the adjuster nut,
- a shaft seal in the adjuster nut for continuous shafts (option).

3.2 Brake torques

Size	06	08	10	12	14	16	18	20	25
Rated torques [Nm], referring to the relative speed Δn = 100 min^{-1}	2 N/E	3.5 N/E	7 N/E	14 N/E	25 N/E	35 N/E	65 N/E	80 E	175 N/E
	2.5 N/E	4 E	9 N/E	18 N/E	35 N	45 N/E	80 N/E	115 N/E	220 N
	3 N/E	5 N/E	11 N/E	23 N/E	40 N/E	55 N/E	100 N/E	145 N/E	265 N/E
	3.5 N/E	6 N/E	14 N/E	27 N/E	45 N/E	60 N/E	115 N/E	170 N/E	300 N/E
	---	7 N/E	---	---	55 N/E	70 N/E	130 N/E	200 N/E	350 N/E
	---	---	---	---	---	---	---	230 N/E	---
	4 N/E	8 N/E	16 N/E	32 N/E	60 N/E	80 N/E	150 N/E	260 N/E	400 N/E
	4.5 N/E	9 N/E	18 N/E	36 N/E	65 N/E	90 N/E	165 N/E	290 N/E	445 N/E
	5 E	10 E	20 E	40 E	75 N/E	100 N/E	185 N/E	315 N/E	490 N/E
	5.5 E	11 E	23 N/E	46 N/E	80 N/E	105 N/E	200 N/E	345 N/E	530 E
	6 N/E	12 N/E	---	---	95 N/E	125 N/E	235 N/E	400 N/E	600 E

TAB 1 N.....Brake torque for module N (without adjuster nut)
E.....Brake torque for module E (with adjuster nut)

Holding brake with emergency stop operation ($s_{Lümax}$ ca. 1.5 x $s_{Lürated}$)

Operating brake ($s_{Lümax}$ ca. 2.5 x $s_{Lürated}$)

Standard brake torque

3.2.1 Basic module E, brake torque reduction

For basic module E the brake torque can be reduced by means of the adjuster nut in the stator. The adjuster nut may only be screwed out up to the maximum projection $h_{1max.}$ (see chapter 3.3).

Size	06	08	10	12	14	16	18	20	25
Torque reduction per detent position [Nm]	0.2	0.35	0.8	1.3	1.7	1.6	3.6	5.6	6.2

TAB 2

Stop!
Take into consideration that engagement times and disengagement times change depending on the brake torque.

3.2.2 Brake torques depending on the speed and permissible limit speeds

Type	Brake torque rated value at Δn = 100 min^{-1} [%]	Brake torque at Δn_0 [min^{-1}] [%]			max. speed Δn_{0max} [min^{-1}]
		1500	3000	max. horizontal	
BFK458-06	100	87	80	65	12400
BFK458-08		85	78	66	10100
BFK458-10		83	76		8300
BFK458-12		81	74		6700
BFK458-14		80	73	67	6000
BFK458-16		79	72	66	5300
BFK458-18		77	70		4400
BFK458-20		75	68		3700
BFK458-25		73			3000

TAB 3

3.3 Rated data

Type	$s_{Lürated}$ + 0.1mm - 0.05mm [mm]	$s_{Lü}$ max. operating brake [mm]	$s_{Lü}$ max. holding brake [mm]	max. adjust-ment, admis-sible wear [mm]	Rotor thick-ness [mm] min. 1)	Rotor thick-ness [mm] max.	Excess of the adjuster nut h_{1max} (see fig. 18 page 36) [mm]	Pitch circle 4 [mm]	Pitch circle Thread	Screws for flange in-stallation DIN 6912 2)	Minimum depth of the clearing holes (installation flange) [mm]	Tightening torque Screws [Nm]	Tightening torque Lever com-plete [Nm]	Weight of stator complete [kg]
BFK458-06	0.2	0.5	0.3	1.5	4.5	6.0	4.5	72	3 x M4	3 x M4	0.5	2.8	2.8	0.75
BFK458-08					5.5	7.0		90	3 x M5	3 x M5	1	5.5		1.2
BFK458-10					7.5	9.0	7.5	112	3 x M6	3 x M6	2	9.5	4.8	2.1
BFK458-12	0.3	0.75	0.45	2.0	8.0	10.0	9.5	132	3 x M6	3 x M6	3			3.5
BFK458-14				2.5	7.5		11	145	3 x M8	3 x M8	1.5	23	12	5.2
BFK458-16				3.5	8.0	11.5	10	170	3 x M8	3 x M8	0.5			7.9
BFK458-18	0.4	1.0	0.6	3.0	10.0	13.0	15	196	6 x M8	4 x M8 3)	0.8		23	12.0
BFK458-20				4.0	12.0	16.0	17	230	6 x M10	4 x M10 3)	2.1	46		19.3
BFK458-25	0.5	1.25	0.75	4.5	15.5	20.0	19.5	278	6 x M10	6 x M10	5		40	29.1

1) The friction lining is designed such that the brake can be adjusted at least 5 times.

2) The screw length depends on the material and the thickness of the customer's mounting place.

3) The thread in the threading surface is offset by 30° in reference to the center axle of the manual release lever.

3.3.1 Coil voltage / Coil resistance

Type	Electrical Power P_{20} [W] 1)	Voltage U [V]	Coil resistance $R_{20} \pm 8\%$ [Ω]
BFK458-06	20	24	20
		96	460.8
		103	530.5
		170	1445
		180	1620
		190	1805
		205	2101
BFK458-08	25	24	23
		96	368
		103	424.4
		170	1156
		180	1296
		190	1444
		205	1681
BFK458-10	30	24	19.2
	31	96	297.3
	32	103	331.5
	30	170	963.3
	32	180	1013
	30	190	1203
	33	205	1273
BFK458-12	40	24	14.4
		96	230.4
		103	265.2
		170	722.5
		180	810
		190	902.5
		205	1051
BFK458-14	50	24	11.5
		96	184.3
	53	103	200.2
	50	170	578
	53	180	611.3
	50	190	722
	53	205	792.9

1) Coil power at 20°C

Type	Electrical Power P_{20} [W] 1)	Voltage U [V]	Coil resistance $R_{20} \pm 8\%$ [Ω]
BFK458-16	55	24	10.5
		96	167.6
	56	103	189.5
	55	170	525.5
		180	589.1
	60	190	601.7
	56	205	750.5
BFK458-18	85	24	6.8
		96	108.4
		103	124.8
		170	340
		180	387.2
		190	424.7
		205	494.4
BFK458-20	100	24	5.76
		96	92.2
		103	106.1
		170	289
		180	324
	110	190	328.2
	100	205	420.3
BFK458-25	110	24	5.24
		96	83.8
		103	96.5
		170	262.7
		180	294.6
		190	328.2
		205	382.1

1) Coil power at 20 °C

3.4 Switching times

t_1	Engagement time
t_2	Disenganement time (up to M = 0.1 M_r)
t_{11}	Reaction delay during engagement
t_{12}	Torque rise time of the brake torque

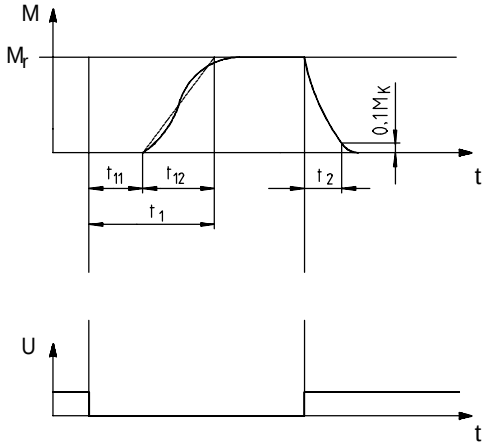

FIG 3 Switching times

Type	Brake torque rated value at Δn = 100 min^{-1} M_r 1)	Maximum permissible friction work per operation only Q_E	Transition operating frequency $s_{hü}$	Operating time [ms] for $s_{Lürated}$			
				Engaging DC-switching			Disengaging
	[Nm]	[J]	[h^{-1}]	t_{11}	t_{12}	t_1	t_2
BFK458-06	4	3000	79	15	13	28	45
BFK458-08	8	7500	50	15	16	31	57
BFK458-10	16	12000	40	28	19	47	76
BFK458-12	32	24000	30	28	25	53	115
BFK458-14	60	30000	28	17	25	42	210
BFK458-16	80	36000	27	27	30	57	220
BFK458-18	150	60000	20	33	45	78	270
BFK458-20	260	80000	19	65	100	165	340
BFK458-25	400	120000	15	110	120	230	390

TAB 4 1) Minimum brake torque when all components are run in.

The transitions from the state without brake torque to the steady brake torque is not without delay. The engagement times are valid for switching on the DC side with an induction voltage of approx. 5 to 10 times nominal voltage. The chart shows the delay during engagement t_{11}, the rise time of the brake torque t_{12} and the engagement time $t_1 = t_{11} + t_{12}$, as well as the disengagement time t_2.

Disengagement time:

The disengagement time is not influenced by DC or AC switching operations. It can only be shortened by special equipment for fast-response excitation or overexcitation.

Engagement time

With switching on the AC side, the engagement times are prolonged extremely. The change is approx. by the factor 6-10, for connection see FIG 13.

The most simple connection of rectifier and brake directly in parallel to the motor winding additionally prolongs the engagement time because the motor, which is already switched off but still running continues to excite the brake (for connection see FIG 12).

Spark suppressors for the rated voltages, which are to connected in parallel to the contact are available for engagement on the DC side. If this is not admissible for safety reasons, e. g. with hoists and lifts, the spark suppressor can also be connected in parallel to the brake coil (for connection see FIG 14).

A reduction of the brake torque via the adjuster nut prolongs the engagement time and reduces the disengagement time. If the prolongation is too long, an anti-magnetic plate - to be assembled between stator and armature plate - is available. The plate reduces the engagement time and prolongs the disengagement time.

3.5 Operating frequency / friction work

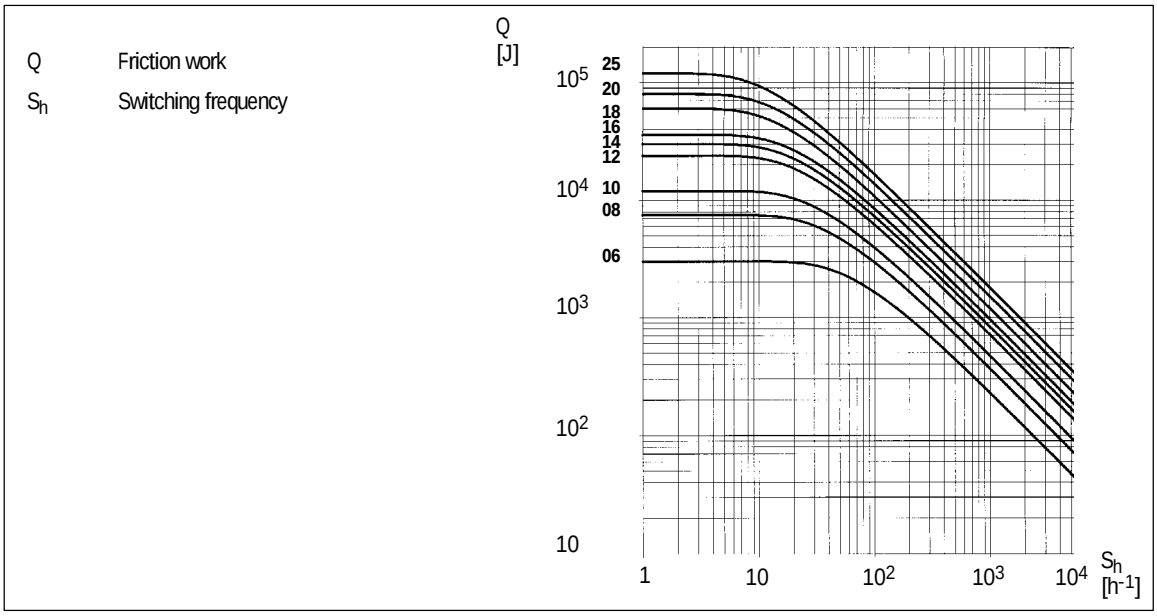

FIG 4 Friction work as function of the operating frequency, (sizes 06-25)

$$S_{hzul} = \frac{-S_{hü}}{\ln\left(1-\frac{Q}{Q_E}\right)} \qquad Q_{zul} = Q_E\left(1 - e^{\frac{-S_{hü}}{S_h}}\right)$$

The permissible operating frequency S_{hperm} depends on the friction work Q (see FIG 4). An operating frequency of S_h results in the permissible friction work Q.

With high speed and friction work, the wear increases strongly, because very high temperatures occur at the friction faces for a short time.

3.6 Emission

Electromagnetic compatibility

Under normal switching conditions with an unfiltered DC voltage via a bridge circuit the spring-operated brake type BFK458-□□□ complies with the EMC standard EN50081 part 1.

Please note, that the entire circuit only complies with the EMC Directive, if it is configured according to one of the following possibilities:

Circuit:		With a rectifier that: complies with standard	With a rectifier that: does not comply with standard	Spark suppressor in parallel to AC voltage	Mains filters
DC switching	< = 5 Switching operations / minute	●			
			●	●	
	> 5 Switching operations / minute	●			●
			●		●
AC switching	< = 5 Switching operations / minute	●			
			●	●	
	> 5 Switching operations / minute	●			
			●	●	

Spark suppressors according to coil voltage on request.

Heat

Since the brake converts kinetic energy as well as mechanical and electrical energy into heat, the surface temperature varies considerably, depending on the operating conditions and the possible heat dissipation. Under unfavorable conditions, the surface temperature can reach 130 °C.

Noises

The switching noises during engagement and disengagement depend on the air gap $s_{Lü}$ and the brake size.

Depending on the natural oscillation after installation, operating conditions and state of the friction faces, the brake may squeak during braking.

Others

The abrasion of the friction parts produces dust.

With large loads, the friction face heats up so strongly, that odors may occur.

4 Installation

Warnung!
Toothed hub or screws must not be lubricated with grease or oil.

4.1 Required tools

Type	Torque wrench [Nm]	Insertion for hexagon socket screws Wrench size [mm] *	Wrench Wrench size [mm] Cap screws	Wrench Wrench size [mm] Manual release Nuts / bolts	Wrench Wrench size [mm] Manual release 2kt lever	Hook wrench DIN1810 Design A for Diameter [mm]	Box spanner for flange installation, outside Wrench size [mm]
BFK458-06	1 to 12	3x1/4" square	8	7 / 5.5	7	45 - 55	7x1/4" square
BFK458-08		4x1/4" square	9	10 / 7		52 - 55	8x1/4" square
BFK458-10		5x1/4" square	12			68 - 75	10x1/4" square
BFK458-12						80 - 90	
BFK458-14	20 to 100	6x1/2" square	15	12 / 8	9		13x1/2" square
BFK458-16						95 - 100	
BFK458-18				- / 10	10	110 - 115	
BFK458-20		8x1/2" square	17		12	135 - 145	17x1/2" square
BFK458-25					14	155 - 165	

* for flange mounting insertion with journal guide

Feeler gauge	Caliper gauge	Multimeter

4.2 Assembly

4.2.1 Preparation

1. Unpack spring-operated brake.
2. Check for completeness
3. Check nameplate data, especially rated voltage.

4.3 Installation

- When you have ordered a version with manual release, friction plate, or flange, attach these units first.

4.3.1 Installation of the hub onto the shaft

4	Hub
4.1	Circlip
15	Endshield

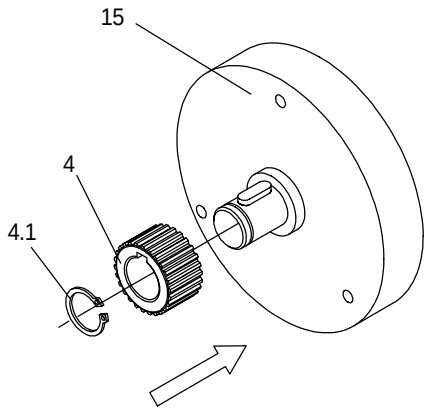

FIG 5 Installation of the hub onto the shaft

1. Press hub (4) onto the shaft.
2. Secure hub against axial displacement, e.g. using a circlip (4.1).

Stop!
In reverse operation it is recommended to additionally glue the hub to the shaft.

4.3.2 Installation of the brake

Stop!

- When dimensioning the thread depth in the endshield you must consider the permissible wear (see chapter 3.3).
- Check the condition of the endshield (15). It must be free of oil and grease.

3	Rotor
4	Hub
15	Endshield

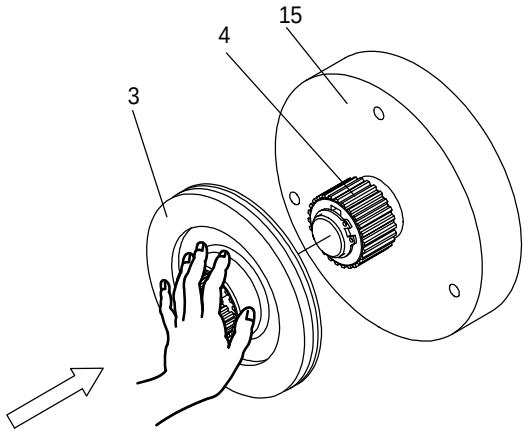

FIG 6 Assembly of the brake

1. Push the rotor (3) onto the hub (4) and check whether it can be moved by hand (FIG 6).

Stop!
Please note the following in the adjuster nut for versions with shaft seal:

2. Lightly lubricate the lip of the shaft seal with grease.
3. When assembling the stator push the shaft seal carefully over the shaft.

- The shaft should be located concentrically to the shaft seal.

7	Stator complete
10	Allen screw
11	Clip
15	Endshield

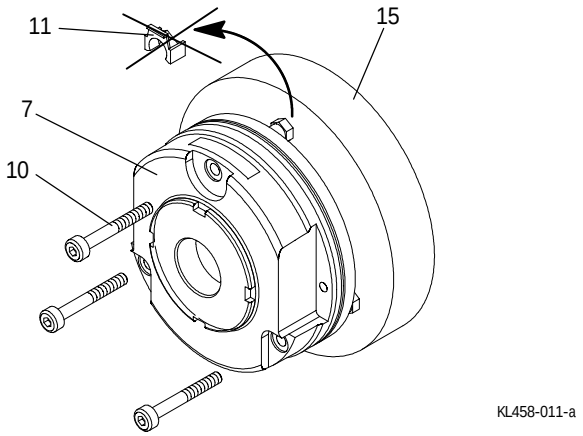

FIG 7

4. Screw the complete stator (7) onto the endshield (15) using the screws (10) (FIG 7).
5. Remove the clips (11) (throw away; FIG 7).

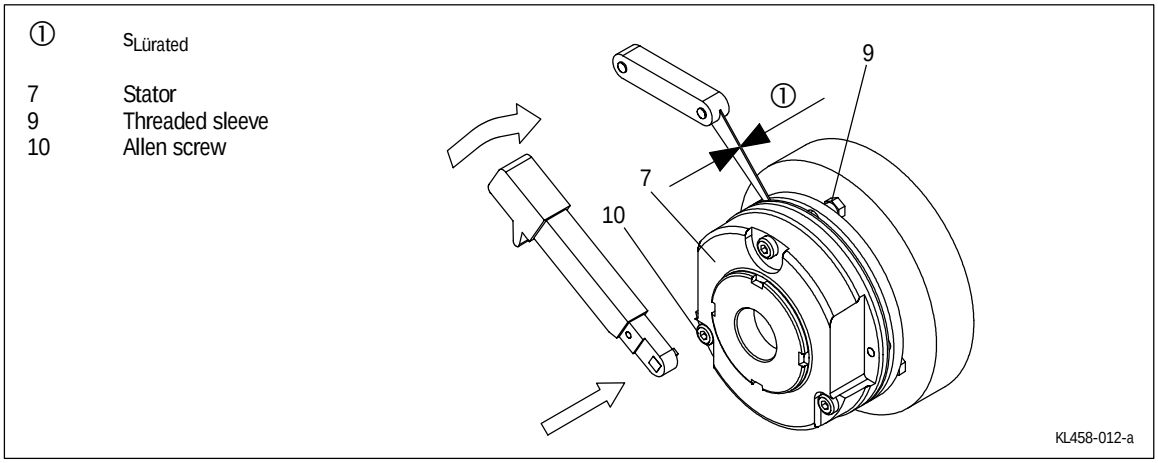

FIG 8

6. Tighten the screws (10) evenly (for torques see rated data table chapter 3.3 and FIG 8).
7. Check the air gap $s_{Lürated}$ near the bolts (10) by means of the thickness gauge ($s_{Lürated}$ see rated data table chapter 3.3 and FIG 8).

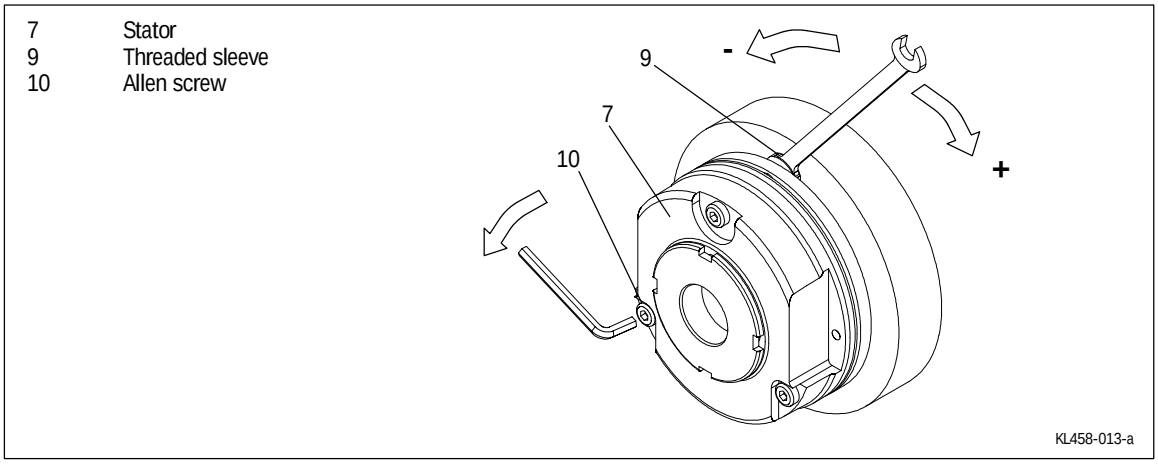

FIG 9

- If the air gap is too large, readjust $s_{Lürated}$ as follows:

8. Unbolt screws (10).
9. Slightly turn threaded sleeve (9) using a spanner.
   - If the air gap is too large, screw them into the stator (7).
   - If the air gap it too small, screw them out of the stator (7)
   - $^1/_6$ turn changes the width of the air gap by approx. 0.15 mm.
10. Tighten the screws (10) (for torques see chapter 3.3).
11. Check air gap again and if necessary, repeat the adjustment.

4.3.3 Assembly of the friction plate sizes 06 to 16

12	Friction plate
15	Endshield

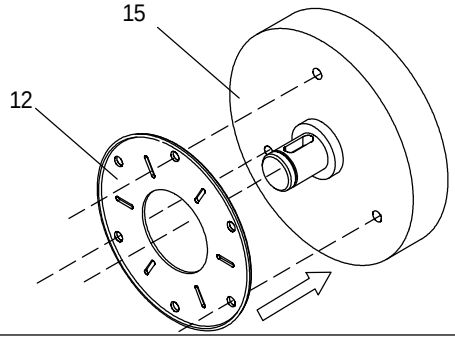

FIG 10 Assembly of friction plate

1. Hold the friction plate (12) against the endshield.
2. Check the pitch circle and the threads of the fastening bore holes.

The lip edge must lie a way from the mounting surface.

4.3.4 Assembly of the flange

- The flange (6) can be screwed onto the endshield (15) with the outer pitch circle (for screw dimensions see chapter 3.3).

Flange assembly with additional screws

Stop!

- Behind the thread holes for the screws in the flange there must be clearing holes in the endshield. (see chapter 3.3). Without clearing holes the minimum rotor thickness cannot be used. Under no circumstances may the screws be pressed against the endshield.
- For sizes 18 and 20 the threads at the fastening surface are shifted by 30° with respect to the center axis of the manual release lever.

6	Flange
10.1	Set of fastening screws
15	Endshield

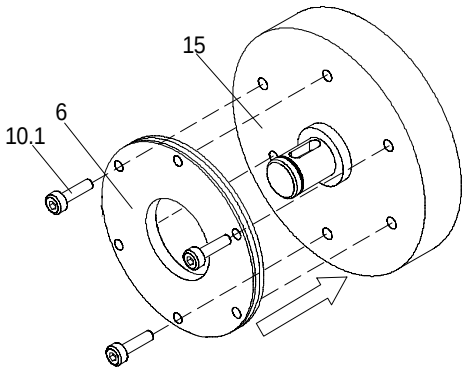

FIG 11 Assembly of the flange

1. Hold the flange (6) to the endshield (15) and check the pitch circle and the threads of the fastening bore holes.
2. Screw the flange (6) onto the endshield (15) using the screws (10).
3. Tighten the screw evenly (for torques see chapter 3.3).
4. Check the height of the screw heads. On the outer pitch circle the screw head must not be higher than the minimum rotor thickness. We recommend to use screws according to DIN6912 (for dimensions see chapter 3.3).

Flange assembly without additional screws
(not possible with sizes 18 and 20)

Stop!
When dimensioning the thread depth in the endshield you must consider the permissible wear (see chapter 3.3).

1. Hold the flange (6) to the endshield (15) and check the pitch circle and the threads of the fastening bore holes.
2. Assemble the brake with the corresponding screw set (see chapter 4.3.2).

4.3.5 Assembly of the cover seal

1	Armature plate
7	Stator
10	Socket head screw
12	Friction plate
13	Cover seal
15	Endshield

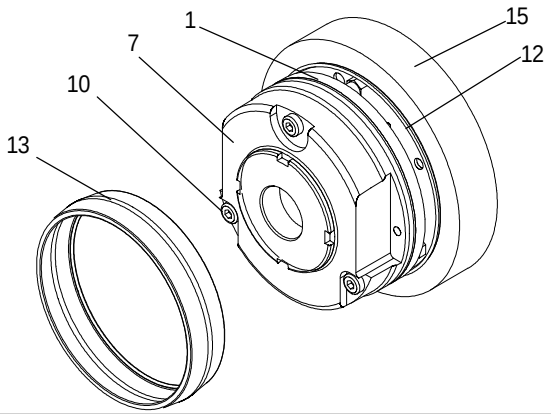

1	Armature plate
6	Flange
7	Stator
10	Socket head screw
12	Friction plate
13	Cover seal
15	Endshield

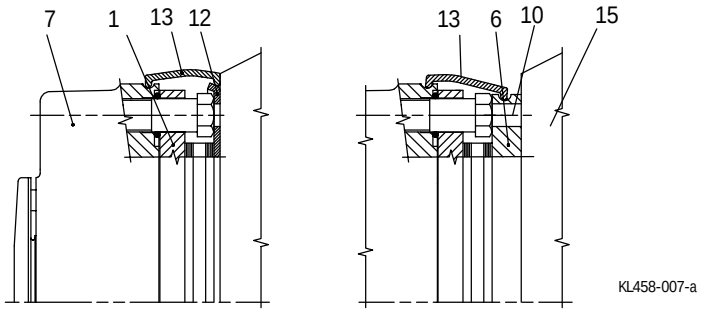

1. Pull the cable through the seal (13).
2. Push the seal (13) over the stator (7).
3. Press the lips of the cover seal (13) into the groove of stator (7) and flange (6).

4.3.6 Assembly of the manual release sizes 06 to 14

3	Rotor
4	Hub
7	Stator
14.1	Manual-release
14.2	Spring
14.3	Washer
14.4	Hexagon screw

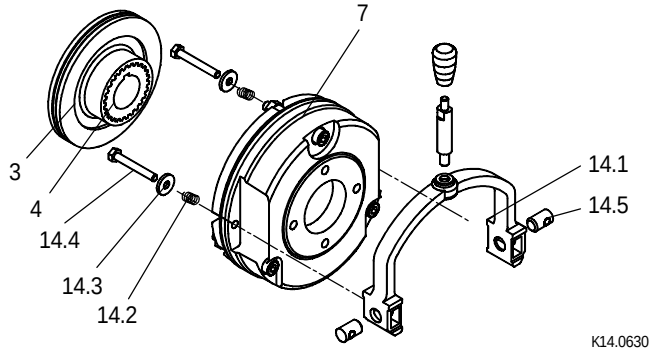

4.3.7 Assembly of the manual release sizes 16 to 25

3	Rotor
4	Hub
7	Stator
14.1	Manual-release
14.2	Spring
14.3	Washer
14.4	Hexagon screw

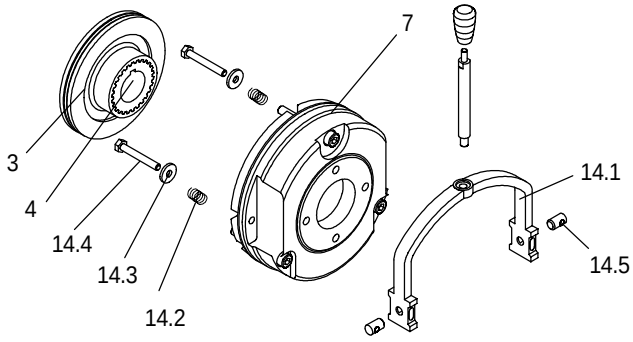

1. Insert the compression springs (14.2) into the bore holes of the armature plate.
2. Push the bolts (14.4) through the washers (14.3).
3. Push the screws and washers (14.4 and 14.3) through the compression springs (14.2), armature plate (1) and stator (7).
4. Locate the trunnions (14.5) in the shackle (14.1).
5. Screw the hexagon screws (14.4) into the trunnions (14.5) in the shackle (14.1).
6. Tighten hexagon screws (14.4) until armature plate (1) moves towards stator (7).
7. Remove and discard chips.

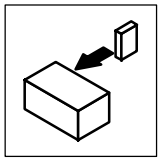

8. Adjust the gap between the armature plate (1) and the stator (7) using the hexagon screws (14.4) to achieve dimension S + $S_{Lü}$ (for values see TAB 5).
9. Assemble brake as per chapter 4.3.2.
10. Check and re-adjust (if necessary) gaps S and $S_{Lü}$ with hexagon screws (14.4). For values see TAB 5.
11. After assembly of the protection cover (if fitted) screw the lever and knob into the shackle (14.1) and tighten to specified torque (see chapter 3.3).

	Size	$s_{Lü}$ (mm)	$s^{+0.1}$ (mm)	s + $s_{Lü}$ (mm)
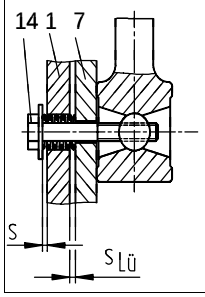	06	0.2	1	1.2
	08			
	10			
	12	0.3	1.5	1.8
	14			
	16			
	18	0.4	2	2.4
	20			
	25	0.5	2.5	3

TAB 5 Adjustment setting for manual release

Values S and $S_{Lü}$ only apply to the brake in the assembled state with the coil deenergized.

Stop!
Dimension “s” must be observed! Check air gap “$s_{Lü}$”.

4.4 Electrical connection

Warning!
The brake must only be electrically connected when no voltage is applied.

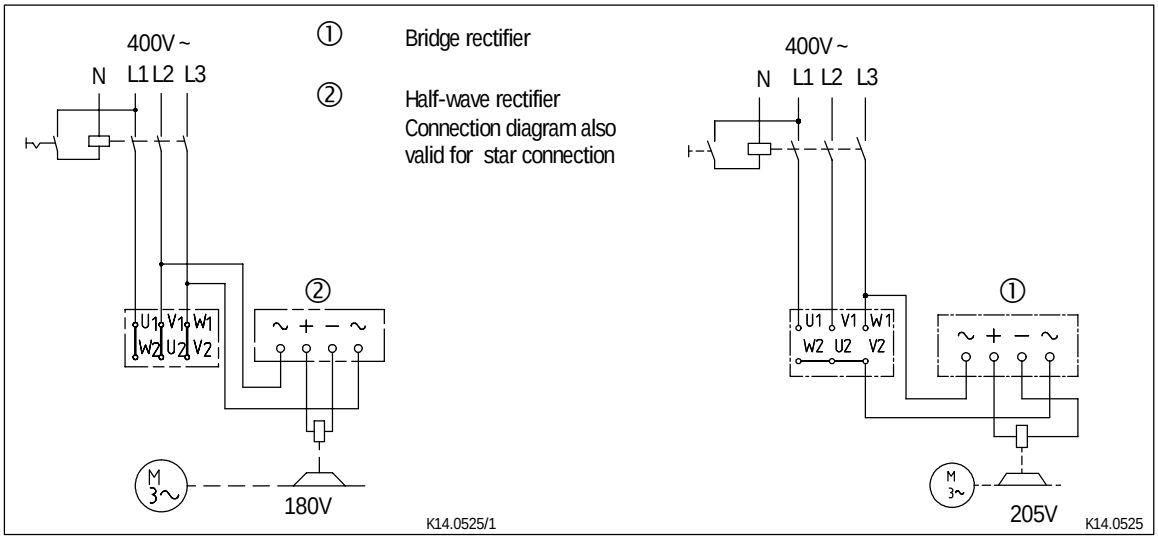

FIG 12 Switching in parallel to motor, extremely delayed engagement

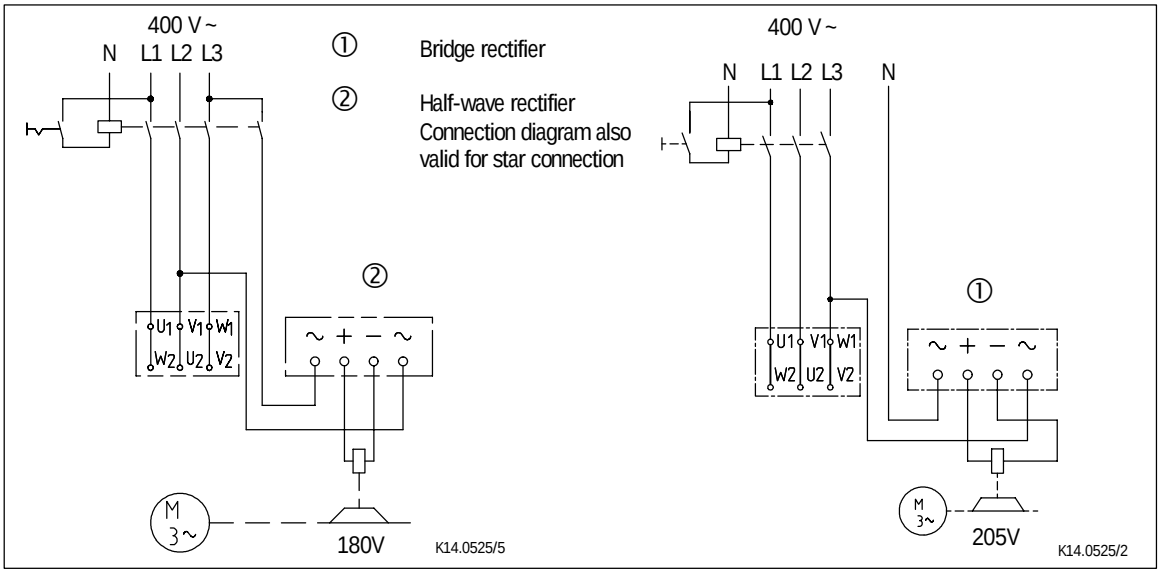

FIG 13 AC switching, delayed engagement

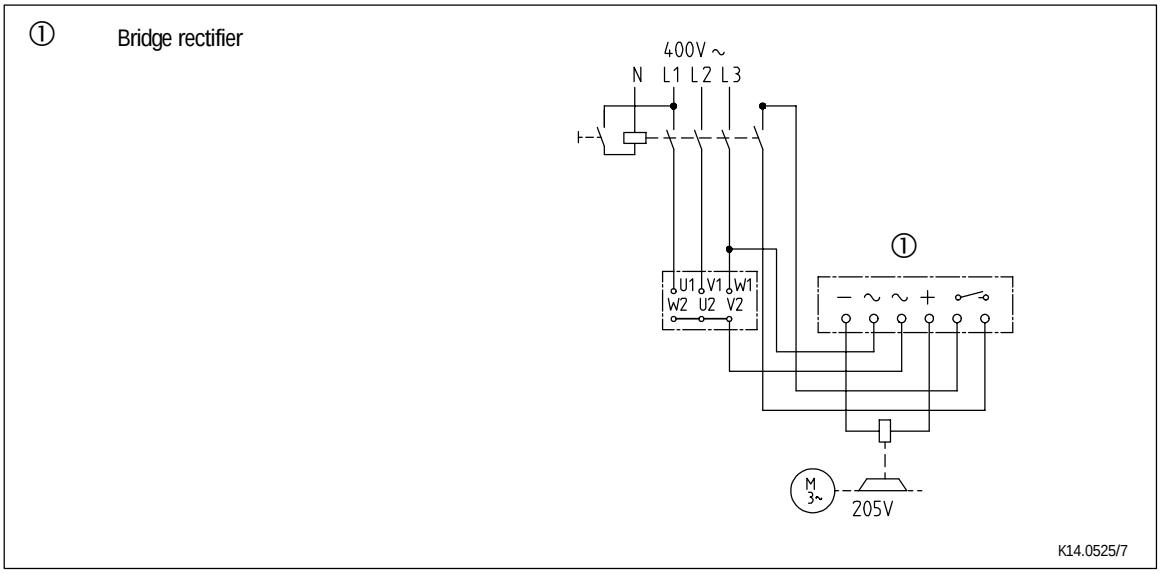

FIG 14 DC switching, normal engagement

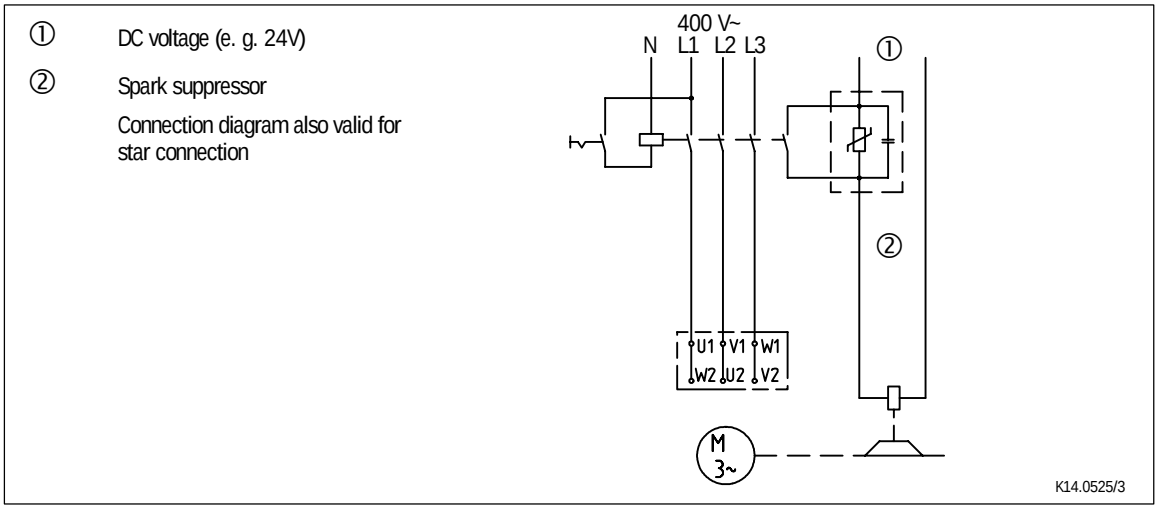

FIG 15 Separated DC voltage, switching on the DC side

Stop!
For switching on the DC side the brake must be operated with a spark suppressor, to avoid impermissible overvoltages.

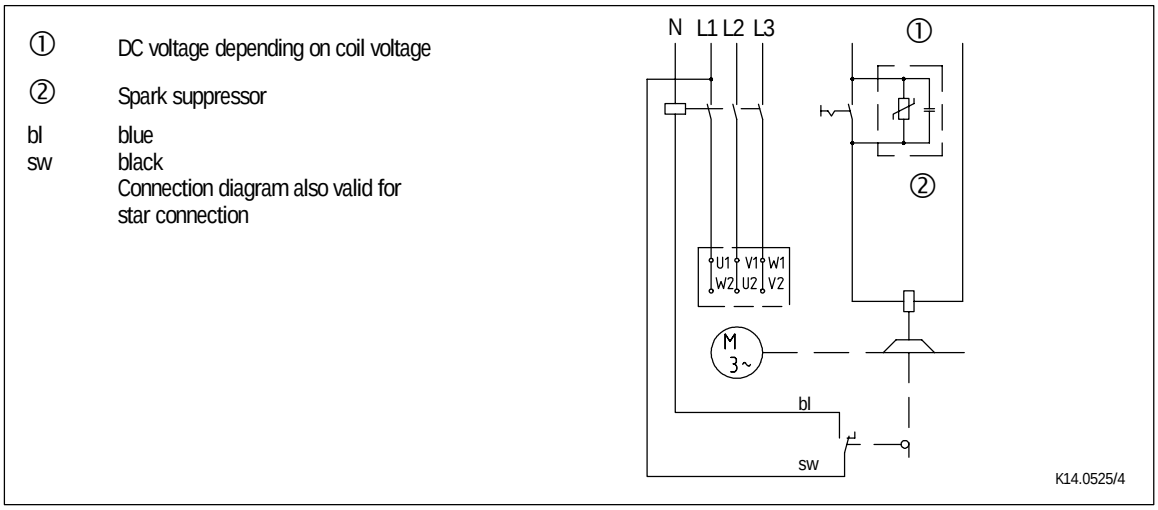

FIG 16 With microswitch / release check

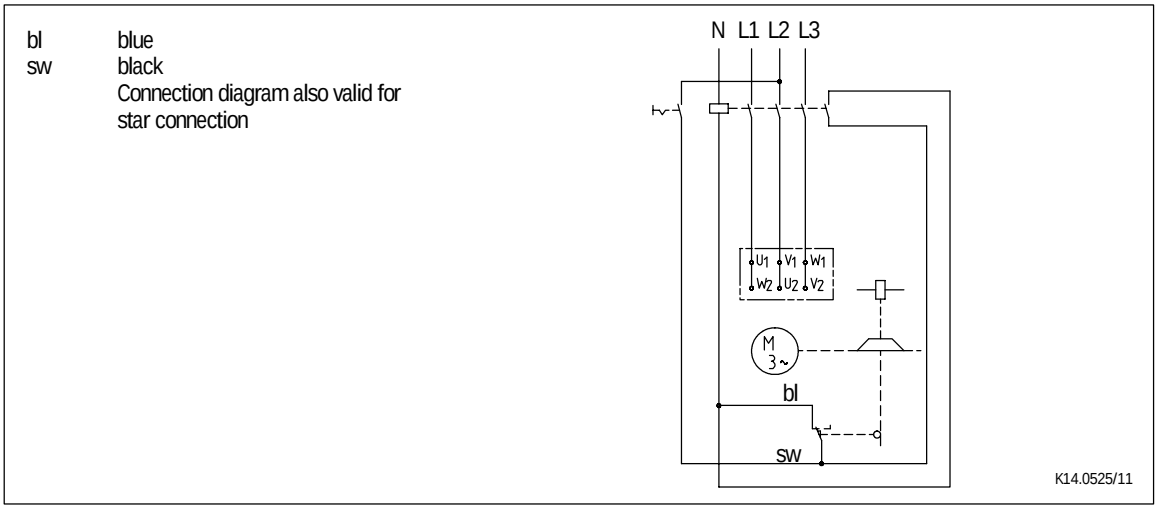

FIG 17 With microswitch / wear check addition for all circuits

Tip!

During operation according to fig. 17 the air gap is only monitored when no voltage is applied to the brake. This makes sense because it is possible that when the current flows only one side of the armature plate is attracted at first. This misalignment may cause a simulation of the maximum air gap and the actuation of the microswitch. If there is no closed contact in parallel to the microswitch contact, motor and brake will be switched off. The microswitch contact is closed again when the armature plate is completely released - the release is repeated again - because of the small difference-contact travel of the microswitch.

To avoid this misinterpretation of the microswitch signal, the signal should only be processed when no voltage is applied to the brake.

1. Install the rectifier in the terminal box. For motors with insulation class H, the rectifier must be installed in the control cabinet. The permissible ambient temperature for the rectifier is -25°C to +80°C
2. Compare the coil voltage of the stator (7) to the DC voltage of the installed rectifier.
3. Select the suitable circuit diagram. Convert the values to deviating AC voltage, e.g. with a 380 V bridge rectifier:

   380/400x205 = 195V

   Deviations up to 3% are tolerable.
4. Motor and brake must be wired according to the requirements of the engagement time. Special units are available for especially demanding requirements.

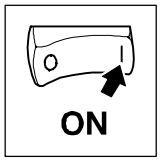

5 Commissioning and operation

Warning!
The live connections and the rotating rotor must not be touched!
The motor must not be connected when checking the brake.

5.1 Operational test

For faults see chapter 7 Troubleshooting and fault elimination.

5.1.1 Release / voltage check

For brakes without microswitch only

Warning!
The brake must be free of residual torque. The motor must not rotate.

Warning!
Live connections must not be touched.

1. Remove two bridges from the motor terminals. Do not switch off the DC brake supply. When connecting the rectifier to the neutral point of the motor, the PE conductor must also be connected to this point.
2. Connect the mains supply.
3. Measure the DC voltage at the brake.
4. Compare the DC voltage with the voltage indicated on the nameplate. A 10% deviation is permissible.
5. Check air gap $s_{Lü}$. It must be zero and the rotor must rotate freely.
6. Switch off the current.
7. Bolt bridges to the motor terminals. Remove additional PEN conductor.

5.1.2 Microswitch - release check

Warning!
The brake must be free of residual torque. The motor must not rotate.

Warning!
Live connections must not be touched.

1. Remove two bridges from the motor terminals. Do not switch off the DC brake supply.
2. Apply DC voltage to the brake.
3. Measure the AC voltage at the motor terminals. It must be zero.
4. Connect the mains supply for the brake.
5. Measure the AC voltage at the motor terminals. It must be the same as the mains voltage.
6. Measure the DC voltage at the brake.
7. Compare the DC voltage with the voltage indicated on the nameplate. A 10% deviation is permissible.
8. Check air gap $s_{Lü}$. It must be zero and the rotor must rotate freely.
9. Disconnect the mains supply.
10. Disconnect the DC voltage.
11. Bolt bridges to the motor terminals.

5.1.3 Microswitch - wear check

Warning!
The brake must be free of residual torque. The motor must not rotate.

Warning!
Live connections must not be touched.

1. Remove two bridges from the motor terminals. Do not switch off the DC voltage for the brake. When connecting the rectifier to the neutral point of the motor, the PE conductor must also be connected to this point.
2. Set air gap to $s_{Lümax}$. See chapter 4.3.2 Step 5-6.

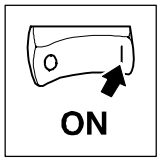

3. Disconnect the mains supply.
4. Measure the AC voltage at the motor terminals and the DC voltage at the brake. Both must be zero.
5. Disconnect the mains supply.
6. Set air gap to $s_{Lürated}$. See chapter 4.3.2 Step 5-6.
7. Disconnect the mains supply.
8. Measure the AC voltage at the motor terminals. It must be the same as the mains voltage.
9. Measure the DC voltage at the brake.
10. Compare the DC voltage with the voltage indicated on the nameplate. A 10% deviation is permissible.
11. Check air gap $s_{Lü}$. It must be zero and the rotor must rotate freely.
12. Do not switch off the DC brake current.
13. Bolt bridges to the motor terminals. Remove additional PEN conductor.

5.1.4 Manual release

This operational test is to be carried out additionally.

Warning!
The brake must be free of residual torque. The motor must not rotate.

1. Pull the lever (FIG 18) with approx. 150 N towards the motor until the resistances increase strongly.

Stop!
Additional tools to facilitate brake release are not allowed! (e.g. extension piece)

2. The rotor must rotate freely. Small residual torques are permissible.
3. Release the lever.

5.2 Decreasing brake torque (only for stators type E)

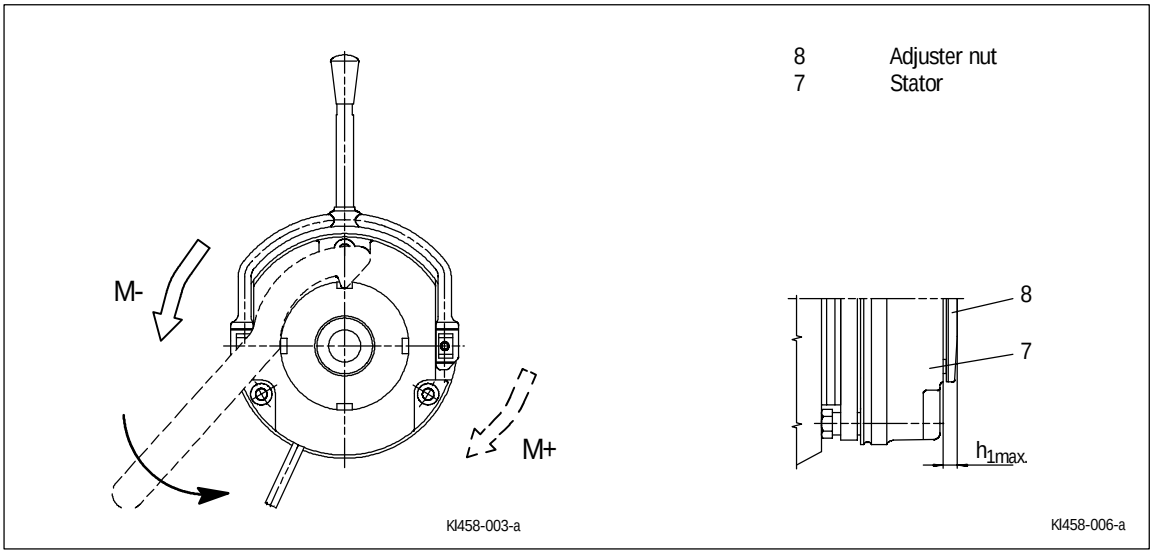

FIG 18

1. Turn the adjuster nut (8) counterclockwise using the hook wrench.

- Observe the notches. Position between notches are impermissible. (Values for the brake torque reduction see chapter 3.2.1).
- The maximum permissible projection h_{1max} of the adjuster nut (8) to the stator (7) are to be observed (values for h_{1max} see chapter 3.3).

Warnung!
The reduction of the brake torque does not increase the maximum permissible air gap $s_{Lümax}$.
Do not change the manual release setting for models with manual release.

5.3 During operation

- Check the brake regularly during operation. Take special care of:
  - unusual noises and temperatures
  - loose fixing elements
  - the state of the cables.
- In the event of failures, refer to the troubleshooting table in chapter 7 .If the fault cannot be eliminated, please contact the Lenze Service.

6 Maintenance / repair

6.1 Inspection intervals

The wear of the friction lining of the rotor depends of the operating conditions. The time until readjustment does not only depend on the friction work. The friction work per operation decreases steadily until readjustment takes place. High speed differences additionally reduce the friction work until readjustment. The inspection intervals must be adapted to the operating conditions and can be prolonged if the wear is small.

6.2 Inspections

6.2.1 Rotor thickness

Warning!
The motor must be at standstill when checking the rotor thickness.

1. Remove motor cover and - if mounted - remove seal.
2. Measure the rotor thickness using a caliper gauge. For brakes with friction plate: observe the flared flange at the outer diameter of the friction plate.
3. Compare the measured rotor thickness with the minimum permissible rotor thickness (see table Rated Data, chapter 3.3).
4. If necessary, replace the rotor. See chapter 6.3.2.

6.2.2 Air gap

Warning!
The motor must be at standstill when checking the air gap.

1. Measure the air gap $s_{Lü}$ between armature plate and stator using a feeler gauge.
2. Compare the measured air gap to the maximum permissible air gap $s_{Lümax}$ (see table Rated Data, chapter 3.3).
3. If necessary, adjust air gap to $s_{Lürated}$. See chapter 6.3.1.

6.2.3 Releasing / voltage

Warning!
The moving rotor must not be touched.

Warning!
Live connections must not be touched.

1. Observe air gap $s_{Lü}$ during operation of the drive. It must be zero.
2. Measure DC voltage at the brake during operation. It must be the same as the voltage indicated on the nameplate. A 10% deviation is permissible.

6.3 Maintenance

6.3.1 Readjustment of air gap

Warning!
Disconnect voltage. The brake must be free of residual torque.

Stop!
Mind the following when the model has a flange which is fixed with additional screws:
Behind the thread holes for the screws in the flange there must be clearing holes in the endshield. Without clearing holes the minimum rotor thickness cannot be used. Under no circumstances may the screws be pressed against the endshield.

1. Unbolt screws.
2. Screw the threaded sleeves into the stator by using a spanner. $^1/_6$ revolution reduced the air gap by approx. 0.15 mm.
3. Tighten screws (for torques see table Rated data, chapter 3.3).
4. Check the air gap $s_{Lü}$ close to the screws using a feeler gauge ($s_{Lürated}$ see rated data table chapter 3.3).
5. If the difference between the measured air gap and $s_{Lürated}$ is too large, repeat the readjustment.

6.3.2 Exchange rotor

Warnung!
Disconnect voltage. The brake must be free of residual torque.

1. Loosen connection cable.
2. Loosen the screws evenly and remove them.
3. Completely remove the stator from the endshield. Observe the supply cable.
4. Pull rotor from hub.
5. Check hub splining.
6. In case of wear, the hub must also be replaced.
7. Check the friction surface at the endshield. In case of strong scoring at friction plate or flange, replace the friction plate or flange. If scoring occurs at the endshield, re-finish end-shield or install a friction plate.
8. Measure the rotor thickness (new rotor) and head height of the threaded sleeves by means of a caliper gauge.
9. Calculate the distance between stator and armature plate as follows:

   Distance = Rotor thickness + $s_{Lürated}$ - head height

   ($s_{LüNenn}$ see rated data table chapter 3.3)

10. Loosen the threaded sleeves until the calculated distance between stator and armature plate is reached.
11. Install and adjust the new rotor and brake (see chapter 4.3.2).
12. Reconnect the supply cable.

6.4 Spare-parts list

Only parts with order numbers available.

The order numbers are only valid for standard versions.

6.4.1 Spare parts list for sizes 06 to 16

Pos.	Name	Variant	Order number for size					
			06	08	10	12	14	16
7	Stator complete, module E Stator complete, module N	Voltage / brake torque	398359	398360	398361	398362	398363	398364
3	Rotor (plastic) Rotor (aluminium)		384705 396186	387475 396200	----- 396202	----- 396214	----- 396215	----- 396252
4	Hub	Bore	372601	015350	015350	015351	028147	015352
10	Set of fastening screws Allen screw DIN 912	for installation at flange - for installation at motor / friction plate - for flange with through hole - for intermediate flange / double brake	399492 399500 399501 399545	399502 399504 399505 399546	399506 399507 399508 399546	399507 399509 399510 399547	399511 399512 399513 399548	399512 399513 399514 399549
13	Cover seal		116107	116144	116736	116145	120589	120590
14	Manual release		401229	401232	401233	401235	401236	401238
-----	Terminal box as attachment kit		-----	-----	-----	399940	399945	399950
6	Flange		397398	397513	397683	397747	397878	398426
	Flange hardchromed		399853	399854	399855	399856	399843	399844
12	Friction plate		397383	397514	076260	397734	397755	076264
-----	Tacho flange		395780	395781	395782	395783	395784	395785
-----	Intermediate flange / double brake		395791	395792	395793	395824	397085	397086
-----	Brake cover (enclosure acc. to IP65)		391548	391549	391550	391551	391552	391553

Position no. see fig. 19 page 42

6.4.2 Spare parts list for sizes 18 to 25

Pos.	Name	Variant	Order number for size		
			18	20	25
7	Stator complete, module E Stator complete, module N	Voltage / brake torque	398365	398366	398367
3	Rotor (aluminium)		396253	396280	396288
4	Hub	Bore	015345	015346	015347
10	Set of fastening screws Allen screw DIN 912	for installation at flange - for installation at motor / friction plate - for flange with through hole - for intermediate flange / double brake	399515 399516 ----- 399550	399517 399518 ----- 399551	399518 399520 ----- 399552
13	Cover seal		120591	120592	120593
14	Manual release		401239	401240	401241
-----	Terminal box as attachment kit		399954	399958	399962
6	Flange		398427	398428	398430
	Flange hardchromed		399845	399846	399847
12	Friction plate		-----	-----	-----
-----	Tacho flange		395786	395787	395788
-----	Intermediate flange / double brake		397088	397089	397090
-----	Brake cover (enclosure acc. to IP65)		391554	391555	391556

Position no. see fig. 19 page 42

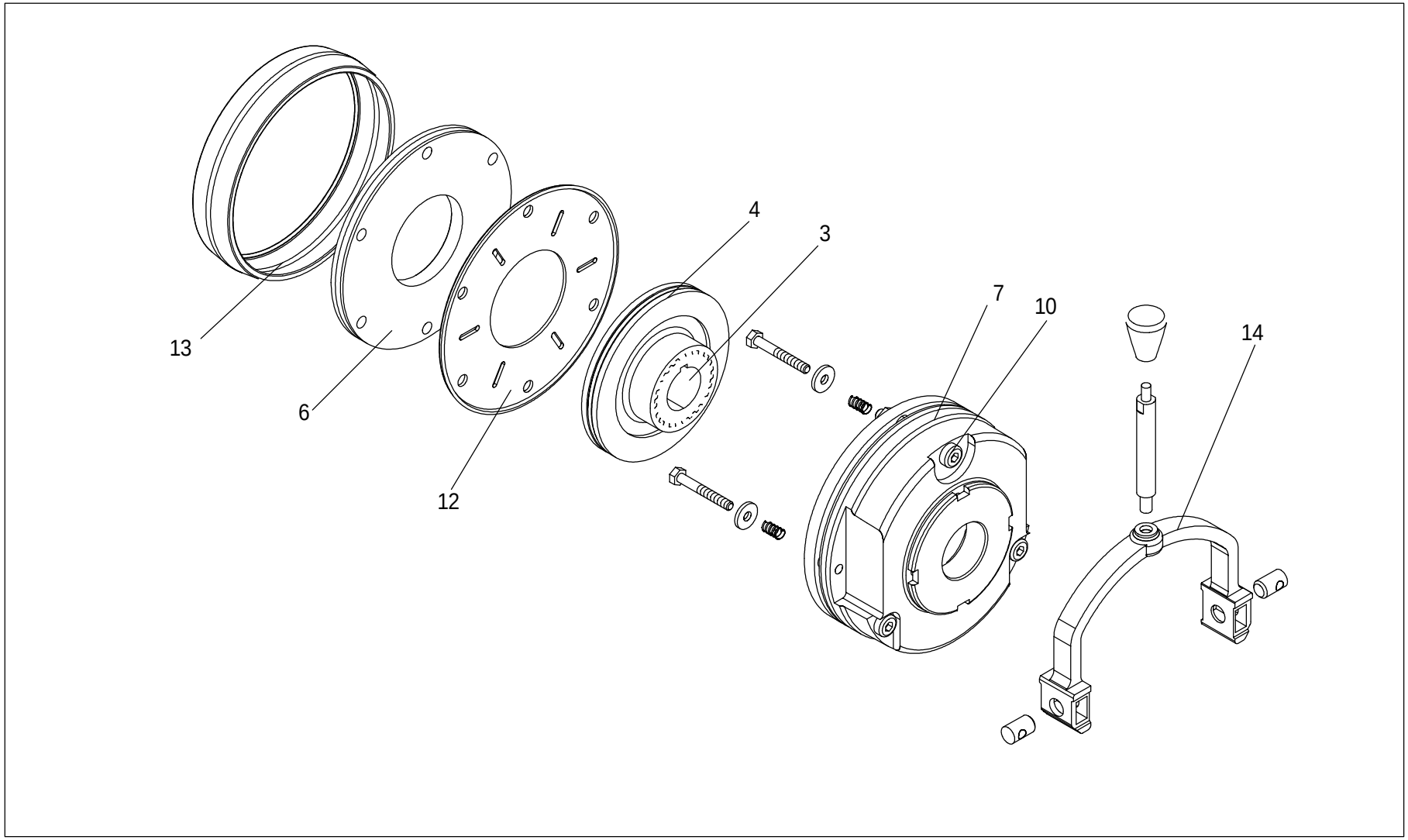

FIG 19 Spring-operated brakes BFK458-06 to 25

6.5 Order of spare parts

Receiver:

Lenze GmbH & Co. KG
Bremsen
Postfach 10 13 52
D-31763 Hameln
Fax: (+49) 51 54 - 82 11 07

Spring-applied brake BFK458 with accessories

Sender

Company _____ Customer No. _____

Street / P.O. box _____ Order No. _____

Postal code/ City: Issuer _____

Delivery address * _____ Phone _____

_____ Fax _____

Invoice addressee* _____

Date of delivery _____

*Please indicate, if different from sender Date_____ Signature _____

BFK 458-□□□ / Stator complete

Order quantity _____pcs.

Size ☐ **06** ☐ **08** ☐ **10** ☐ **12** ☐ **14** ☐ **16** ☐ **18** ☐ **20** ☐ **25**

Design ☐ **E** (with adjuster nut) ☐ **N** (without adjuster nut)

Voltage ☐ **24V** ☐ **96V** ☐ **103V** ☐ **170V** ☐ **180V** ☐ **190V** ☐**205V**

Brake torque _____Nm (see torque ranges)

Cable length ☐ **Standard**
_____ mm (from 100 mm to 1000 mm in steps of 100 mm,
from 1000 mm to 2500 mm in steps of 250 mm),

Hand release ☐ **mounted**

Armature plate ☐ **Standard**
☐hardchromed (as from size 14)
☐ low noise (O-ring design)
☐ with pole shim / brass film

Microswitch ☐ Monitoring of the operation (as from size 12)
☐ Wear monitoring (as from size 12)

Terminal box ☐ mounted (as from size 12)

Accessories

Rotor	☐ **Plastic** (only for size 06/08)	☐ **Aluminium**	☐ **low-noise version** (Rotor with sleeve)
Hub	_____mm (for bore diameter, see dimensions)		
Set of fixing screws	☐ for mounting to the flange ☐ for mounting to the motor / friction plate ☐ for flange with through hole (up to and incl. size 16) ☐ for intermediate flange / double brake		
Hand release	☐ as attachment kit		
Terminal box	☐ as attachment kit		
Flange	☐ Friction plate (up to size 16) ☐ Flange ☐ Tacho flange ☐ intermediate flange / double brake		
Sealing	☐ Seal ☐ Sealring (shaft diameter on request) ☐ Sealing cap ☐ Brake cover		

Electrical accessories

Bridge rectifier	☐ 4-pole without stud ☐ 4-pole with stud ☐ 6-pole vertical, integrated spark suppressor ☐ 6-pole horizontal, integrated spark suppressor
Half-wave rectifier	☐ 4-pole without stud ☐ 4-pole with stud ☐ 6-pole vertical, integrated spark suppressor ☐ 6-pole horizontal, integrated spark suppressor
Spark suppressor	☐

7 Troubleshooting and fault elimination

Fault	Cause	Remedy
Brake does not release, air gap is not zero	Coil is interrupted	• Measure the coil resistance using a multimeter: - If the resistance is too high, replace the entire stator.
	Coil has contact to ground or between the windings	• Measure the coil resistance using a multimeter: - Compare measured resistance to rated resistance. For values see rated data chapter 3.3. If the resistance is too low, replace the entire stator. • Check coil for contact to ground using a multimeter: - In case of contact to ground, replace the entire stator. • Check brake voltage (see defective rectifier, voltage too low).
	Wiring wrong or defective	• Check and correct wiring. • Check cable for continuity using a multimeter: - Replace defective cable.
	Rectifier defective or wrong	• Measure DC voltage at the rectifier using a multimeter: If DC voltage is zero: • Measure AC voltage at the rectifier. If AC voltage is zero: - Apply voltage, - check fuse, - check wiring If AC voltage is o.k.: - Check rectifier - replace defective rectifier If DC voltage is too low: - Check rectifier - Half-wave rectifier used instead of bridge rectifier. Install bridge-rectifier - If diode is defective, use suitable new rectifier. • Check coil for contact to ground or between the phases. • If rectifier defect occurs several times, replace the entire stator, even if a contact to ground or between the windings cannot be measured. The fault may occur only in the warm state.
	Incorrect wiring of microswitch	Check the wiring of the microswitch and correct it.
	Incorrect setting of microswitch	Replace the stator completely and complain to the manufacturer about the microswitch setting.
	Air gap too large	Readjust the air gap (chapter 6.3.1)

Fault	Cause	Remedy
Rotor cannot rotate freely	Incorrect adjustment of manual release	Check $s+s_{Lü}$ when current is applied to the brake. The value must be the same at both ends. Correct if necessary.
	Air gap $s_{Lü}$ too small	Check air gap $s_{Lü}$ and if necessary readjust it (chapter 6.3.1).
Rotor thickness too small	Rotor was not replaced in time	Replace rotor (chapter 6.3.2)
Voltage is not zero when checking the operation (6.2.2 or 6.2.3)	Incorrect wiring of microswitch	Check the wiring of the microswitch and correct it.
	Defective microswitch or incorrect setting	Replace the entire stator and return it to the manufacturer.
Voltage too high	Brake voltage does not match with rectifier	Adapt rectifier and brake voltage to each other.
Voltage too low	Brake voltage does not match with rectifier	Adapt rectifier and brake voltage to each other.
	Defective rectifier diode	Replace rectifier by a suitable new one.
AC voltage is not mains voltage	Fuse missing or defective	Select connection where fuse has not been removed and is o.k.
	Incorrect wiring of microswitch	Check the wiring of the microswitch and correct it.
	Defective microswitch or incorrect setting	Replace the entire stator and return it to the manufacturer.

Lenze

Brakes and clutches

Lenze GmbH & Co KG
Bremsen
Postfach 10 13 52
D-31763 Hameln

Site:
Wülmser Weg 5
D-31855 Aerzen
Telephone (05154) 82-0
Telefax (05154) 82-11 07

EG-Declaration of Conformity

for the purpose of the EC Low-Voltage Directive(73/23/EEC)

amended by: CE-mark Directive (93/68/EEC)

The following products were developed, designed, and manufactured in compliance with the above-mentioned EC Directive under the sole resposibility of

Lenze GmbH & Co KG Bremsen, Postfach 10 13 52, D-31763 Hameln

Product:	**Type:**		
Electromagnetically released spring-operated brakes	BFK454-□□ 14.442.□□ 14.449.□□	BFK457-□□ 14.444.□□ 14.450.□□	BFK458-□□ 14.448
Permanent-magnet brakes	14.118.□□		
Electromagnetic clutches	14.101.□□	14.105.□□	
Electromagnetic brakes	14.111.□□,	14.115.□□	
Clutch-brake units	14.137.□□ 14.810.□□ 14.852.□□ 14.856.□□ 14.863.□□ 14.867.□□	14.138.□□ 14.820.□□ 14.853.□□ 14.857.□□ 14.865.□□	14.800.□□ 14.830.□□ 14.855.□□ 14.862.□□ 14.866.□□

Applied standards and regulations:

VDE 0470 (EN 60529)	Rotating electrical machines
VDE 0580	Electromagnetic devices

Product:	**Type:**		
Rectifiers	14.630.13.□□ 14.630.33.□□	14.630.14.□□ 14.630.21.□□□	14.630.32.□□ 14.630.22.□□□
Spark suppressors	14.198.00.02.□□	14.198.00.03.□□	
SEGC-Contaxt	14.611.30.□□□	14.611.38.□□□	
SFast excitation devices	14.611.12.□□ 14.621.13.□□	14.611.14.□□ 14.621.14.□□	14.611.16.□□
Electronic switch devices	14.610.11.048	14.640.10.048	

Applied standards and regulations:

VDE 0411, Teil 1 (EN 61010-1)	Safety requirements for electrical equipment for measurement, control and laboratory use

Aerzen, June 14, 1999

Brendler

- - - - - - - - - - - - - - - - - - - -
(ppa.Brendler)
Head of Sales and R & D

Declaration of Conformity/Manufacturer's Certification

Lenze

Brakes and clutches

Lenze GmbH & Co KG
Bremsen
Postfach 10 13 52
D-31763 Hameln

Site:
Wülmser Weg 5
D-31855 Aerzen
Telephone (05154) 82-0
Telefax (05154) 82-11 07

Manufacturer's Certification

for the purpose of the EC Machinery Directive (98/37/EG)

We herewith certify that the below listed products are intended for assembly into a machine or for assembly with other elements fo form a machine. Commissioning of the machine is prohibited before it is proven that it correponds to the EC regulation 98/37/EC.

Product:	**Type:**		
Electromagnetically released spring-operated brakes	BFK454-□□ 14.442.□□ 14.449.□□	BFK457-□□ 14.444.□□ 14.450.□□	BFK458-□□ 14.448
Permanent-magnet brakes	14.118.□□		
Electromagnetic clutces	14.101.□□	14.105.□□	
Electromagnetic brakes	14.111.□□,	14.115.□□	
Clutch-brake units	14.137.□□ 14.810.□□ 14.852.□□ 14.856.□□ 14.863.□□ 14.867.□□	14.138.□□ 14.820.□□ 14.853.□□ 14.857.□□ 14.865.□□	14.800.□□ 14.830.□□ 14.855.□□ 14.862.□□ 14.866.□□

Applied standards and regulations:

VDE 0470 (EN 60529)	Rotating electrical machines
VDE 0580	Electromagnetic devices

Aerzen, June 15,1999

Brendler

- - - - - - - - - - - - - - - - - - - -

(ppa.Brendler)
Head of Sales and R & D